ALFA LU-VE

Alfa-V

Alfa-V single row VCM/VXM

Instruction manual

Product description
Product labels
Transport & lifting
Installation
Maintenance
Spare parts

ORIGINAL INSTRUCTIONS

30370162EN-02

LU-VE GROUP
leadership with passion

Index

1 Important information 3
1.1 Disclaimer 3
1.2 Intended use 3
1.3 Where to find product information 3

2 Product description 4
2.1 General information and application 4
2.2 Standard configuration 4
2.3 Options 4
2.4 Code description 4

3 Unpacking and lifting 5
3.1 Lifting from above 5

4 Installation 7
4.1 Mounting dimensions 7
4.2 Concrete mounting base 8
4.3 Vibration dampers 9
4.4 Installation layout guideline 10
4.5 Piping connections (condensers) 11
4.6 Electrical connections 12
4.7 Grounding 12

5 Operation 12
5.1 Start-up procedure 12
5.2 Shutdown 12

6 Maintenance 13
6.1 Periodic preventive controls 13
6.2 Cleaning 13
6.3 Tools and accessories 13
6.4 Fan replacement 14

7 Troubleshooting 15

Alfa LU-VE is a trademark registered and owned by LU-VE Group.
Alfa LU-VE reserves the right to change specifications without prior notification.

1 Important information

1.1 Disclaimer

This Instruction Manual applies to Alfa-V single row condensers and gas coolers and is supplied in combination with the Air Cooled Condenser and Gas Coolers Product Manual AHE00049. Both manuals must be carefully examined and instructions should be followed up at all times. Alfa LU-VE does not accept liability for any damage resulting from non-compliance to the instructions as given in the manuals and order-related documents.

1.2 Intended use

Condensers and gas coolers are partly completed machinery according to Machine Directive 2006/42/EC and intended for incorporation in cooling systems. Declarations of Incorporation are available on alfa.luvegroup.com. The units may not be put into operation until the conformity of the complete machine or cooling system has been declared according to the following standards and directives:

- Pressure Equipment Directive 2014/68/EU
- Machine Directive 2006/42/EC
- Low Voltage Directive 2014/35/EU
- Electrical Equipment of Machines IEC 60204-1
- Electro Magnetic Compatibility 2014/30/EU
- Any applicable local or national legislation

1.3 Where to find product information

Detailed technical data for individual product models are available in order related documents, on the product label and in product data sheets. Comprehensive technical information for all Alfa LU-VE air heat exchanger products is available on-line on alfa.luvegroup.com. This includes:

- Product manuals
- Instruction manuals
- Product leaflets & brochures
- Product data sheets (selection software)
- Dimensional drawings
- Electrical wiring diagrams
- Certificates

Alfa LU-VE offers world-wide service and support. In case of any questions or uncertainty please contact your local Alfa LU-VE representative. Contact addresses are available at alfa.luvegroup.com.

alfa.luvegroup.com/vxm

Alfa LU-VE is a trademark registered and owned by LU-VE Group.
Alfa LU-VE reserves the right to change specifications without prior notification.

2 Product description

2.1 General information and application

The Alfa-V single row series is a wide range of single fan row V-type condensers and gas coolers for commercial refrigeration and air conditioning. Alfa-V air-cooled condensers and gas coolers provide high capacities at a modest footprint.

- Refrigerants: HFC (VCM) or CO_2 (VXM)

2.2 Standard configuration

- Finned coil: the coil design based on small diameter copper tubes and corrugated aluminium turbo fins provides excellent heat transfer at a minimized refrigerant charge. Standard fin spacing 2.1 mm.

- Fans: 1 to 6 fans, available in two fan diameters (ø 800 mm & ø 910 mm) and different noise levels. ErP compliant AC & EC fan motors, protection class IP54 according to DIN 40050.
  AC power supplies 400/50/3 and 460/60/3 with integrated thermal protection by thermo contacts provides reliable protection against thermal overload. EC power supply 400/50/3. Motors are wired to one or more common terminal boxes. Separated fan sections are provided.
- Casing material is galvanized steel sheet, pre-painted with an epoxy finish (RAL9002). Separated fan sections.
- Stickers indicate fan direction and refrigerant in/out.

2.3 Options

- Non-standard fin spacing (up to 3.0 mm)
- Coil corrosion protection:
  - Epoxy coated aluminium fins (EP)
  - F-coat (FC)
- Vibration dampers (VD)
- Special fan motors:
  - Protection class IP55
  - High-temperature motors
- Electrical accessories:
  - Switch on/off (SW)
  - EC Motors wired to a common terminal box (CBP)

2.4 Code description

VXM	S	80	2	B	D	*		*	-	AL	2.1	K65	*
1	2	3	4	5	6	7		8		9	10	11	12

1 Alfa-V single row (VCM=condenser, VXM=gas cooler)
2 Sound level/fan code (T=turbo, S=standard, L=low, Q=quiet, R=residential)
3 Fan diameter (80=800 mm, 90=910 mm)
4 Number of fans (1 to 6)
5 Tube rows code (A, B, C)
6 Fan motor connection (D=delta, Y=star)
7 Number of circuits (VXD only)
8 Electrical accessories
9 Fin material (AL=aluminium, EP=epoxy coated aluminium, FC=F-coat, CU=copper)
10 Fin spacing (2.1, 2.5, 3.0 mm)
11 Tube material (K65= K65 copper)
12 Options

Alfa LU-VE is a trademark registered and owned by LU-VE Group.
Alfa LU-VE reserves the right to change specifications without prior notification.

3 Unpacking and lifting

Always follow guidelines and instructions as given in the air cooled condensers & gas coolers product manual AHE00049.
Before lifting the unit, check the weight stated on the name plate, located on the inlet connection side. Verify that the lifting equipment supports the unit weight plus 10%.

When forklifts are used, forks must be fully insertedunder the unit.
Coolers can be delivered either on standard trucks or in containers.

3.1 Lifting from above

Verify that lifting lugs are safely fixed to the unit and have no signs of damage. Attach the belts or hooks only to the lifting lugs as shown in the drawing on the next page.

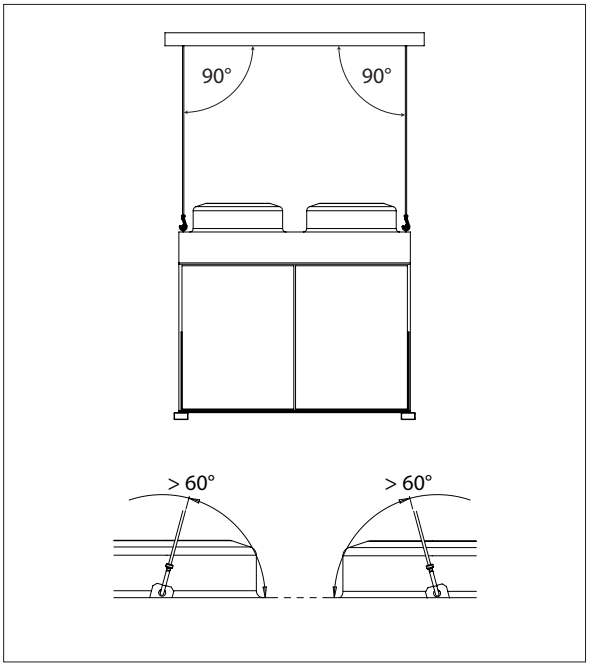

Angle of chains as shown for all models.

Load on the lifting chains shall be equally distributed on all the lifting points. If one chain is not fully loaded another chain will be extra loaded. This is not allowed.

Alfa LU-VE is a trademark registered and owned by LU-VE Group.
Alfa LU-VE reserves the right to change specifications without prior notification.

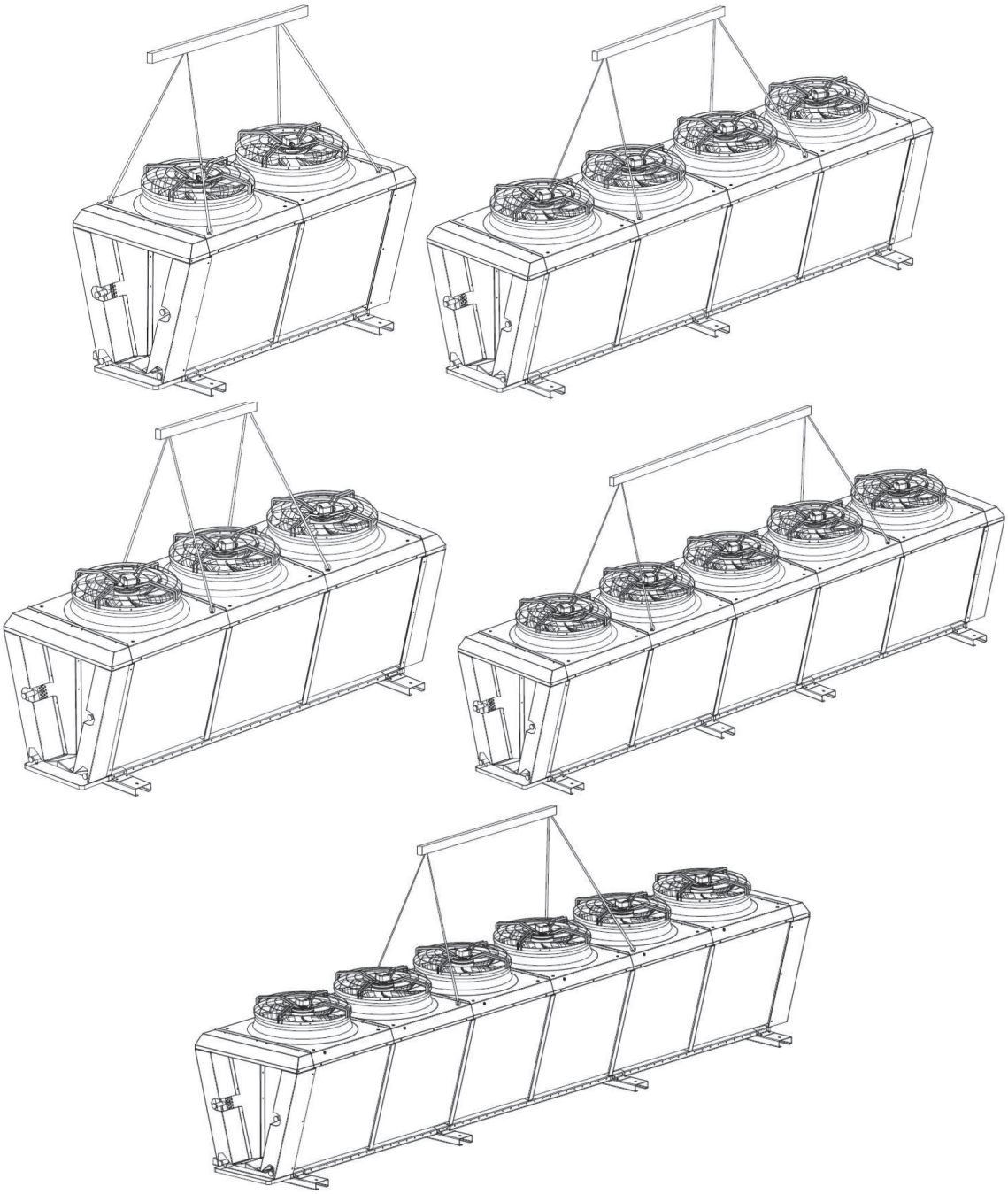

Alfa LU-VE is a trademark registered and owned by LU-VE Group.
Alfa LU-VE reserves the right to change specifications without prior notification.

4 Installation

Always follow guidelines and instructions as given in the condenser & gas cooler product manual AHE00049.

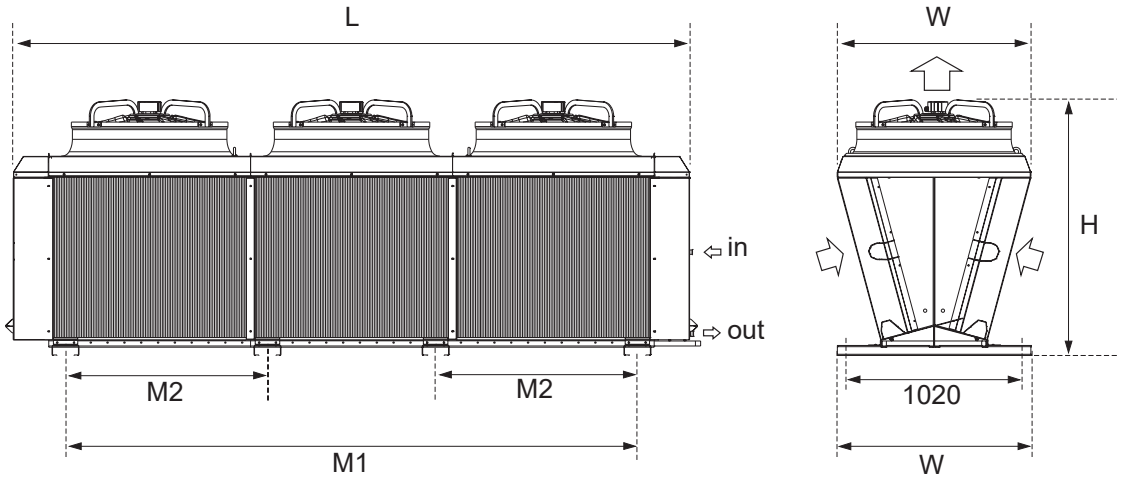

Fans diameter Ø	Fans	Transport dimensions			Weight	Mounting channels*		
		Length L	Height H	Width W			M1	M2
mm	no.	mm	mm	mm	Kg	no.	mm	mm
800	1	1635	1451	1150	230	2	800	-
800	2	2635	1451	1150	393	2	1800	-
800	3	3635	1451	1150	557	4	2800	800
800	4	4635	1451	1150	721	4	3800	1000
800	5	5635	1451	1150	885	4	4800	1800
800	6	6635	1451	1150	1049	4	5800	1800
910	1	1836	1520	1150	260	2	1000	-
910	2	3036	1520	1150	480	2	2200	-
910	3	4236	1520	1150	700	4	3400	1200
910	4	5436	1520	1150	920	4	4600	1300
910	5	6636	1520	1150	1140	4	5800	2200

* Adjustable mounting channels (steps 100 mm)

4.1 Mounting dimensions

Drawings showing all required mounting and refrigerant connection dimensions are available for download on alfa.luvegroup.com.

Dimensional drawings
Alfa-V VXM

Alfa LU-VE is a trademark registered and owned by LU-VE Group.
Alfa LU-VE reserves the right to change specifications without prior notification.

4.2 Concrete mounting base

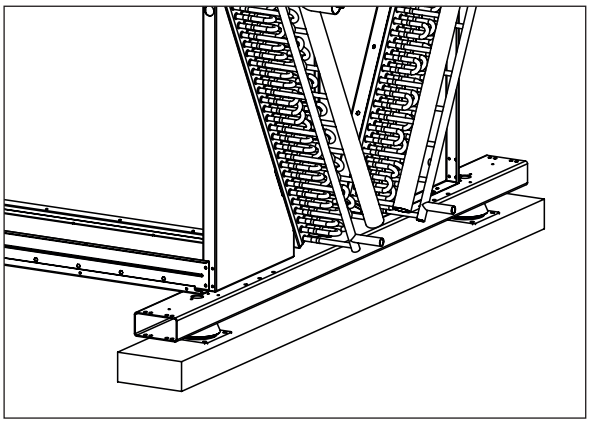

To avoid oxidation of the equipment feet, it is strongly recommended to mount the heat exchanger on concrete mounting bases. One base for each foot. Base minimum dimensions are 100 mm height and 50 mm exceeding the feet width.

Alfa LU-VE is a trademark registered and owned by LU-VE Group.
Alfa LU-VE reserves the right to change specifications without prior notification.

4.3 Vibration dampers

For active and passive isolation of vibrations and reducing noise transmission, Alfa LU-VE strongly recommends the installation of vibration dampers. Installation of vibration dampers must be carried out before positioning the unit. Vibration dampers are to be positioned between the unit feet and the mounting base with the supplied screws.

Code	Screw	Weight min daN	Weight max daN
30365821	M10	-	200
30365820	M12	210	335

30365821

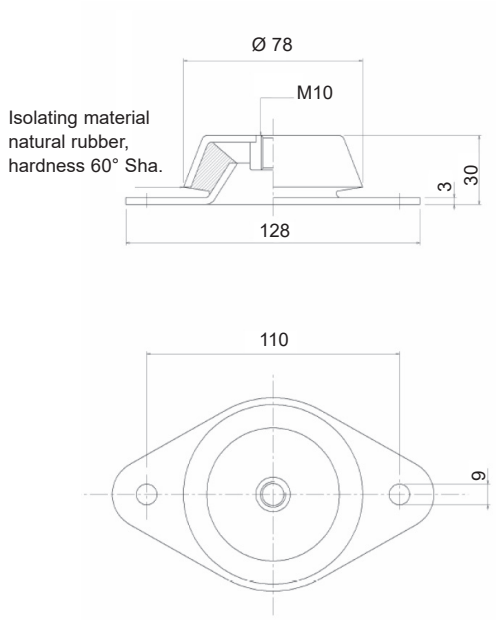

30365821

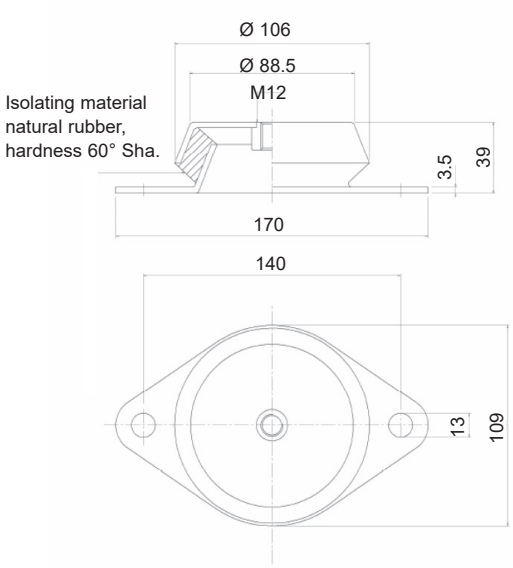

Material

- Isolator: natural rubber 60° Sha
- Frame: galvanized steel with yellow zinc treatment

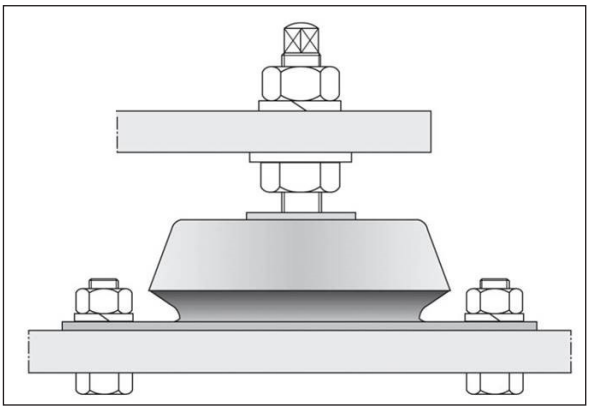

Picture shows an installation example using threaded bar, nut, grower washer, washer and locknut (not supplied).

This way vibration dampers can be used to make the cooler level adjusting the locknut. This is particularly useful with long units or irregular basement.

Alfa LU-VE is a trademark registered and owned by LU-VE Group.
Alfa LU-VE reserves the right to change specifications without prior notification.

4.4 Installation layout guideline

Ensure installation is such that the following conditions are met:

- Place the unit outdoor, so that it can be monitored and controlled from all sides at all times.
- Ensure that sufficient space is available for maintenance.
- Verify the structures supporting capacity regarding the weight of the unit(s), including refrigerant.

Place the cooler so that air can pass freely over the entire coil surface and if possible so that the wind direction does not affect the evacuation air, otherwise re-circulation might occur. This applies particularly to models that have low revs. See measurement indications below.
In case of doubt, to determine optimal unit spacing for specific conditions on site please contact your Alfa LU-VE representative for advise.

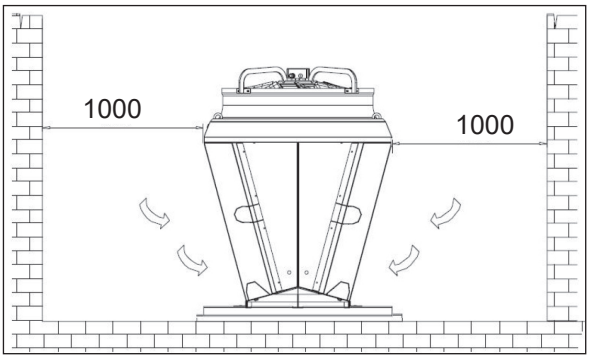

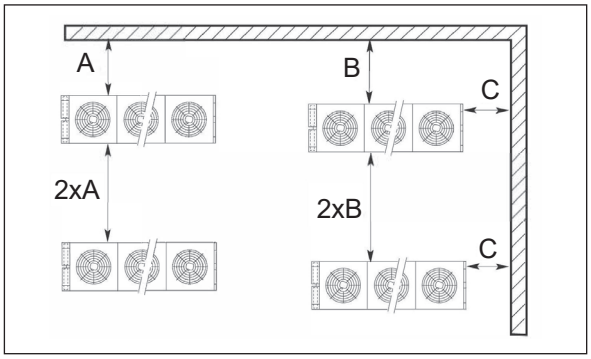

Fan diameter mm	A mm	B mm	C mm
800	800	1000	500
910	900	1100	500

Alfa LU-VE is a trademark registered and owned by LU-VE Group.
Alfa LU-VE reserves the right to change specifications without prior notification.

4.5 Piping connections (condensers)

The equipment is delivered with the following connections BW Type Cooper tube connection for welding.

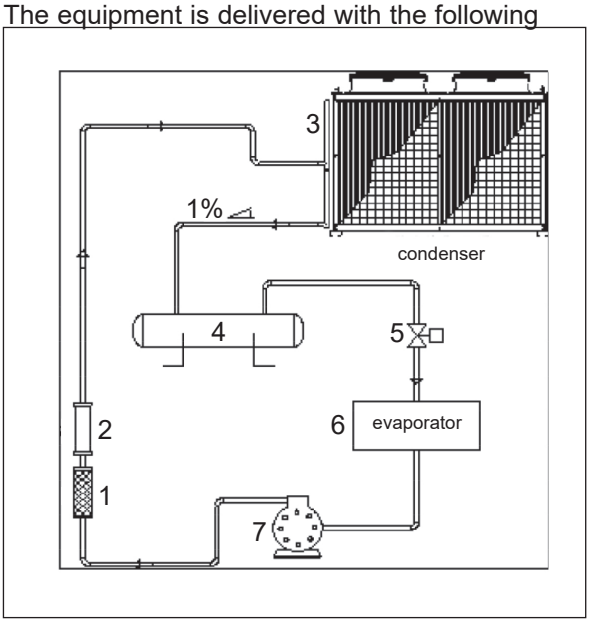

The diagram shows the recommended installation:

1. Anti-vibration device.
2. Silencer.
3. Condenser.
4. Liquid receiver.
5. Thermal expansion valve.
6. Evaporator.
7. Compressor.

Size the pipes to minimize the pressure drop and to obtain the coolant speed values to assure the oil drifting. In the drive line, between the compressor and the condenser, install an anti vibration device (1) and a silencer (2) to reduce the noise and vibration transmission along the line.
Ensure that the line for liquid should have a minimum gradient of 1%, between the liquid discharge and the receiver.

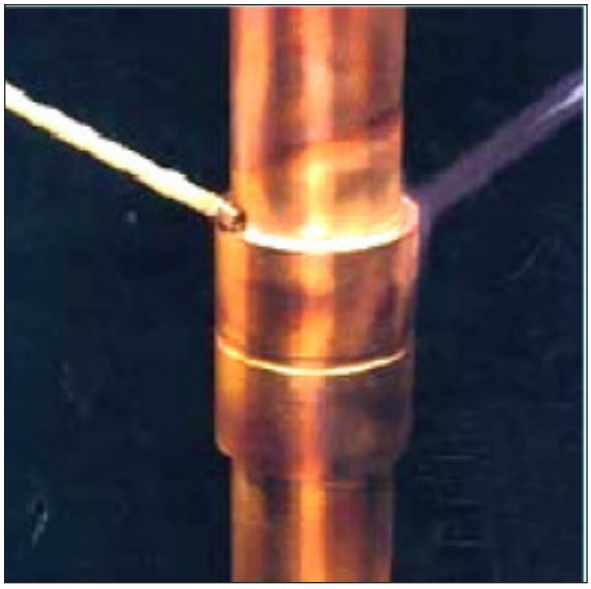

Before making the connections, verify the presence of the preloaded nitrogen for the dry maintenance of the circuit. In the multi-circuit condensers the refrigerating lines goes from the LEFT to the RIGHT (H version) or from above to down (V version).

Before making the welding, disassembly the cap-label of the ½” gas valve and eliminate the preloaded nitrogen completely.
To weld the external piping to the equipment, (cooper pipes) an overlapped welding is suggested, for the double purpose of assuring the staunchness and reducing the breaking risks in the welded area, generated by inducted vibrations.
If the diameter of the pipes don’t allow this solution, special female threaded unions should be used.

Alfa LU-VE is a trademark registered and owned by LU-VE Group.
Alfa LU-VE reserves the right to change specifications without prior notification.

4.6 Electrical connections

The following data determine which connection diagram is to be selected and respected for electrical installation:

- Heat exchanger model indication
- Fan motor type
- Electrical accessories

Electrical connection diagrams are available for download on alfa.luvegroup.com. When in doubt always contact your local Alfa LU-VE representative for assistance.

Electrical connections
Alfa-V VXM

4.7 Grounding

The ground connection is required by law.
The ground connection shall be made through a cable from the motor's frame to the equipment structure and from structure to the plant ground.
Ground resistance should be lower than 3 Ω.

5 Operation

5.1 Start-up procedure

The following procedure is to be respected at every system start-up.

- Verify there are no leaks in the refrigerant circuit and connections.
- Switch on fan power supply.
- Start the fans and verify fan direction.
- After some operating time, verify that current absorbtion does not exceed the value as given in the technical specifications.

5.2 Shutdown

If the unit requires emptying for maintenance, system shutdown or dismounting, proceed as follows:
Stop refrigerant supply and switch off electrical power supply.

- Make sure neither refrigerant nor power supply can be resumed accidentally or unexpectedly.
- Drain all liquid refrigerant into a suitable vessel.
- Evacuate the coil to remove any remaining refrigerant gas.

Alfa LU-VE is a trademark registered and owned by LU-VE Group.
Alfa LU-VE reserves the right to change specifications without prior notification.

6 Maintenance

Ensure complete electrical isolation before performing any maintenance activity and always follow guidelines and instructions as given in the condenser and gas cooler product manual AHE00049.

6.1 Periodic preventive controls

Every three months the following controls shall be performed:

- Check the equipment fastening.
- Verify that the electric connection terminal studs are properly tight, to avoid losses and wear due to sparks.
- Verify the good condition of the wiring (it should not have cuttings or deterioration signs).
- Check the electrical resistance of the ground connection (ohms).
- Use an ammeter to check that the current absorbed is equal to or slightly lower than the rated value when the fans works at rated speed.

If the equipment should remain without operation for long periods (three or more months), it is advisable to operate the fans, at least once per month, 3 to 4 hours each time.

6.2 Cleaning

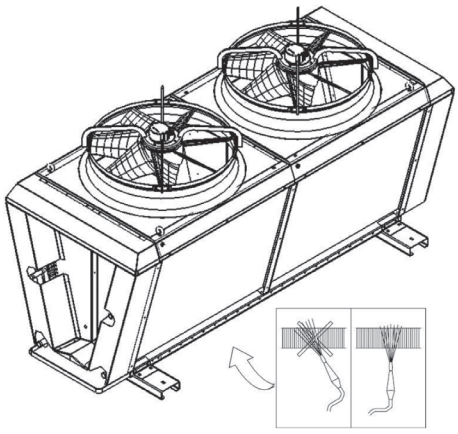

To guarantee the thermal efficiency of the equipment, it is necessary to eliminate the dirt deposited in the coils, on the suction side. A low pressure water jet or non aggressive liquids can be used.
A cleaning is recommended every three months, but this frequency shall be defined according with the environment where the equipment is installed.

6.3 Tools and accessories

- Open end or combination wrenches kit (millimeters): sizes from 10 to 20mm
- Open end or combination wrench kit (inches): sizes from ½” to 2”
- Adjustable wrench (3” opening)
- Oxyacetylene welding equipment
- Current clamp tester
- Voltmeter

Alfa LU-VE is a trademark registered and owned by LU-VE Group.
Alfa LU-VE reserves the right to change specifications without prior notification.

6.4 Fan replacement

- Open the connection box. Disconnect fan cabling.
- Unscrew fixing bolts and remove old fan.
- Mount new fan assembly in identical position. Remount fasteners. Use an anti-corrosion coating-like Geomet or comparable when remounting using new fixing bolts.
- Restore the electric connections (water trap as shown).
- Check for correct fan direction.

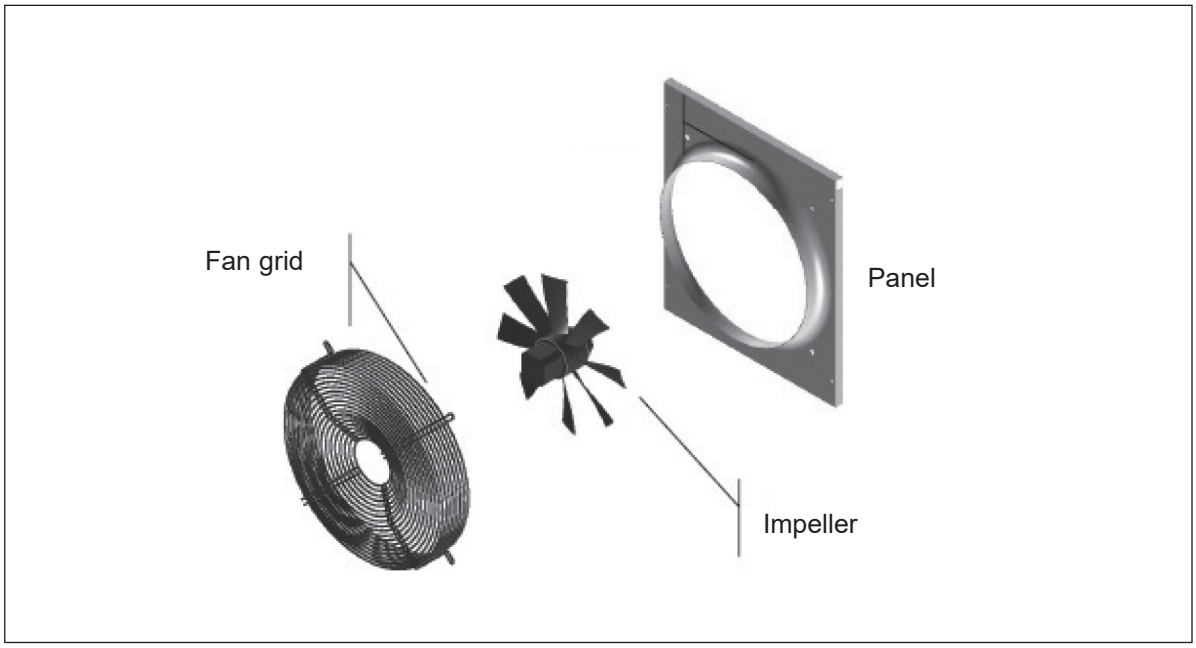

Alfa LU-VE is a trademark registered and owned by LU-VE Group.
Alfa LU-VE reserves the right to change specifications without prior notification.

7 Troubleshooting

Problem	Possible cause	Solution
Condensation pressure too high	Air flow to condenser blocked by dirt on the coil with fins	Clean the coil with water and a degreaser or non corrosive liquid
	Defective fan	Replace
	Wrong air flow direction through the coil	Invert the rotating direction of the fan, switching two of the three phases
Condensation pressure too low	Air temperature too low	Adjust the condenser pressure regulation
	Excessive air flow through the condenser	
Fans not running	Faulty motor	Replace
	Line voltage lower than tolerance limits	Check the voltage value between phases with a voltmeter.
	Lack of a phase	Measure the voltage between phases, check the power supply line
	Overloaded motor	Check with an Ammeter
Fan break	Blockage or shocked	Replace

Alfa LU-VE is a trademark registered and owned by LU-VE Group.
Alfa LU-VE reserves the right to change specifications without prior notification.

ALFA
LU-VE

alfa.luvegroup.com

LU-VE GROUP
leadership with passion