AlfaBlue Power BDP

Instruction manual

ORIGINAL INSTRUCTIONS

9460197852EN-01

Contents

General

To the user

Dear user,

This instructions' manual is intended to be your permanent guide for the different situations you may encounter when using this equipment.

Alfa LU-VE recommends you read it carefully, and mainly, to make it available for the personnel who normally install, operate and maintain the equipment.

This manual will be useless if cannot be reached by the personnel who may need it.

In the unlikely case that you may have some problem not contemplated in this manual, don't hesitate to contact the closest Alfa LU-VE's representative. We can offer you our help wherever you may be located.

NOTE

Alfa LU-VE won't become responsible for any equipment failure if the user misinterprets the instructions of this manual.

System Warranty

This equipment is designed to operate properly and produce rated capacity when installed in accordance with accepted industry standards. Failure to meet the following conditions may result in voiding of the system warranty:

1. System piping must be installed following industry standards for good piping practices.
2. System must be thoroughly leak checked and evacuated before initial charging.
3. Power supply to system must meet following conditions:
   a. All voltages must not exceed **±10%** of nameplate ratings. Voltage and frequency depend to the design parameters (please check the technical datasheet).
   b. Current absorption per phase imbalance not to exceed **2**%.
4. Factory installed wiring must not be changed without written Alfa LU-VE's approval.

FREEZING RISK

A standard dry cooler cannot be fully drained simply by opening the drain fitting orifices. Anyhow add the anti-cooling mix as further explained.

Safety

The hazardous operations and other important information are emphasized in this section.

The warnings are highlighted by means of special signs.

Always read this manual before using the equipment

ATTENTION	Indicate that special procedures must be followed to avoid serious injuries to people.
BE CAREFUL	Indicate that special procedures should be followed to avoid serious damages to the equipment.
NOTE	Indicate important information to simplify the operations or to make them more understandable.

Warning signs

In this page all the warning signs of this manual are summarized.

General precaution sign

Danger loads in movement sign

Danger parts in movement sign

Electrical danger sign

Important information

Pay attention to the following instructions to avoid serious injuries to people and / or damages to the equipment.

Operation for the transportation of the equipment

ATTENTION

Follow the present manual

Lifting Operation

ATTENTION

Before lifting the equipment

1. Attach the belts or hooks, only to the provided elements the equipment is equipped with.

2. Be sure that the belts or the slings with hooks will lift the equipment in a balanced way.

Installation and maintenance operations

ATTENTION

Before performing any maintenance operation, the power supply from the general board should be switched off, and the safety switch should be in the OFF position to avoid accidents.

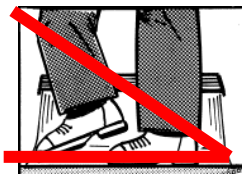

ATTENTION

For no reason, a person should walk or step over the equipment, since besides the damage, it can generate an accident or a risky situation.

ATTENTION

Whenever Fans maintenance task should be carried out, be sure they are not running, and the security switch is in the off position.

When the operation is completed, place back the corresponding protection.

Equipment description

Design

A finned cooling coil is mounted in a galvanized steel frame. Fans are mounted in one row on the top of the frame. The cooling coils are manufactured with 12 or 16 mm copper or stainless-steel tubes, which are inserted into a fin stack. The fin stack is manufactured with aluminum fins (or copper on request) with thermal optimized surface pattern. The standard spacing between the fins is 2.5 mm with matching fin thickness of 0.18 mm. The standard manifolds, made in copper or in stainless steel, are joining all the tubes into one inlet/outlet flange connection. Depending on the size of the manifolds (and on request) the flange dimension is available from DN 65 to 100 in PN 10 (PN 16 on request). The frame rests on steel feet. All the casing parts are in: Aluzink, hot dip galvanized steel or hot dip galvanized steel and double painted with primer and finished using high quality finish powder RAL 9006 paint; in alternative, the top horizontal casing and the fan cowls could be in steel plus hot dip galvanization treatment.

The standard fans used are of high quality and efficiency with Ø1260 or bigger in:PPG, PAG, aluminium or galvanized steel blades. The electric motors are IP55 8 poles (or 6 poles).

Application

The BDP is designed and customized for use in gas and diesel power plants, but also for combined heat and power generation and co-gen. In co-generation power plants, Alfa LU-VE Liquid Coolers are installed to cool the temperature of the returned cooling water from the external heat consumers, securing a constant cooling water temperature to the engine.

These Liquid Coolers can be installed direct or indirect; it all depends on the individual requirements. Power plants with closed circuit requirements, which are not distributing the waste heat directly from the “system” to the BDP, can connect the BDP indirectly using an intermediate plate heat exchanger between the engines and the Liquid Coolers.

The Alfa LU-VE air liquid coolers are suitable for many industrial purposes, including:

- Engine water cooling in gas, diesel, bio-diesel power generation plants
- Gas turbine cooling systems.
- Water-cooling
- Co-generation
- Direct or Indirect cooling of process liquids (using indirect system by Alfa LU-VE PHE)
- Oil cooling
- Steam (using indirect system by Alfa LU-VE PHE)

Working principle and operation

The fans force air to cross the coil of finned tubes, thereby cooling the tubes and the cooling water inside the tubes; exhaust warm/hot air is rejected by the fan impeller from the top.

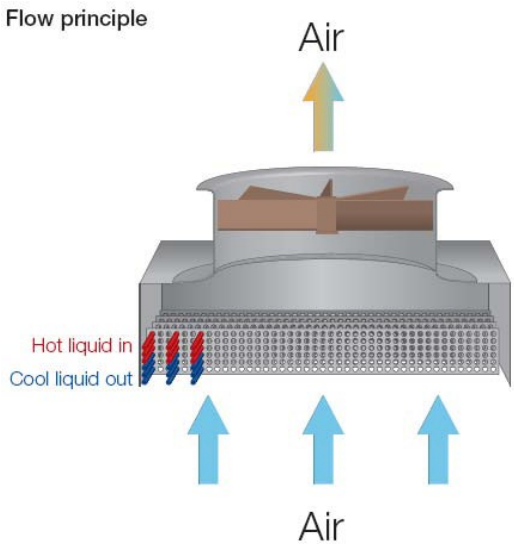

BDP cools directly or using a Plate Heat Exchanger.

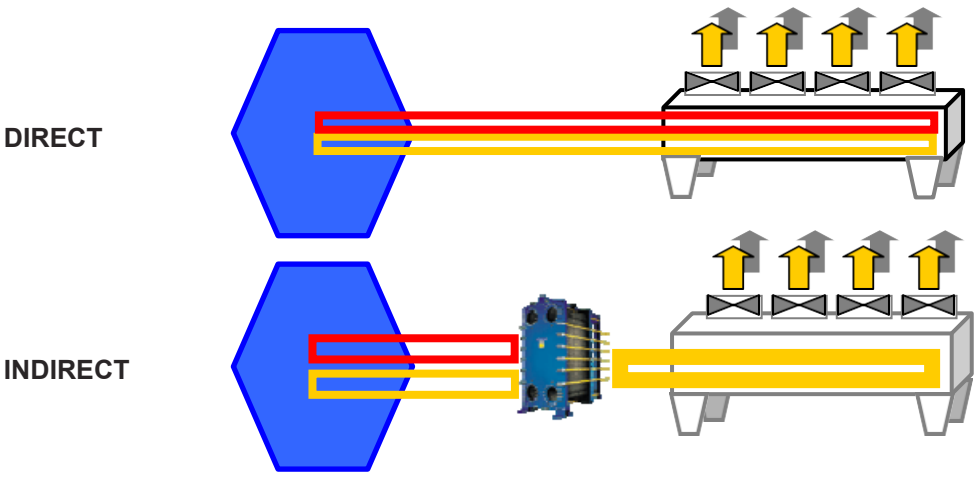

i.e.:

A typical cooling duty for a gas and diesel engine consists of a high temperature and a low temperature cooling circuit. The two circuits are connected with separate flanged connections in one Radiator unit or are placed in two depending on available space and noise requirements.

Temperature control can be done regulating the number of fans in operation and/or the speed of the fans using for example the frequency converter (see following info about the Freq. Converter use).

General design data range	**Standard (Component/Design)**	**Special (Component/Design)**
Air temperature (dry bulb) (°C)	-25 / 55	< -25
Ambient Relative Humidity (%)	40 / 95	> 95
Altitude (m a.s.l.)	0 - 500	> 500
Fluid temperature (°C)	< 110	< 120°C
Supply power (V/Hz)	400 / 50 or 460 / 60	400 / 60 or others
Materials: tubes / fins	Cu / Al	Cu / Alprv, SS / Al, SS / Alprv
El. Motor	3ph squirrel cage, 8 poles, IP55	6, 10 Poles or >IP55
Fan material	PPG / PAG	Galvanized steel, Aluminum
Casing	Aluzink and Hot dip galvanized Steel	Galvanized steel, powder painted

FLUIDS:

- Fluid generally is water or water including antifreeze concentration in relation to the minimum winter ambient temperature

- Fluids have to be not aggressive against copper (manifolds, tubes and bends are in copper).

NOISE:

The declared noise level in the datasheet is calculated at an indicated side distance, at 1,5 m from the ground level, considering the radiator installed at 5m height, without any obstacles or reflecting walls (buildings, piping, steel structures).

The sound data is calculated and should be used as a guideline only.

Code description

BDP	6	B	C	8-185	K	6	7.5	D	-	*
1	2	3	4	5	6	7	8	9		10

1 AlfaBlue Power liquid cooler
2 No. of fans (2 to 8)
3 LT coil dimension (B, C)
4 HT coil dimension (B, C)
5 Model size
6 Fan diameter (K=1440 mm)
7 No. of fan motor poles (6, 8, 10)
8 Nominal installed fan motor power (kW)
9 Fan motor connection (D=delta, Y=star)
10 Options

Drawings

Model Example:

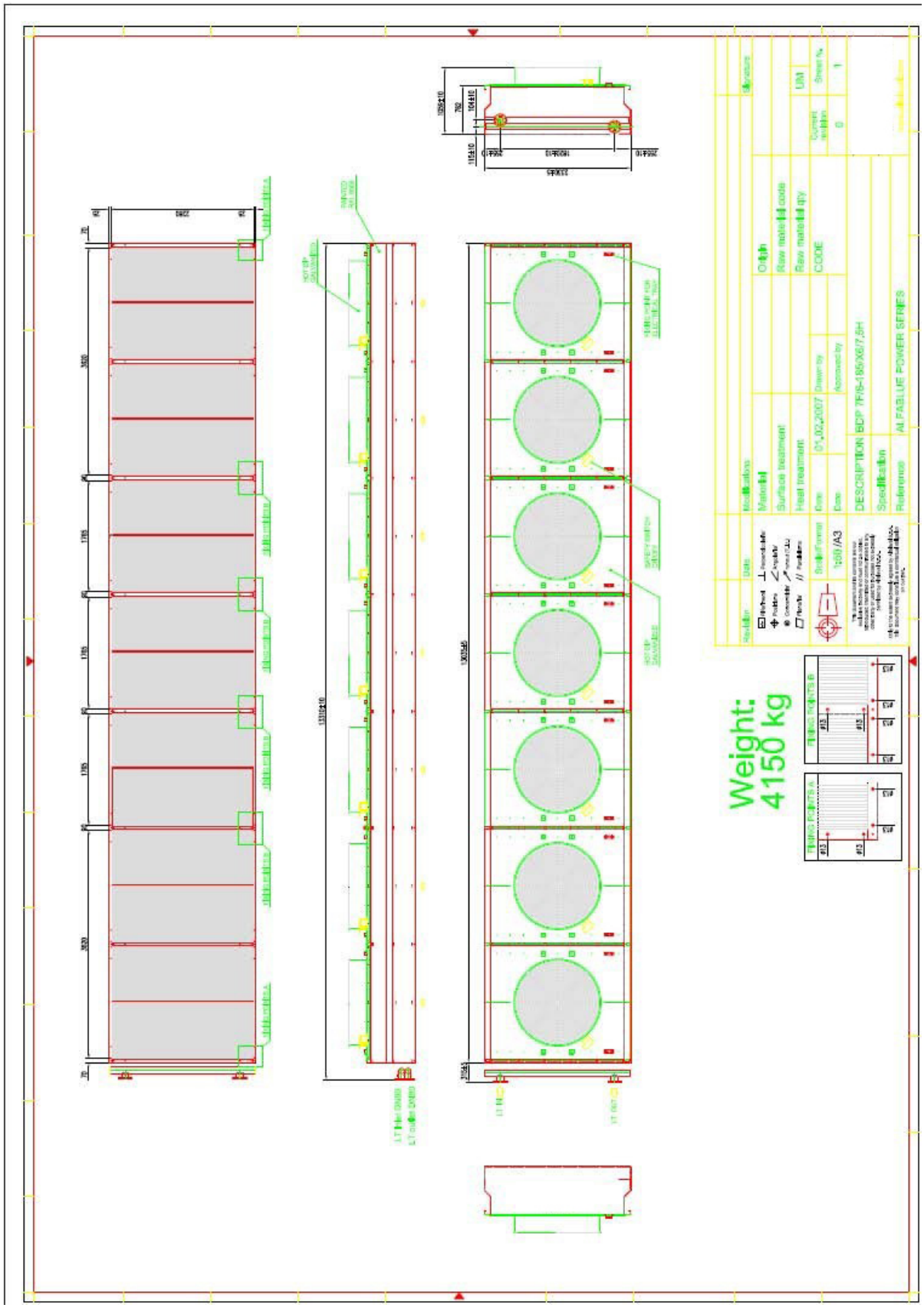

Transportation

The BDP can be transported:

- by truck
- in a 40' High Cube (or 45) Container (see Project Data-sheet)

One or two units can be shipped in each truck/container.

On request the shipment could be into a seaworthy packing.

Reception

The equipment is shipped with the following packaging:

- on wooden pallets or wooden supports (truck transport)
- on metal skid (truck transport and/or container transport)

The condition of the unit should be checked at the moment of reception, in every its part (fans, casing, coil block, manifolds, bolts, etc.): the equipment left the factory in perfect condition; eventual damages should be claimed immediately to the transportation company in writing in the Document of Delivery before being signed.

Alfa LU-VE or its Agents should be informed as soon as possible about the significance of the damage.

The Client should complete a written report including photo-graphs concerning each relevant damage.

ATTENTION

Check by a dynamometric spanner that the bolts on the air cooler, the support structure (where present) and the fan motor groups are tighter.

Storage

In warm environment

If the equipment has to be stored before its installation (one or more months) it is necessary to take the following precautions:

1) Store the BDP indoors, in a room with adequate conditions, temperature (**> 10 º C**) and humidity (**50 to 70 %**) and without corrosive liquids or vapors.
2) If the equipment is stored outdoors, it is advisable to **operate the fan(s), at least once per week, during 4 to 6 hours each time**, in order to prevent damage to the electrical motors (this is possible only if the radiators are in **Horizontal** position). If not possible, cover the fan cowl by a plastic bag to avoid the rain falls on the fan-motor when not in rotation.
3) Outside storage in **Vertical** position cannot be longer than 1month; in high humidity condition or rainy places a radiator cover protection is necessary to maintain in dry conditions.
4) Electric motors have the bottom holes open to drain the condensing water; these work only if the electric motors are in vertical position. If the radiators remain in Vertical position long time, the humidity could not drain out from the draining hole of the motor damaging seriously the motor.

Mounting

Layout

The following aspects should be considered before mounting:

a) Check the structure supporting design considering
   a. Radiator weight (dry + water)
   b. Air load due to fans: 400 N for each fan
   c. Wind load and Snow load
   d. Earthquake
   e. Ground quality
   f. Safety factor

b) Support height should be higher in dirty areas

c) Avoid the installation in closed locations and, in case, be sure to permit the free In/Our air passage without any obstacles creating additional pressure (this effects the Rad. performance);

d) Avoid as much as possible the obstacles (piping, steel structure, etc.) in the air flow

e) Areas submitted to noise limitations require customized lay outs / installations / protections

f) Distances suggested by Alfa LU-VE

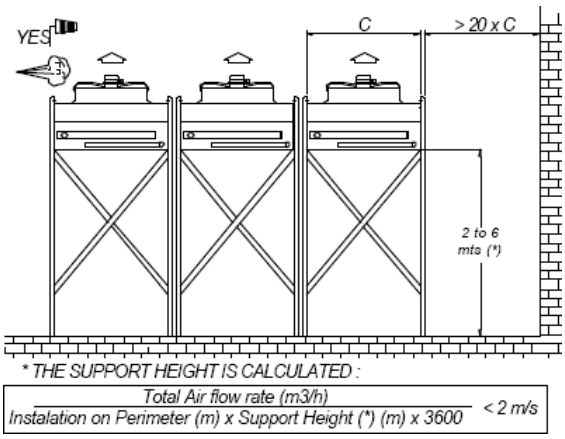

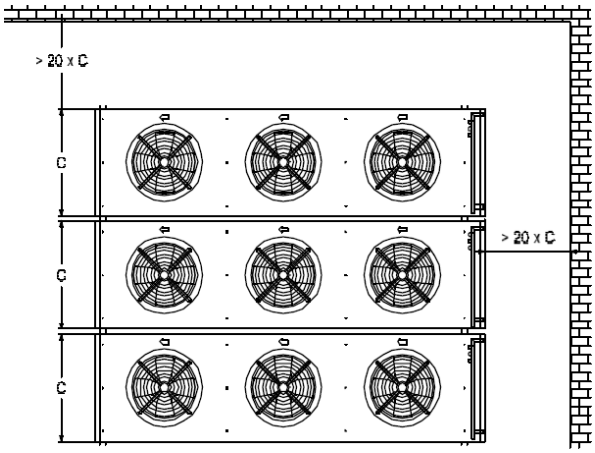

NOTE: air speed under the installation can be < 3,5m/s in Std plant; < 2m/s in low fan speed (<600RPM)

Equipment installation

Tools and accessories for lifting

NOT INCLUDED IN THE SCOPE OF SUPPLY

- Open end or combination wrenches kit, (sizes from 10 to 20 mm).
- Steel slings or chain with load capacity according to the BDP weight and safety factor (see project datasheet).
- Lifting crane with load capacity according to the BDP weight and safety factor (see project datasheet).
- N.8 Safety sling hooks with load capacity according to the BDP weight and safety factor (see project datasheet).
- Forklift with load capacity according to the BDP weight and safety factor (see project data sheet) with this suggested specification:
  - Fork dimension: 2000 x 200 mm
  - Distance between the forks: > 2000 mm
  - Capacity: according to the BDP weight (see project datasheet) and safety factor
- Lifting bar dimension below indicated:

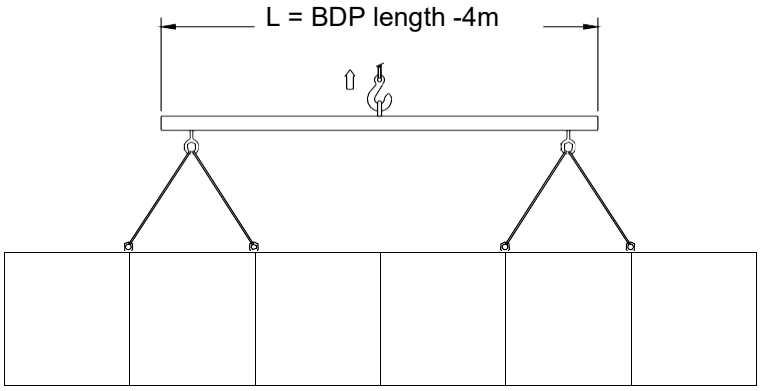

SLING ROPE: 2.5 mt MIN.

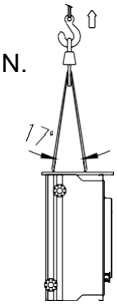

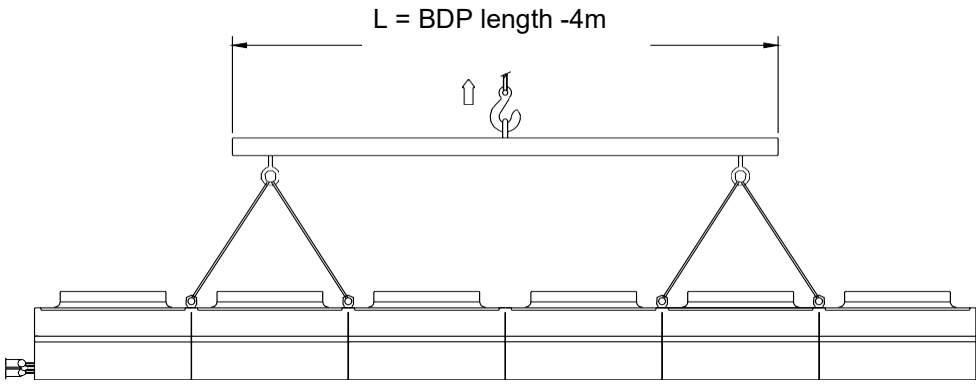

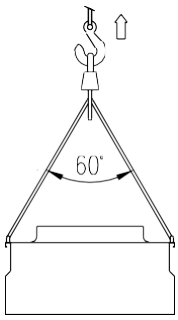

ATTENTION

See the project datasheet for the unit weight

Move and lift carefully to not damage the Radiator

Case a): two units together in a 40’ HC or 45’ HC container

Step a1 – RECEPTION OF THE UNITS, PREPARATION

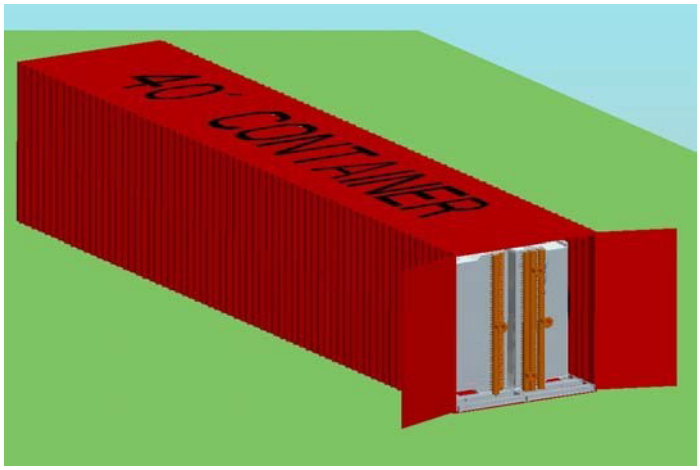

- Open the Container with 2 BDP inside and double check; damages should be claimed immediately to the transportation company in writing in the Document of Delivery before being signed.
- Place the container on a horizontal plan surface (better if in concrete)
- Check in the Delivery documents gross weight and dimensions of the container
- Remove every step or obstacles to permit the BDP skid sliding outside the container

Step a2 – DOWNLOADING

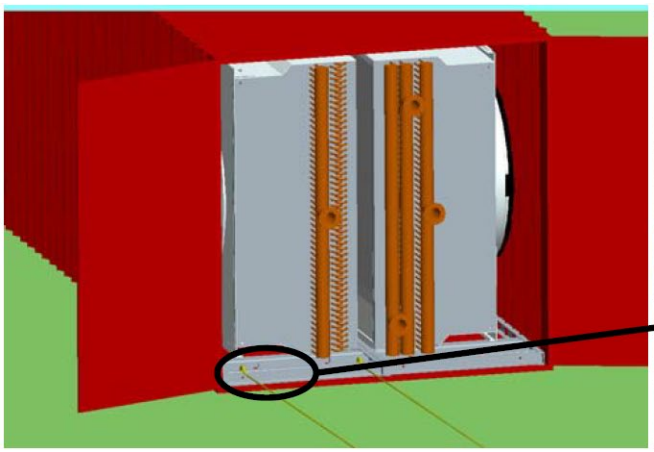

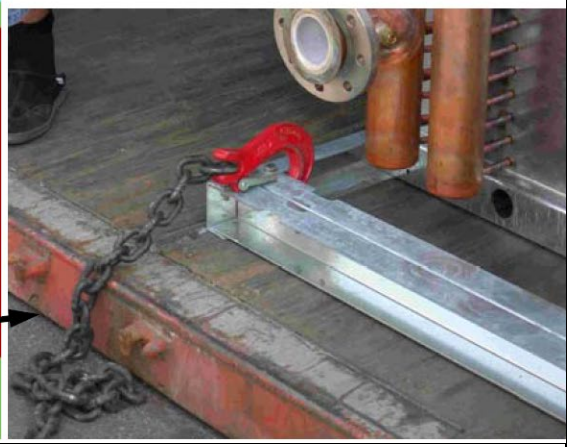

- Fix 2 hooks in the first BDP metal skid (see detail), as shown
- Remove one BDP each time carefully, without hurting the second Radiator

Step a3 – DOWNLOADING

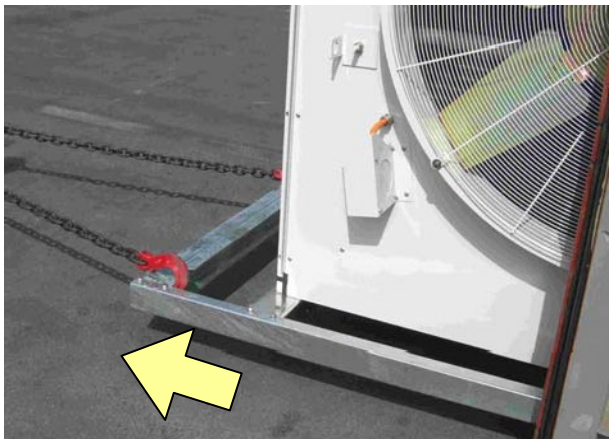

- Pull the skid slowly outside the container for about 2 meters
- Remove the 2 hooks

Step a4 – DOWNLOADING

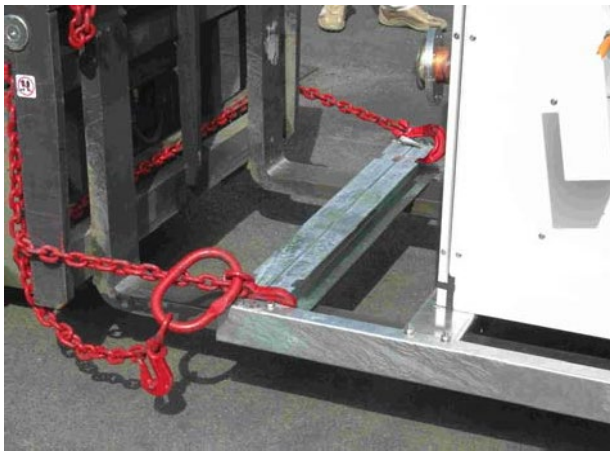

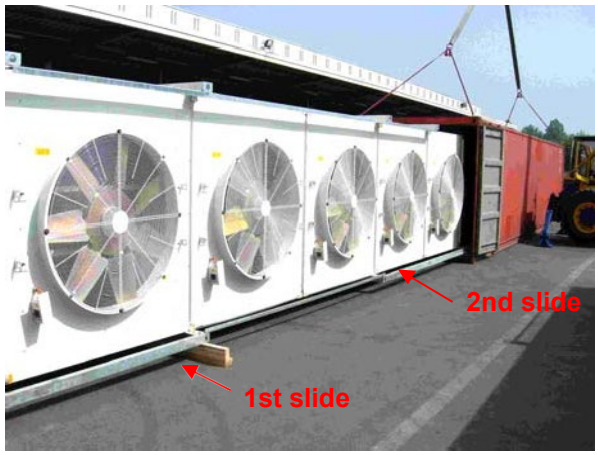

- Fix the chain (not included in the scope of supply) as in the picture
- With a forklift or using an equivalent tool, support the BDP weight and pull the skid slowly outside the container until the 2nd metal slide
- Let the BDP laid with the 2nd slide on the container's floor.
- Then when the BDP is stopped, put a wooden beam under the 1st slide in order to support the BDP

Step a5 – DOWNLOADING

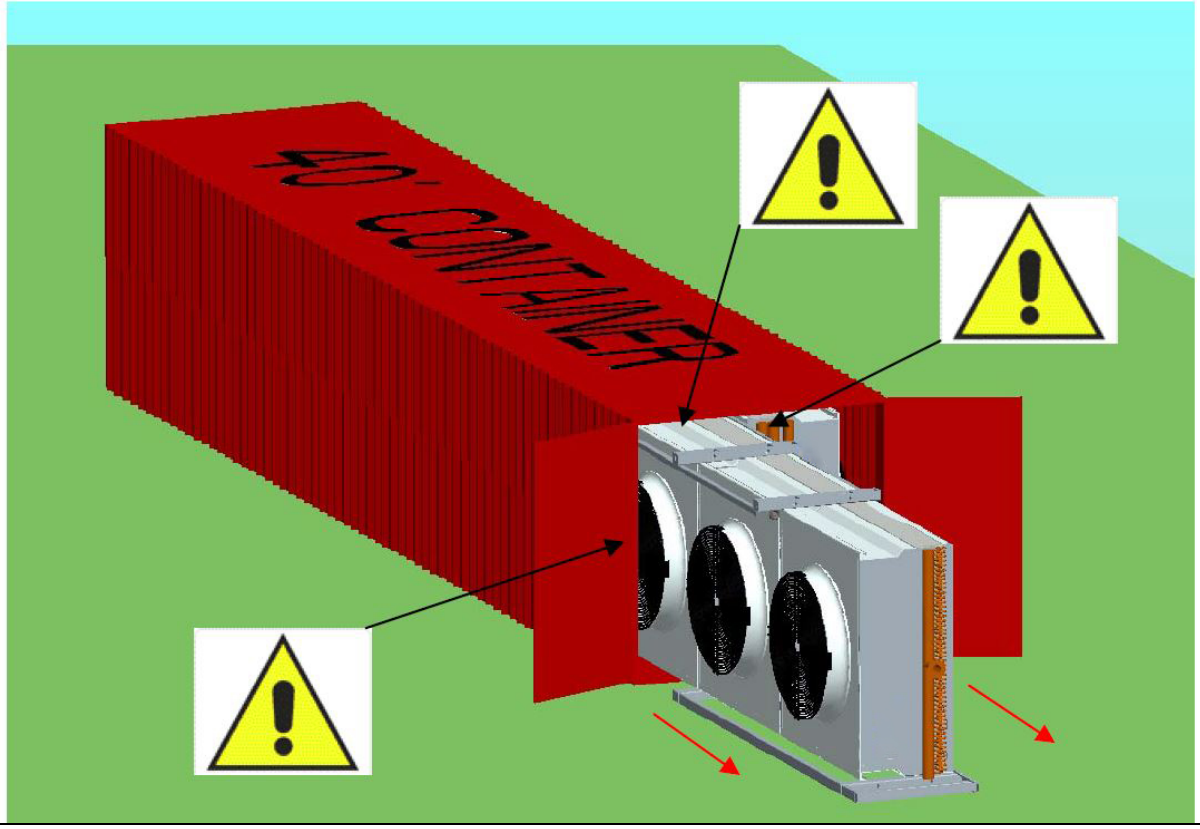

- In the pulling out, pay attention to not damage the equipment in the three sides: the container wall, the ceiling and the second unit metal skid

Step a6 – DOWNLOADING

- Now the BDP can be easily moved by the forklift or a crane
- Place the BDP in a large space to permit the unit rotation in horizontal position

Step a7 – HANDLING

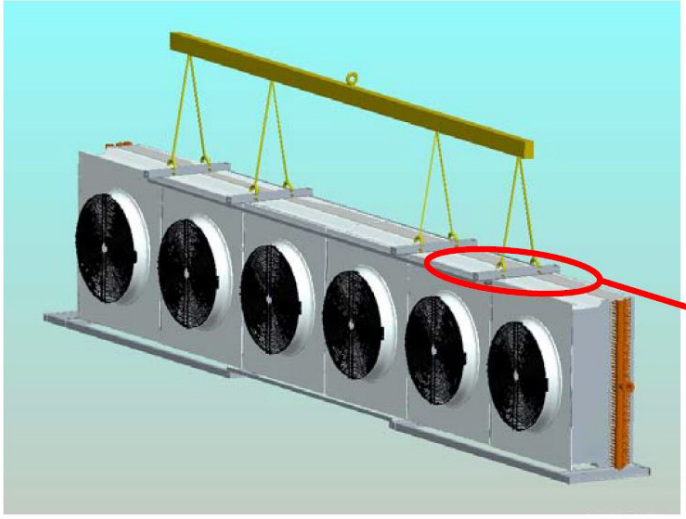

- Lift the unit in vertical position by the lifting bar
- Use all the 8 lifting points at the same time, by the hooks (see page 10)
- Pay attention to:
  - use a long bar (take care about the weight of the equipment and the lifting bar's capacity -use a > 1.5 safety factor)
  - distribute the weight in every chain
  - use every available lifting point at the same time
  - lifting eyebolts must work correctly
  - move carefully

ATTENTION

See the project datasheet / drawing for the unit weight

Step a8 – HANDLING

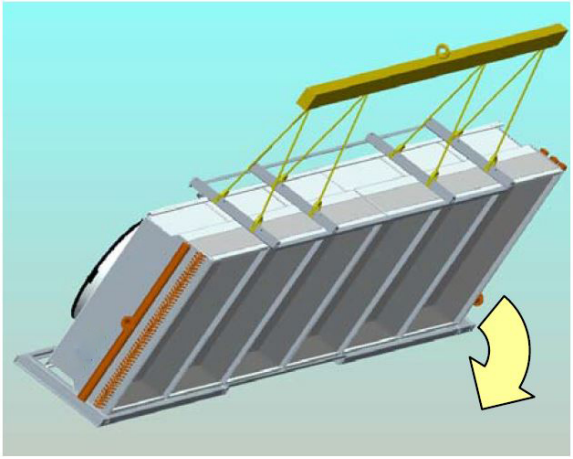

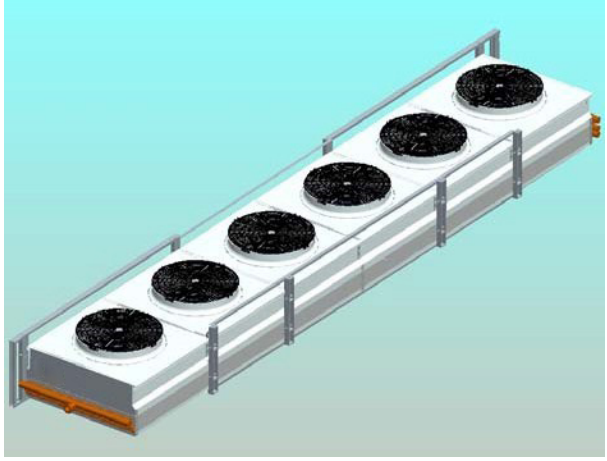

- Rotate carefully the equipment in horizontal position, avoiding any damage to the coil and the manifolds, and leave the bottom skid frame in contact with the floor

Step a9 - LIFTING

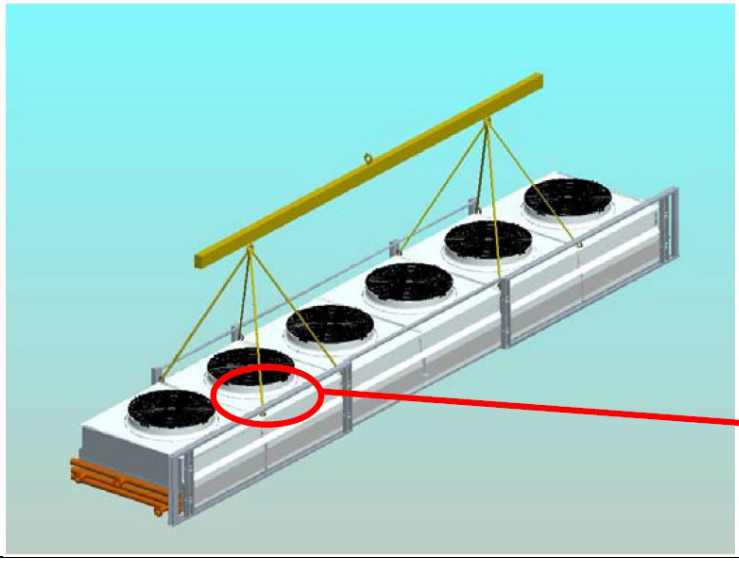

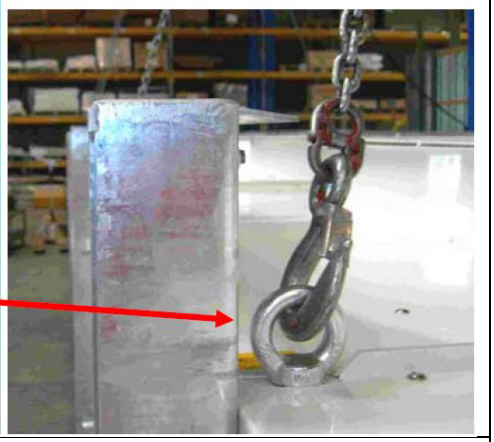

When the equipment is in horizontal position, fix the 8 eyebolts (or more if available) to the lifting bar by hooks, as indicated in the picture

Step a10 - LIFTING

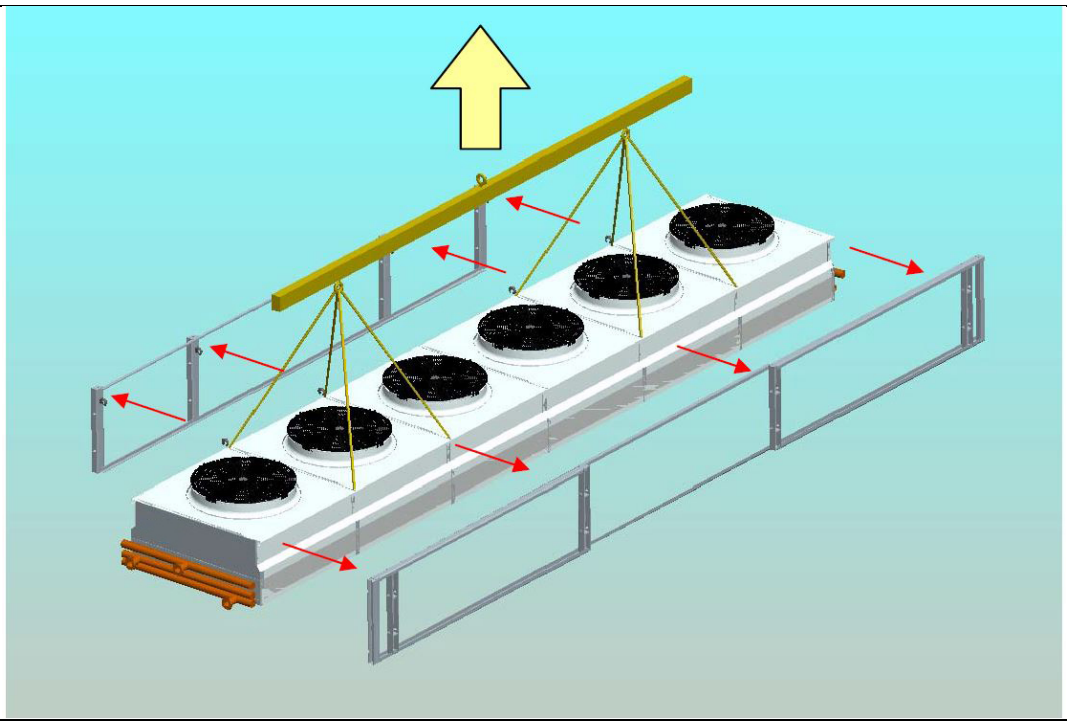

Lift the unit about 50 cm and remove the metal skid, unscrewing the fixing bolts

Now the BDP cannot be placed on the ground anymore

Step a11 - LIFTING

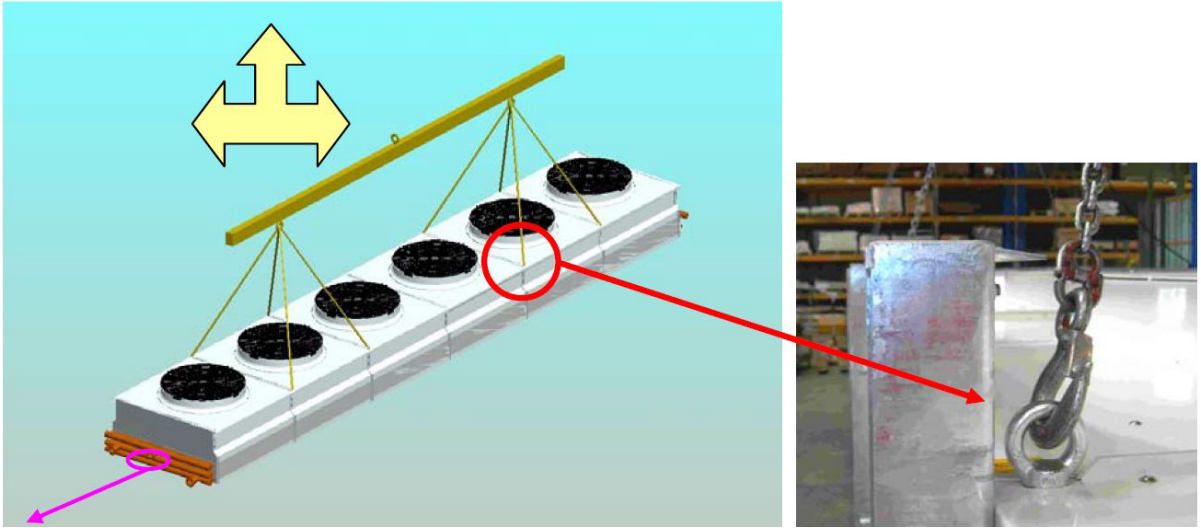

- The BDP is ready to be installed on the existing support structure
- Eventually fix a rope (on the frame, not to the manifold) and use it to guide manually the unit during the lifting and the installation on the structure

Note: use the rope only as a guide

Step a12 – MOUNTING

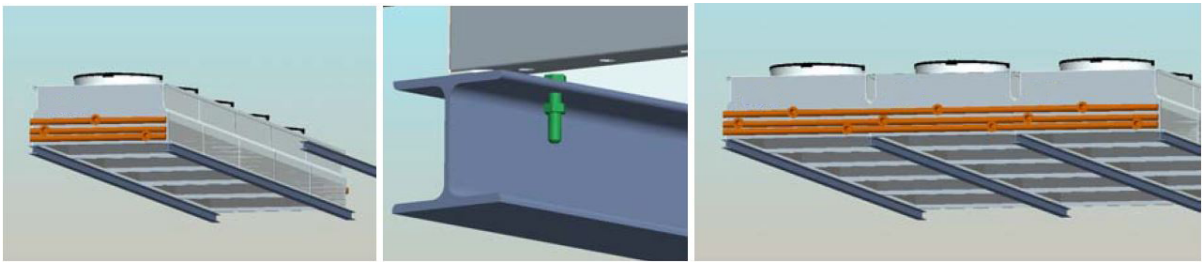

- Place the first BDP on the support structure (the picture shows an example)
- Fix it with bolts (not included in the scope of supply) - pay attention to not damage the coil

Case b): one unit in seaworthy packing

Step b1
Open the wood box Open the protecting bag Follow steps since a7

Important: 60º should be the minimum lifting angle between the slings and the equipment.

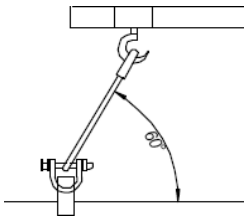

Case c): one/two units in a truck

In this case the metal skid is suitable to load the BDP in vertical position on the truck.

Not Pull or Push the radiator; the metal skid designed for truck transport **cannot** work as a slide.

Unload from the truck and follow previous steps since a7.

Piping Connections

The standard equipment is delivered with the following connections: PN 10 or PN 16 DIN Flanged

1. **The pipe's size should be in accordance with the IN and OUT coil connection's diameter.**
2. **Regulating valves should be installed at the radiator input and output. These should be mounted as close as possible to the equipment, to carry out the normal maintenance without draining the hydraulic installation.**
3. **To verify the operation, thermometers can be installed at 1m from the input and output flanged connections.**
4. **All the threads should be covered with TEFLON to assure the air tightness.**
5. **If present, the water hammer effect has to be removed**

The water hammer is a pick of pressure of short duration that can appear during the starting or the shutdown, making the liquids to move through a pipe like a wave at high speed. This effect can produce considerable damages to the equipment.

Step to follow

1. Customer has to design and prepare the piping.
2. Clean the pipes with water/detergents, in order to avoid dirt and welding residuals, once the piping has been installed, and before connecting to the equipment.
3. Check the alignment of the piping with the input and output connections.
4. **Any (horizontal, vertical or axial) load is permitted to the radiator coil block connections**
5. **All tubes must be well supported and fixed**
6. Vibration dampers and thermal expansion joints **must be** used (not scope of AL supply)

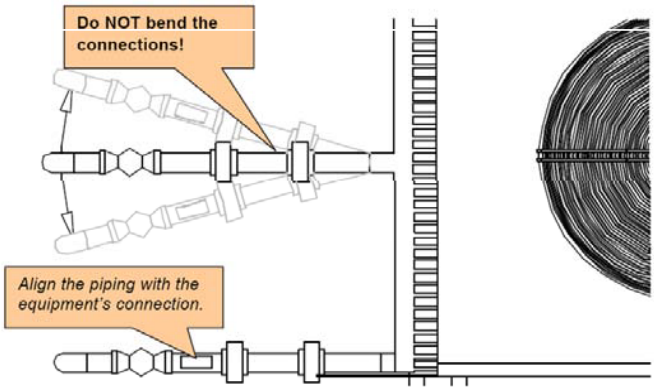

Suggested installation layout

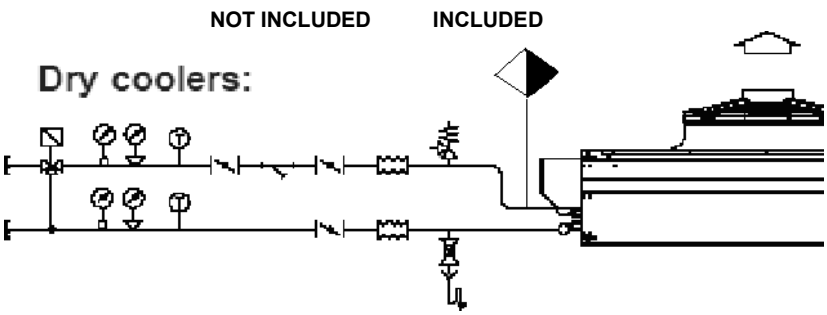

KEY	
	Piping temperature probe
	Ball valve
	Conveyed drain
	Automatic vent valve
	Antivibration joint
	Butterfly valve
	Mechanical filter
	Piping temp. meter
	Piping gauge
	3-way valve with modulating elec. or magnetic servo contro

Connection's type

The picture shows some possible connections, check in the drawing the right one

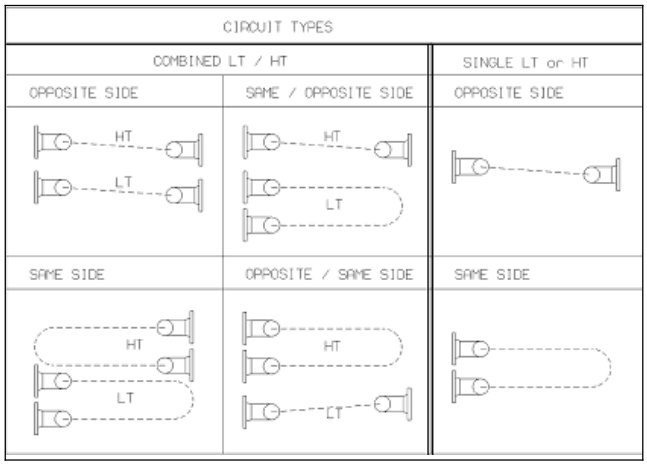

Electrical Installation

Read carefully the motor electrical scheme inside the terminal box

Power supply

Three phase: 3 x 400 +/- 10 Volts at 50 Hz

3 x 460 +/- 10 Volts at 60 Hz (on request)

or according to the electrical diagram (in case of non-standard delivery)

If the unit is designed to work with a frequency converter, see the project datasheet to know the maximum permitted frequency.

Starting

The starting equipment should be provided electric overload or power failure protection, with the proper capacity for starting and full load currents.

Ground connection is required by law.

The ground connection should be made from the equipment structure to the grounded electrode.

General security rules

In case of general power failure, the power supply to the electrical box has to be switched off from the general switch, before attempting any inspection. If the service to be provided involves only one part of the unit (e.g. one fan motor) it is recommended to mechanically block the switch in the O position, to avoid an accidental starting by unauthorised persons.

Starting checks

Rotation direction:

Check the rotation direction according with the nameplate indication by shortly powering the fan motor. To change the rotating direction, interchange any 2 phases out of the 3 phases of the power supply.

The maximum rotation speed has to be double checked in the project datasheet

Power consumption:

The current should be measured after a reasonable period of time to ensure that it does not exceed the nameplate current. Avoid frequent stop-and-start of the motor as this will lead to overheating. Direct on-line starts should be limited to **4/hour (more than 15 minutes intervals each other)**. Slight differences between actual and rated current and tension values are normal, depending upon the type of installation, the temperature and the altitude above sea level.

Check the Maximum Voltage / Ampere / Frequency in the project datasheet.

Functional Outline

ATTENTION

To carry out safe maintenance operations, an ON / OFF Switch should be installed close to the equipment.

SWITCH ON / OFF

(Standard delivery)

Protection class: IP 65

Grounding

Attention: The ground connection is required by law. Ground resistance should be lower than 3 ohms

Electrical motors

The fan motors have the following specifications:

Type: Induction squirrel cage

Protection type: IP 55 (standard delivery)

Insulation type: F class (standard delivery) or H Class if necessary or if required

Ball bearings characteristics as per maximum design temperature (see the project datasheet)

Connection: 3 Phase – 400 V + - 10% 50 Hz (standard delivery)

See electrical motors specifications in the Motor Manual

For the electrical cable tray installation, avoid drilling the metal sheet, in case of painted casing. As long as possible, use the existing holes and the available fixing points.

Railings Installation

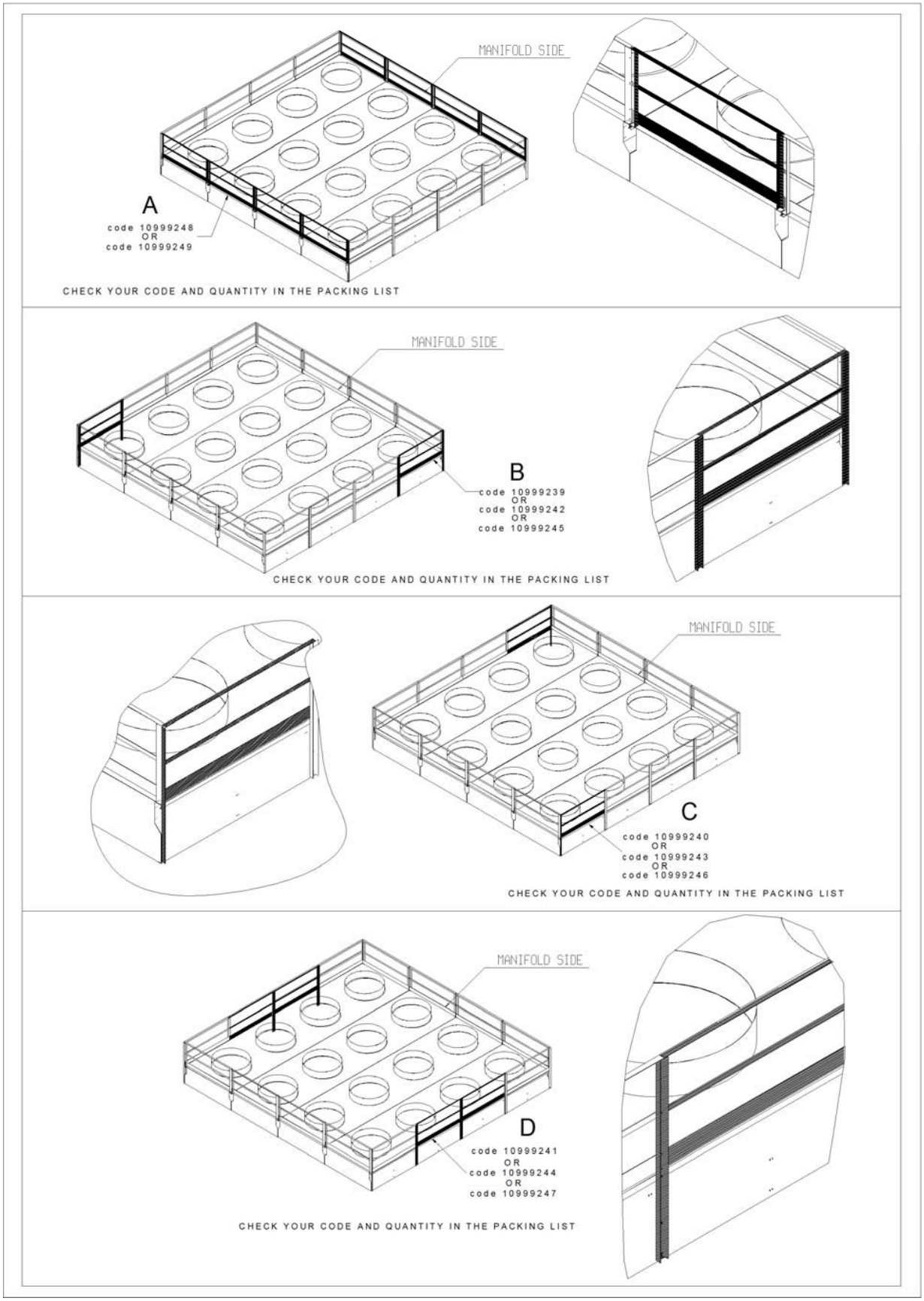

BDP 6__/8-185/__/__

Model size (8-159 / 8-185 / 8-222)
0=40' Container; 8=40' HC Container

Number of modules (fans)

AlfaBlue Drycooler Power (BDP / BDP6)

NB: There are four elements which complete the railings, these are indicated using letters A,B,C, D in all the picture of this section.

Code identification

If your Radiator is a “0” model size (see description above), code A is 10999249 else if your radiator is an “8” model size code A is 10999248.

If after “0” or “8” there is:

- “185”: the codes “B”, “C”, “D” are 10999242, 10999243 and 10999244 respectively.
- “222”: the codes “B”, “C”, “D” are 10999239, 10999240 and 10999241 respectively.
- “159”: the codes “B”, “C”, “D” are 10999245, 10999246 and 10999247 respectively.

Quantity determination for single platform

The quantities for codes are the following:

- “A” ➔ 2 x number of radiators
- “B” ➔ 2
- “C” ➔ 2
- “D” ➔ (number of modules – 2) x 2

i.e. model BDP 6_ /8-185/__/__:

1 radiator installed: A = 2
B = 2
C = 2
D = 2

Platform made by 4 radiators installed side by side: A = 8
B = 2
C = 2
D = 8

List of components

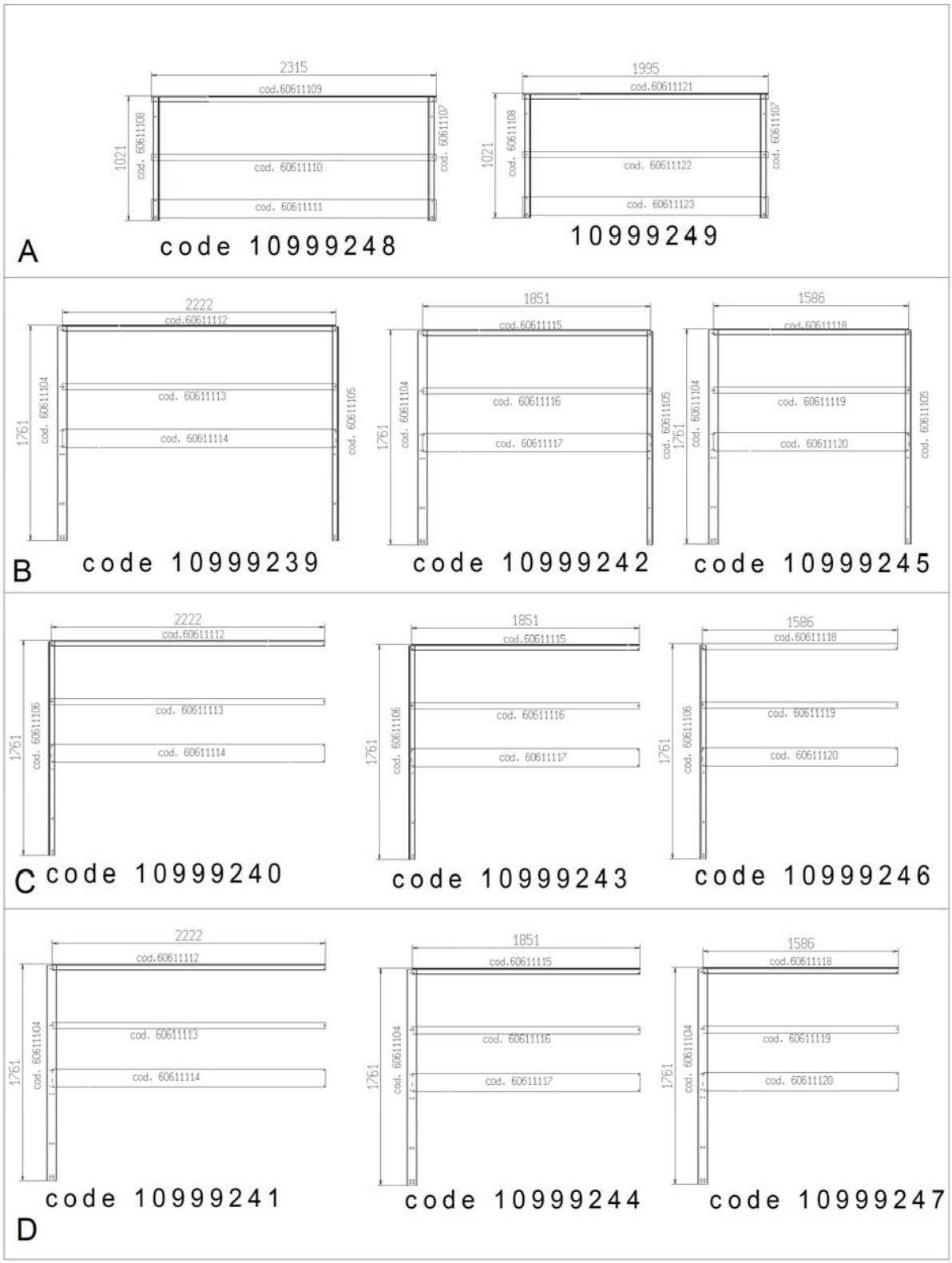

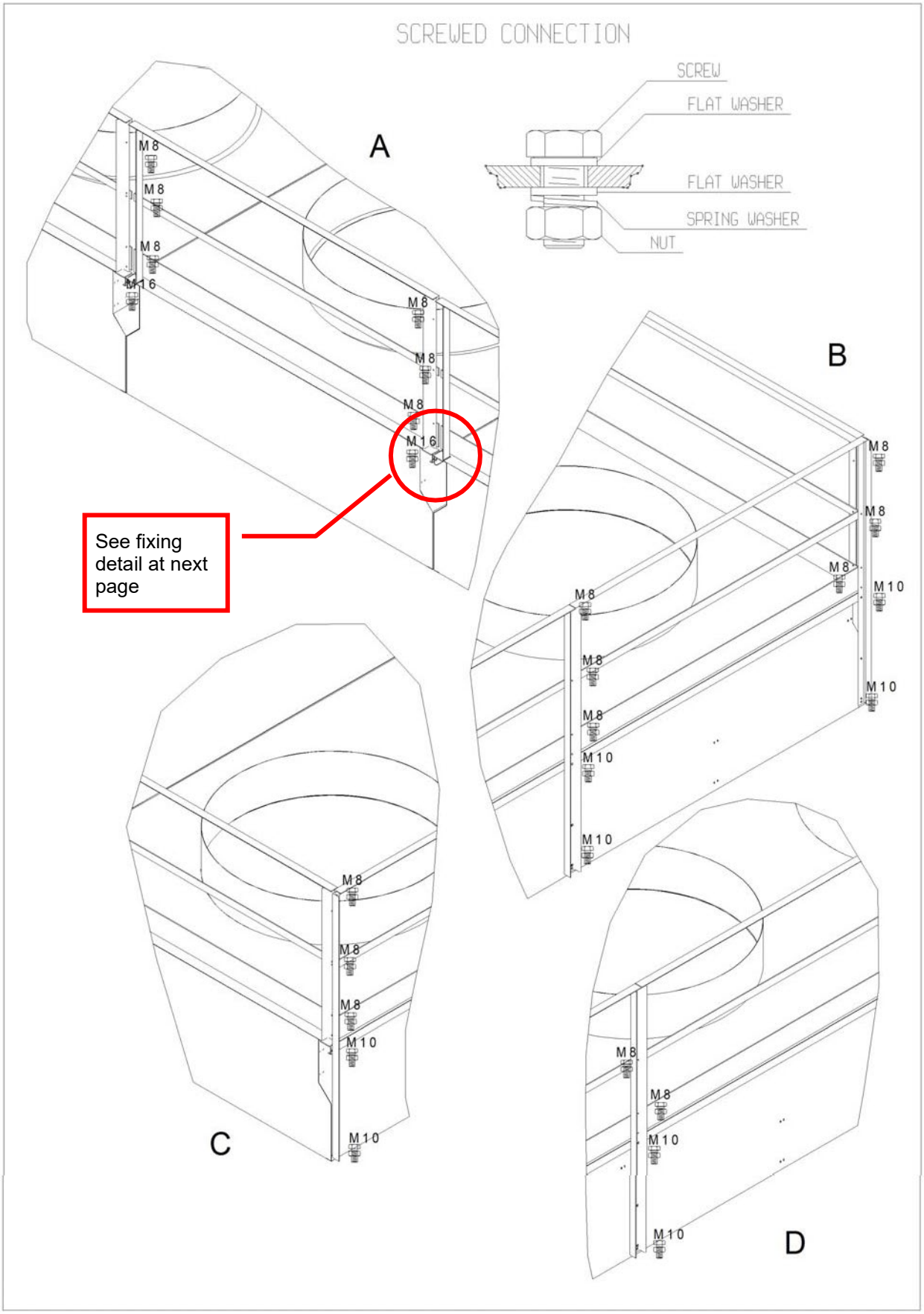

Fixing Detail

Please, fix the assembly called “A” as shown in the following picture:

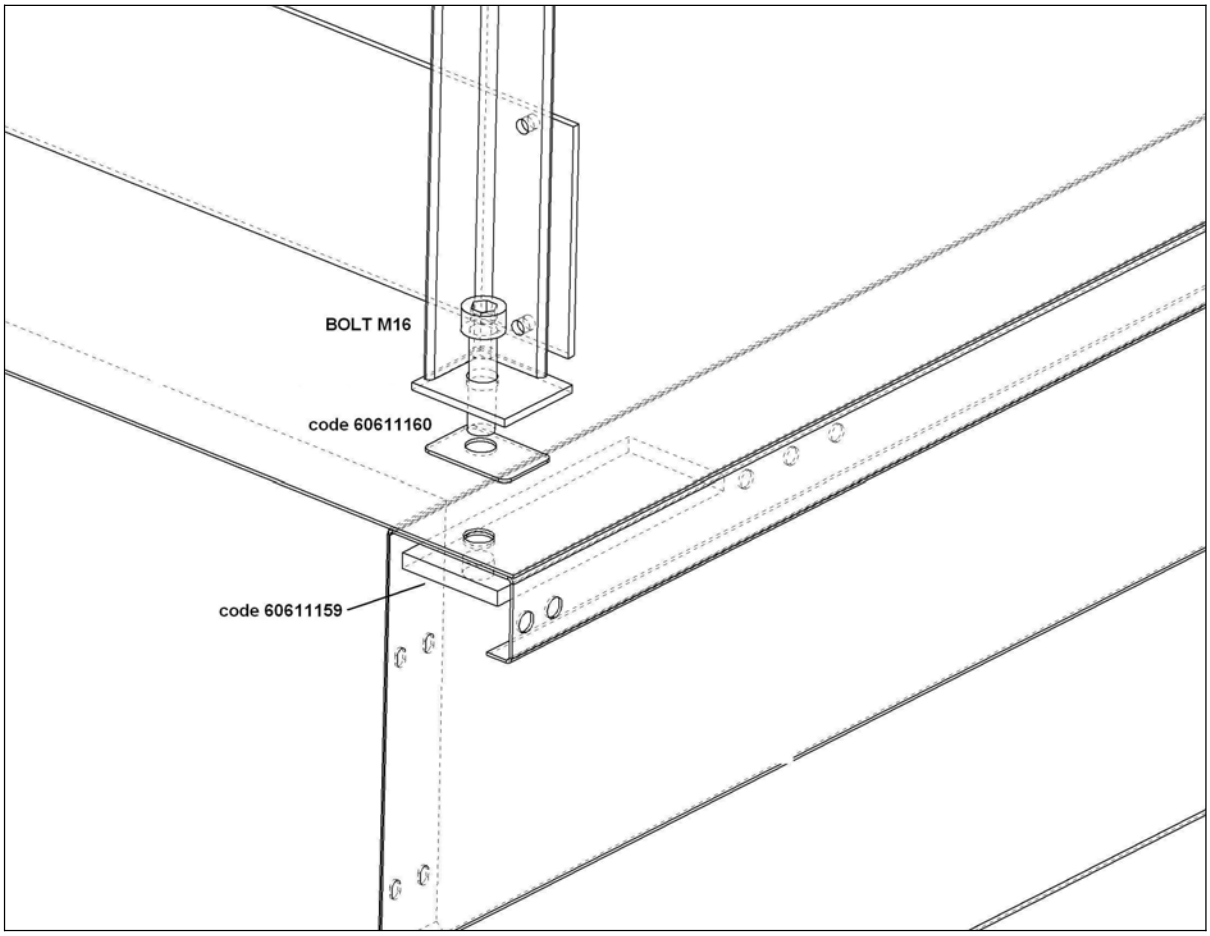

Operation

ATTENTION

The use of the equipment in conditions different from those specified in this manual may generate serious damages

Starting the Cooler

1. Check that all the equipment-fastening screws are perfectly tighter, before starting.
2. Check that the equipment inlet valve is closed and the outlet valve is fully open.
3. First, open the vent valve and then start the liquid feeding pump.
4. Open the equipment inlet valve slowly, until reaching the designed flow.
5. When the whole air in the equipment was purged, close the vent valve. Make sure that the circuit, including the external piping, is free of air.
6. Check the direction of rotation with the casing nameplate.
7. Verify that there are no leaks in the equipment or in the circuit.

ATTENTION

Advise immediately Alfa LU-VE in case of abnormal noise or too high vibrations at the first start-up

Operating the equipment

1. Check the liquid inlet and outlet temperatures
2. Check the fluid flow rate.
3. Check if the air circulating is correct (upwards), correct the problem if any recycling exhaust hot/warm air is moving downwards.
4. Check the fan rotation direction.
5. Check if the coil is clean.
6. Check that the current load indicated on a current clamp tester is equal or slightly lower than the rated, when the fan(s) are running at rated rpm.
7. The fan speed is indicated in the datasheet. Check the correspondence to fan datasheet and the order.

ATTENTION

Never use the fans at higher speeds than the nominal fan speed

The fans are suitable for continuous use in clean air.

Number of starts

The fans are suitable for continuous operation. The number of starts should be limited to:

- 4 direct on-line start per hour (15 minutes continuous every each start)
- 2 starts in quick succession followed by 30 minutes cooling, which may be achieved by continuous running or switching off.

Reversal

A reversal running will generate (in most of the installations) an air flow equal to the 50% of the nominal fan air flow.

ATTENTION

Before the reversal is carried out, the fan must be completely stopped. The proper rundown time can be measured by simple observation. It is usually between 15 and 90 seconds.

Operating under frequency converter

The use of inverter installation put higher demands on the cabling and grounding of the drive system, the frequency converter must be properly sized according to the motor power. Refer to the frequency converter and motor manual for electrical connections, wirings and safety requirements.

ATTENTION

Do not run the motor with a frequency higher than the motor name-plate frequency or the frequency indicated in the project datasheet

A proper starting ramp should be chosen in order to avoid motor overheating and vibrations. If the fan must be run at speeds different from the nominal motor speed, it is important to verify that the selected speeds do not generate vibrations or resonance in the fan or in other parts of the equipment/installation.

For drives with frequency converters as with all other drives, the operator must ensure that he complies with current regulations. These vary, depending on the drive and the environment. Frequency converters place a much greater stress on the motor and the environment than when the motor is connected directly to the mains.

Alfa LU-VE prescribes sinusoidal filters effective on all poles for the operation of external rotary motors on frequency converters to reduce the Voltage peak and ΔV/Δt at motor terminals as per **IEC 60034-17** Standards (It is advisable to ask the inverter manufacturer)

These sinusoidal filters supply sinusoidal output voltages phase against phase and phase against protective conductor, which approximate to the details of DIN V ENV 61000, part 2-2.

Sinusoidal filters are installed between the converter and the motor directly on the output terminals of the converter (connection as in fig.1).

Benefits with the sinusoidal filters

- Practically no increased stress on motor compared with mains operation. Therefore, hardly any effect on the environment.
- Generally no need for shielded motor leads. It is essential to follow the guidelines of the manufacturer of the converter and sinusoidal filter in this respect.
- Metallic motor terminal boxes are not necessary.

- A second earth lead connection is not required on the motor as no significant leakage currents flow to the motor.
- No special conditions apply to the air and leakage paths in the motor terminal boxes.
- The life of the insulation system and bearing are the same as with mains operation.

Depending on the guidelines of the filter manufacturer the leads must be protected according to the effectiveness of the filter.

ATTENTION

If it's not necessary from a performance point of view, do not run the motor at the nominal maximum frequency. A lower frequency means longer bearing life and lower electrical consumption.

Variations of the operating conditions

The operating conditions (RPM, ambient temperature, quote above sea level) are given on the data-sheet at the design conditions. If the equipment runs under different conditions, the following rules apply.

Temperature

The ambient temperature modifies the thermal performance of the liquid cooler. If the ambient temperature increases, the thermal performance decreases.

Contact Alfa LU-VE to check the cooler thermal performance at ambient temperature different from the design condition.

The temperature modifies also the air density. Here following some air density values at different temperatures are shown:

T	-20	0	15	50	100	°C
ρ	1,39	1,29	1,09	0,9	0,94	Kg/m3

The fans performances change according to the following theoretical rules:

Volume	(Q):	Q1 = Q2 = cost
Pressure	(P):	P1 = P2 x (ρ1/ρ2)
Power	(W):	W1 = W2 x (ρ1/ρ2)

Quote above sea level

A variation of quote corresponds to a change in air density with the same effect of the previous paragraph. Contact Alfa LU-VE if the installation is at a quote a.s.l. different from the value in the data- sheet.

Speed (RPM)

The fan performances change with RPM according to the following rules:

Volume	(Q):	Q1 = Q2 x (RPM1/RPM2)
Pressure	(P):	P1 = P2 x $(RPM1/RPM2)^2$
Power	(W):	W1 = W2 x $(RPM1/RPM2)^3$

A changing in the fan performances means a changing in the thermal performance of the liquid cooler.

Blade Pitch Angle

If adjustable pitch blades impellers are installed and the blade pitch angle is changed, the fan performances and absorbed power change accordingly; ask to Alfa LU-VE the permission before changing the angle.

ATTENTION!
A change in blade pitch angle may generate an absorbed power higher than the motor nominal power. This is a dangerous situation. Check carefully the operating condition before changing the blade pitch angle and measure the current after the change.

ATTENTION!
The change of the blade pitch angle must be made according to the fan manual.

Shutdown

1. Close the inlet valve to the equipment
2. Close the outlet valve of the equipment
3. Switch OFF the liquid circulating pump
4. Switch OFF the fan(s)

If the procedure of shutdown has to be done in winter, add some antifreeze into the piping and the radiators. Before following point 1 and 2, put the pump in rotation to distribute and mix the antifreeze fluid in all the pipes

It is important to follow the starting procedure every time you want to start the equipment.

Draining the coil

When the coil unit needs to be emptied for maintenance or when the system is not in use in winter-time, proceed as described below:

- Turn off the system and open the vent valve on the highest point of the circuit and the vent- plug located on the top of the manifold
- Open the circuit drainage plug located at the bottom of the header or the drain valve if installed and wait for the coil block is empty.
- Make sure the coil-block is totally drained (use pressurized air).
- When the circuit is empty and to avoid the ice formation, fill the coil with antifreeze mixture, in accordance with the proportions shown in the table at page 41. To restart the operation, repeat the procedure, but in opposite order.

Maintenance

Ordinary maintenance

The air coolers require regular maintenance in order to assure efficiency and prevent damage to objects and persons. The frequency of ordinary maintenance depends on the actual operating conditions. In optimal working conditions and continuous operation, it is recommended to carry out servicing after approximately 100 hours of work and later at periodical intervals of 1500 hours.

Only some applications require the use of completely clean water. Generally the water comes from closed systems (mains) or in some cases from open systems such as wells, beds or rivers. In time this water can lead to precipitation or the deposit of organic and inorganic substances on the internal surfaces of the pipes (fouling).

These fouling deposits act on both the thermal resistances to reduce the thermal exchange and on the hydraulic resistances, increasing the load losses.

During installation it is always recommended to fit a filter upstream from the exchanger; it is the responsibility of the user to establish the quality of the water used and to ensure that it is compatible with the materials used in the exchanger.

Some parameters that must be checked are:

- The hardness of the water, to assess the need for softening.
- pH analysis (a value between 7.5 – 9 is recommended).
- A sediment analysis to determine the need for filters in order to avoid the formation and accumulation of residues and pipe erosion.

In the following paragraphs some ordinary maintenance operations are explained separately. The described operations are not exhaustive but are given simply as a ***guide*** to the correct approach to maintenance.

The indicated servicing frequency is considered a recommended minimum; it may be increased at the discretion of the maintenance technician depending on the installation characteristics.

Attention before attempting any maintenance operation, make sure that the power supply is properly disconnected.
The power supply should be turned off from the sectional board.
For further security, the operator can also turn the switch ON / OFF to the OFF position to avoid accidents

If the equipment should remain without operation for long periods (one or more months), it is advisable to operate the fan(s), at least once per week, during 4 to 6 hours each time.

Attention
In case the operator has to walk on the top of the air cooler, follow carefully the below restriction about the walking and the not walking areas on the unit.
Only maintenance or emergencies justify the walking on the top covers.

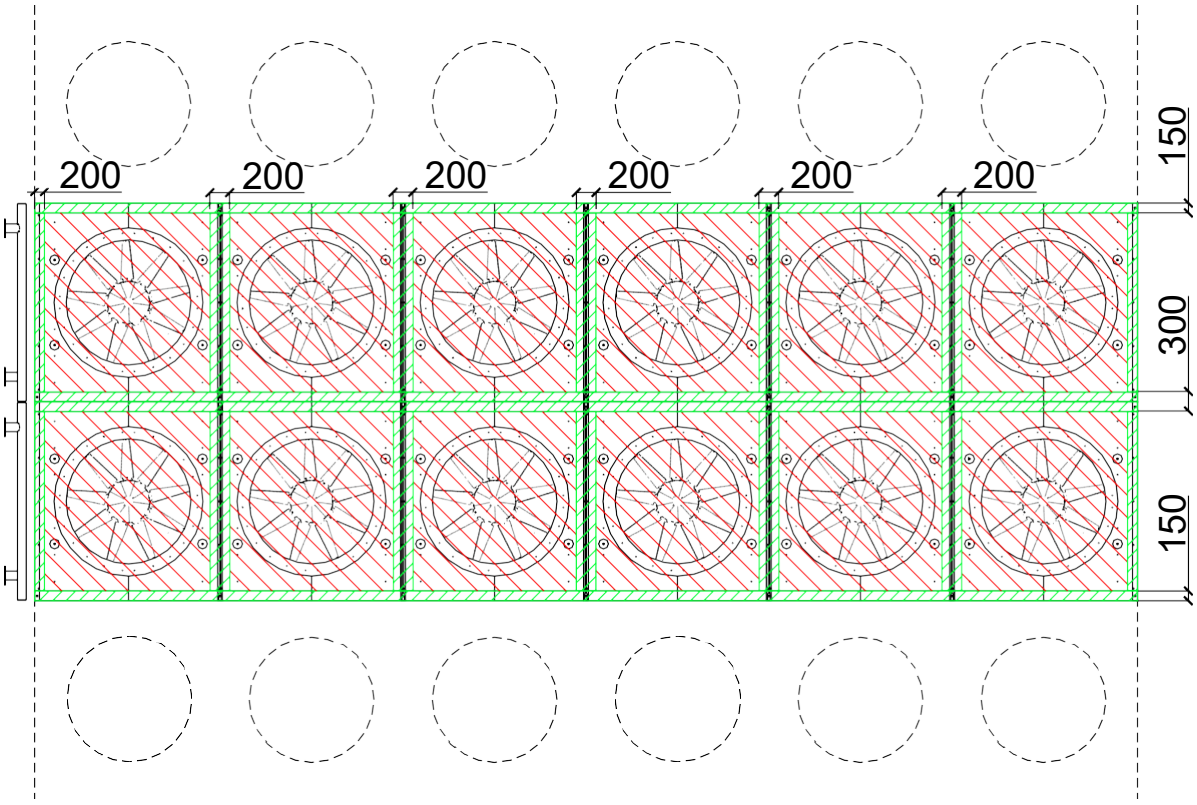

WALKING AREA

NOT WALKING AREA

Coil Cleaning

Description

The normal and continuous operation of the unit will increase the risk to get the coil dirty. Depending on the environmental working conditions (atmospheric pollution, presence of pollen, dust, working residues, external temperature, distance from the sea, etc.), the build-up of dirt can become serious and lead to the drastic reduction in the performance of the unit.

When the dirt is serious, it's possible a drastic performance reduction, the heat exchange coefficient decreases, and air pressure drop increases (consequently the fan consumption too).

Depending on the amount of dirt, the coil needs an appropriate cleaning plan.

Finned coils should be cleaned using **vacuum cleaner** (from air intake direction) or, if it is really dirty, **using a water jet** (outlet air direction (fan motor side) perpendicularly to the coil in order to avoid bending or damaging the fin profiles.

If the finned pack is a little "bended", it can be adjusted by using a special tool (the comb).

Attention
Incorrect use of high-pressure water can damage the coil

Tools required

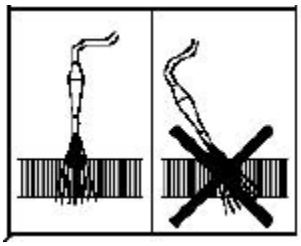

- Pressurised water for fins cleaning (Pmax < 2 bar);
- Water-soluble degreasing solution;
- Combs for the finned pack.

There are 3 types of comb:

- a single body in rigid, long-lasting nylon. Each comb has a different colour and is embossed with the fin pitch for easy identification.

- aluminium body and interchangeable Teflon heads depending on the fin pitch.

- "universal", made of a single aluminium body with a rubber handle, the steel wires automatically adapt to all fin pitches. The sliding ring is used to vary the wire spacing (*item that can be supplied by Alfa LU-VE - See it in the next picture*)

CIP (cleaning in place)

A deeper cleaning can be obtained by using of a solvent/degreaser.

It must be mixed with hot water and sprayed on the coil (with a normal hand spry system). After approx. 1 hour, the dirt will be dissolved and the coil can be clean with compressed water.

To ensure a better distribution of the degreaser, it can be necessary to remove the fan.

It has been demonstrated that the advantages of the CIP method are:

- Reduction of the air pressure drop; this means save electrical energy for the fans.
- Lengthening of fans life cycle.
- Increase of Performance.

Estimated time per unit

Combing: 10 minutes/module (*)

Cleaning: 1,30 hour/module (*)

(*) variable depending on the height of the coil off the ground

Recommended interval (Depending to the environment)

3 months	
6 months	X
1 year	X
2 years	
6 years	

Depending to the site conditions

Checking the air in the coil

Description

When the system is first filled, a certain amount of air inevitably remains trapped inside, collecting in the highest parts of the system. More air may form during normal use. It is therefore a good idea to include vent valves on the tops of columns, elbows and other high parts of the system.

The air cooler is often located in a “higher” position than the rest of the system, and therefore the coil air removal operation must be carried out not only during start-up but also at regular intervals.

The manifold manual vent valve, or the cap, can be unscrewed manually to let out the air, closing it when the water starts to come out.

Attention Be careful to the temperature of the water coming out once all the air has escaped.

It is recommended to clean the metal filters in the hydraulic pipes (at least every 6 months).

Tools required

None.

Estimated time per unit

5 minutes

Recommended interval

3 months

6 months

1 year X

2 years

6 years

Draining the coil

Description

When the coil needs to be emptied for maintenance or machine stop, proceed as described below:

- Turn off the system and open the vent valve on the highest point of the circuit.
- Open the drainage valve (if installed by the customer) and wait for the system to empty (use pressurized air to make it faster).
- It is recommended to fill the coil with antifreeze mixture, in accordance with the proportions shown in the table below, once it is empty, to avoid the formation of ice.

Air Temp. [°C]	Glycol % [Kg/Kg]
0	10
-5	20
-10	30
-15	35
-20	40
<-20	50

Tools required

None.

Estimated time per unit

Few minutes/module

Recommended interval

When required

Checking and tightening nuts and bolts

Description

Checking that the bolts on the air cooler, the support structure (where present) and the fan motor groups are tighter.

Tools required

Dynamometric spanners

Estimated time per unit

15 minutes (casing bolts/nuts) per unit

30 minutes (fans and electric motor supports) per module

Recommended interval

3 months	
6 months	
1 year	X
2 years	
6 years	

Bearings

Description

Alfa LU-VE liquid cooler are generally supplied with sealed for life bearing, with no need of lubrication.

The life varies depending on the actual operating and environment conditions.

Considering an average operating time of 8,500 hours/year, generally every 3/4 years (depending to the working conditions) the bearings should be replaced, using spares having the same characteristics of the original.

Before carrying out any operations make sure that the fan is not moving and cannot be casually or accidentally switched on (electrical power off). The removal and relative assembly are extraordinary maintenance operations, and must be carried out by qualified staff using the appropriate equipment.

See the electrical motors manual or contact the motor supplier for the electrical motor dis-mounting/mounting and the bearing replacing.

If electrical motor with greasers are installed, a periodical lubrication is necessary and the intervals depends on speed (rpm), ambient conditions, etc.

Insert the correct grease type and grease quantity, until the new clean grease goes out from the discharging holes.

See the electrical motors manual or contact the motor supplier for bearings periodical lubrication.

It is dangerous to run the electrical motors without ball bearings maintenance; this will cause high vibrations, noise, fan blade unbalancing, mechanical failures, etc.

Visual control of the vibrations

Description

The vibration levels could give noise or ball bearing damages. There are several vibration reasons:

- One or more unbalanced blades.
- Non-coplanarity of the blades.
- Drive shaft not aligned.
- Fixing nuts loose.
- Drive shaft bearings damaged.
- Ball bearings need to be replaced or new greased

Periodical check is recommended to ensure the correct operation of the fans:

Visual inspection with the fan at a standstill to check the structural integrity and the cleanliness of the blades (dirty blades can unbalance the impeller).

Visual inspection with the fan running to check that there are no abnormal vibrations (if present, they are easily noted).

Tools required

None

Estimated time per unit

10 minutes

Recommended interval

3 months	X
6 months	
1 year	
2 years	
6 years	

Checking the ground connections

Description

Checking the condition of the ground connection and the absence of PD between the unit casing and the earth circuit.

Tools required

Normal electrician's tool kit

Estimated time per unit

5 minutes

Recommended interval

3 months	
6 months	X
1 year	
2 years	
6 years	

Checking the condition of the electrical wires and tightening of the terminals

Description

Checking the tightness of the electrical terminals both inside the control panel (where present) or switches or terminal box, and in the electric motor box.

Tools required

Electrician's tool kit

Estimated time per unit

30 minutes

Recommended interval

3 months	
6 months	X
1 year	
2 years	
6 years	

Replace the cable glands and/or the electrical cables if damaged

Checking the fixed and mobile contacts on the remote control switches

With normal use, electric arcs, dirt and wear, and the remote control switch contacts become inefficient.

If the remote control switches:

- Make abnormal noise and/or vibrate;
- Overheat (possibly giving off smoke),
- Operate intermittently,

it is recommended to control the electrical contacts carefully; they may not commutate correctly because of corrosion or even “sticking” (due to overcurrents), dirt, wear or other mechanical problems.

In the event of clear deterioration, the switches should be replaced.

Description

The resistance of the switches’ closed contacts must be measured; in good condition (on the order of milliohms). If the value increases, the contacts should be cleaned using paper and contact cleaner spray.

Tools required

Electrician’s tool kit, contact cleaner spray

Estimated time per unit

5-10 minutes/switch

Recommended interval

3 months	
6 months	X
1 year	
2 years	
6 years	

Extraordinary maintenance

Replacing the electric motor

Cause

Mechanical or electrical damage to the motor.

Description

Spare parts electric motors can be used for replacement

The procedure for replacing the motor is here indicated:

- Remove the protective grid.
- Unscrew the fan impeller.
- Lift the impeller carefully (handle carefully the fan impeller when dismounted)
- Anchor the motor eyebolts with lifting straps to support the weight of the motor before loosening the nuts.
- Open the electrical connection box and disconnect the terminals.
- Unscrew the fixing nuts of the motor support rods.
- Lift and remove the motor-fan unit.
- Mount the new motor following the above steps in the reverse order.
- Fix the fan impeller, before installing the protection grid.
- Rotate manually the impeller to check it runs correctly without any contacts
- Make the electrical connections in the connection box.
- Switch on briefly to check the rotation direction.

Before carrying out any operations make sure that the fan is not moving and cannot be casually or accidentally switched on (electrical power off). The removal and relative assembly are extraordinary maintenance operations and must be carried out by qualified staff using the appropriate equipment.

Fan replacing

Description

Here the fan replacing procedure:

- Turn off the power
- Remove the protective grid.
- Unscrew the el. Motor shaft bolt (the one that fixes the fan impeller).
- Lift and remove the fan.
- Mount the new fan following the above steps in the reverse order.

Before carrying out any operations make sure that the fan is not moving and cannot be casually or accidentally switched on (electrical power off). The removal and relative assembly are extraordinary maintenance operations and must be carried out by qualified staff using the appropriate equipment.

Original spare parts are necessary. It could be dangerous installing wrong spare parts.

Coil repairing

Cause

Leaking coil

Description

Following any damage causing the coil to break, having emptied the circuit the repair must be carried out using braze-welding (for copper pipes), or TIG welding (for stainless steel pipes).

Welding repairs must be carried out using the special alloys (for further information please contact Alfa LU-VE).

SEAL TEST: fill the circuit with nitrogen up to 10 bar pressure. Any losses must be identified using a bubble leak finder. Any bubbles or foam indicate a localised leak.
If any leaks are found during the test, drain the circuit before brazing/welding using the appropriate alloys.

Tools required

Braze-welding equipment

Spare Parts

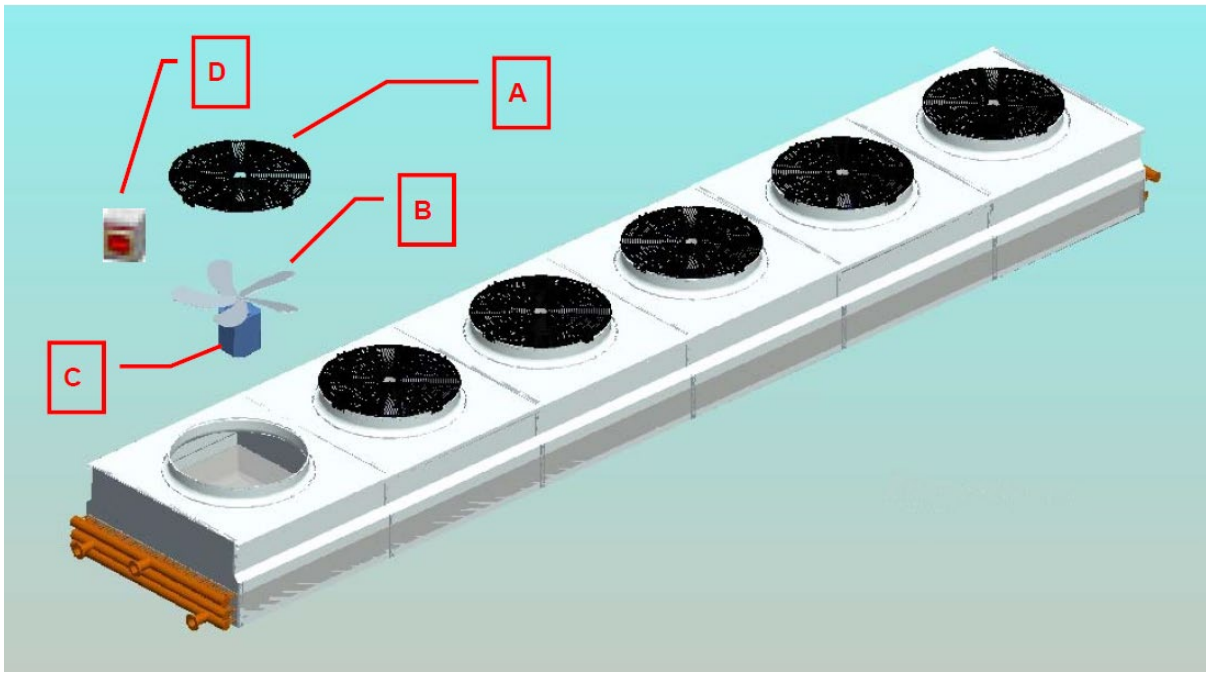

CODE	DESCRIPTION	INSTALLED QTY
A	Protection grid	See project datasheet
B	Fan impeller	See project datasheet
C	Electric Motor	See project datasheet
D	Isolating switch ON/OFF	See project datasheet

Technical specification

Rotating electrical machines

IEC handbook
TS 60034-25

Reference

- IEC TS 60034-25

  Rotating electrical machines

  Part 25: Guide for the design and performance of cage induction motors specifically designed for converter supply.

  http://www.iec.ch ☒ IEC website

  http://www.ied.ch/searchpub/cur_fut.htm ☒ Catalogue of IED publications

General

This document is a summarize of the information written in de specification IEC TS 60034-25. This paper specifies the handling and the changes when using a frequency convertor, for more detailed information please read the complete manual.

Cable Length

When an electrical cable (converter ➔ motor) with a length between 20 – 50 meters is used there will be a decrease in voltage rise time at the motor terminals (*graph 3.1*). This effect will have consequences for extra electrical stress in the windings (voltage overshoot).

This voltage overshoot is created by reflected waves at the interface between cable and motor terminals due to impedance mismatch. As the rise time decreases, so the frequencies present in the voltage waveform will increase.

An optimum installation regarding this effect is to have very little distance between converter and motor of less then 10cm, also the use of EMC-cables is recommended.

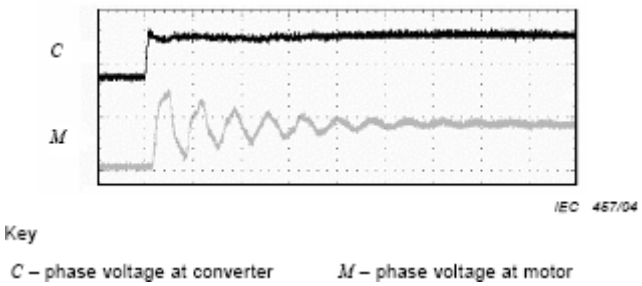

Graph 3.1, TS 60034-25

Bearing currents

Several situations can cause bearing currents. In all cases, bearing current will flow when a voltage is developed across the bearing sufficient to break down the insulating capacity of the lubricant, for additional information TS 60034-25.

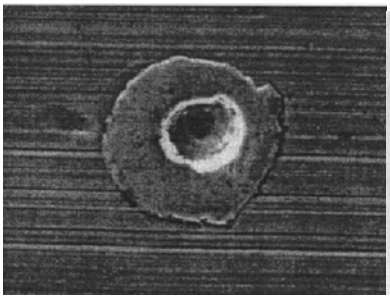

Picture 1.1

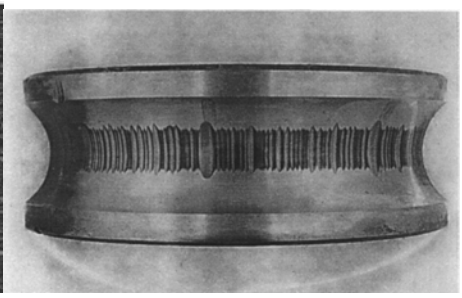

picture 1.2

Picture 1.1 displays a bearing that was exposed to an electrical discharge, picture 1.2 was exposed to excessive bearing current, picture 1.2

High frequency voltages

The most important factors that define which mechanism is prominent are the size of the motor and how the motor frame and shaft are grounded. The electrical installation meaning a suitable cable type and proper bonding of the grounding conductors and the electrical shield, also plays an important role, as well as the rated converter input voltage and the rate of rise of the converter output voltage. The source of bearing currents is the voltage across the bearing. There are three types of high frequency bearing currents: circulating, shaft grounding, and capacitive discharge.

Shaft grounding current

The current leaking into the stator frame needs to flow back to the converter, which is the source of the current. Any route back contains impedance, and therefore, the voltage of the motor frame in- creases in comparison to the source ground level. If the motor shaft is earth grounded via the driven machinery, the increase of the motor frame voltage is seen across the bearings. If the voltage rises high enough to overcome the insulating capability of the bearing lubricant film, part of the current may flow via that bearing, the shaft and driven machine back to the converter.

Capacitive discharge current

The internal voltage division of the common mode voltage over the internal capacitances of the motor may cause bearing voltages high enough to create high frequency bearing current pulses (referred to as Electrostatic Discharge Machining currents). This can happen if the shaft is not grounded via the driven machinery while the motor frame is tied to ground for protection.

Preventing high frequency bearing current damage

There are three basic approaches used to prevent high frequency bearing currents, which can be used individually or in combination:

- a proper cabling and grounding system;
- modifying the bearing current loops;
- to use a converter with a filter designed to reduce the zero-sequence component of the phase voltages (so-called common mode voltage);

All these tend to *decrease the voltage across the bearing lubricant* to values that do not cause high frequency bearing current pulses at all or dampen the value of the pulses to a level that has no effect on bearing life. For different types of high frequency bearing currents, different measures need to be taken. The basis of all high frequency current solutions is the proper grounding system. Standard equipment grounding practices are mainly designed to provide a sufficiently low impedance connection to protect people and equipment against system frequency faults.

Other preventive measures

- Use a filter that reduces common-mode voltages and/or dv/dt;
- Avoid the use of double transitions (parallel switching);
- Use insulated bearing(s);
- For more preventive measures please read TS-60034-25

Effectiveness of bearing current Countermeasures

For troubleshooting bearing currents, we advise reading the IEC TS 60034-25:2004 Technical Specification.

Chapter 8 “Bearing currents” page 31 - 38

In special Table 5 “Effectiveness of bearing current countermeasures” page 37

Appendix A: Grounding

The objectives of grounding are safety and reliable, interference-free, operation. Traditional grounding is based on electrical safety. It helps to ensure personal safety and limits equipment damage due to electrical faults. For interference-free operation of the PDS more profound methods are needed to ensure that the grounding is effective at high frequencies. This may require the use of equipotential ground planes at building floor, equipment enclosure and circuit board levels.

In addition, correct grounding strongly weakens motor shaft and frame voltages, reducing high frequency bearing currents and preventing premature bearing failure and possible damage to auxiliary equipment.

For connection instructions please read the converter and motor manual. For a detailed description of connecting and problems with converters we refer to the connection/grounding instructions of the invertor/motor and IEC TS 60034-25.

alfa.luvegroup.com