Optigo SFMC

Cubic commercial air coolers
for A2L refrigerants

Instruction manual

ORIGINAL INSTRUCTIONS

31481875EN-02

Index

1 Important information

1.1 Disclaimer

This Instruction Manual applies to all Optigo SFMC air cooler products. Manual must be carefully examined and instructions should be followed up at all times.
Alfa LU-VE does not accept liability for any damage resulting from non-compliance to the instructions as given in the manuals and order-related documents.

1.2 Intended use

Air coolers are partly completed machinery according to Machine Directive 2006/42/EC and are intended for incorporation in cooling systems. Declarations of Incorporation are available on alfa.luvegroup.com. The product is built according to the following standards:

- PED 2014/68/EU
- Safety of Machinery EN 60204-1
- Directive 2014/30/EC and subsequent modifications. Electromagnetic compatibility.
- Low Voltage - Reference Directive 2014/35/EC

However it is forbidden to operate our equipment before the machine incorporating the products or making part thereof has been declared to be in conformity with the EC Machine Directive.

1.3 Where to find product information

Detailed technical data for individual product models are available in order related documents, on the product label and in product data sheets. Comprehensive technical information for all Alfa LU-VE air heat exchanger products is available on-line on alfa.luvegroup.com. This includes:

- Product manuals
- Instruction manuals
- Product leaflets & brochures
- Product data sheets (selection software)
- Dimensional drawings
- Certificates

Alfa LU-VE offers world-wide service and support. In case of any questions or uncertainty please contact your local Alfa LU-VE representative.
Contact addresses are available at alfa.luvegroup.com.

alfa.luvegroup.com/sfmc

1.4 Warning symbols

The following warning symbols are used in Alfa LU-VE instruction manuals.

	General warning. Risk of malfunctioning and/or damage.		Hot surfaces. Danger of burns. Wear adequate protection.
	Moving parts. Danger of injuries. Do not operate without protection guard mounted.		Sharp surface. Danger of cutting injuries. Wear adequate protection.
	Overhead load. Never stand or walk below the load.		Mandatory prescription. Follow instructions as provided.
	Forklift trucks or other logistic vehicles. Stay clear of working space.		Risk of injuries. Wear head protection.

	Electrically powered component. Switch off power supply before any maintenance or installation activity.		Risk of injuries. Wear safety footwear.
	Cold parts. Danger of frostbite injuries. Wear adequate protection.		Risk of injuries. Wear protective gloves.
	A2L flammable gas.		

1.5 Health, safety and hygiene

Ensure that the following guidelines are observed:

- All work on the equipment must be carried out by trained personnel.
- The electrical supply is suitable for the equipment supplied.
- Refrigerant, temperature and pressure must agree with the data on the product label of the relevant heat exchanger.
- As the heat exchanger is supplied indirectly, the producer is not acquainted with its actual application.
- The heat exchanger should be installed in conformance with the recognized national standards of electrical and refrigeration installation practice.
- The supplied heat exchanger is optimized for the refrigerants as stated in the data sheet or order documents. The allowed maximum pressure is noted on the type plate. During production the heat exchanger was subjected to a strength test exceeding the design pressure. However, during normal use the design pressure may not be exceeded.
- Heat exchangers supplied by Alfa LU-VE are normally not equipped with a high-pressure cut out. The installer is responsible for fitting a high-pressure cut out on the system in which the heat exchanger is used.
- The heat exchanger shall not be blocked in. If the ambient temperature rises, the pressure could rise and exceed the design pressure.
- It is not permitted to use the heat exchanger for any purpose other than the one it was designed for by Alfa LU-VE.
- If the equipment is used in the food industry, responsibility with regard to hygienic conditions lies with the end user.

1.6 Use of flammable gas

- The product must be stored and installed in rooms where the use of open flames or other ignition sources is forbidden
- During transport, handling, installation, the product and, in particular, the pipes must be protected to avoid physical damage which may cause it breakage.
- In the event of suspicious damages or doubts about the correct handling (eg. damaged packaging) do not install the product before carrying out a thorough integrity check.
- Install the product only and exclusively in places that comply with the minimum size and/or air exchange requirements established by the applicable standards, in relation to the total charge of flammable fluid provided for in the installation in which it is incorporated.
- All ordinary and extraordinary maintenance operations must be performed only by qualified personnel in the use of equipment with flammable fluid. special attention to operations that require interventions on the pipes.
- The use of refrigerants different than those indicated in the data plate or in this manual is forbidden.
  In general, the use of refrigerants that are not included in the list of the IEC 60335-2-40 Annex b standard is forbidden.
- Before performing any maintenance operation, exclusively by qualified staff, perform a check for the absence of gas in the room and around the product through an appropriate detector.
- Before performing any operation for opening the pipes of the refrigerant circuit, by means of mechanical operations or with open flames, make sure that the circuit does not have any

quantity, even minimal, of inflammable gas and that it has been washed internally with inert gas (ex. nitrogen). all operations must be performed by personnel qualified in the use of flammable gases.

- The product shall not be modified in any part of it, by removing or adding component.s
- The product is not an Atex product. The connection of any system component that is not already assembled in the factory, must take place outside the product, at an appropriate distance and check that its installation complies with all the regulatory requirements applicable to flammable gas systems.
- The product is not an Atex product. It is the responsibility of the installer to verify the compliance of the product and its incorporation in the system to european and national standards.
- In the case of components that must necessarily be installed inside the product, the compliance of the final assembly is the responsibility of the installer. in particular:
  - the use of any component, electrical or mechanical, which may be the origin of sparks or flames, is forbidden. Only the exclusive use of components suitable for use in explosive atmosphere (Atex) is allowed.
  - the use of components that may be cause of flammable gas leaks is forbidden.
    The installation of components of the refrigerant circuit is allowed only with permanent brazed connection.

1.7 Checks at delivery

At the moment of delivery, carefully check the units.
All finned coils are pressure tested with dry air, sealed and supplied with a slight overpressure. Prior to installation, the leak resistance must be checked with the Schrader valve.
Any present damage must be reported on the delivery note with a description of the damage.
Damaged heat exchangers, including when the damage is not externally visible, are to be reported to the shipping agent and Alfa LU-VE within 24 hours.

1.8 Return of unused heat exchangers

Air heat exchangers that have been delivered in accordance with orders are in principle not returnable. Heat exchangers can only be returned under certain conditions and following consultation with Alfa LU-VE. This applies exclusively to unused units. The heat exchangers that are to be returned should be delivered carriage paid to Alfa LU-VE in the original, undamaged and unwritten factory packaging. Not returnable are:

- Heat exchangers older than three months from the invoice date.
- Heat exchangers that have already been built in and/or are damaged.

1.9 Guarantee

For our guarantee conditions, we refer to the Terms of Delivery. In general, the warranty period between Alfa LU-VE and the customer is 24 months from factory invoice date or 12 months of operation, which ever comes first. Heat exchangers must not be returned or disposed of, other than in accordance with instructions from Alfa LU-VE. Contact your local Alfa LU-VE representative before any remedial action is taken on the units, otherwise warranty may be void.

1.10 Disposal

After decommissioning the heat exchanger coil should be emptied from refrigerant fluids. Avoid any emissions in the environment. Any refrigerants and oil residuals must be properly disposed of according to applicable environmental regulations. The fully emptied heat exchanger unit, including all electrical components, should be handed in to the proper authorized companies for recycling.

2 Product description

2.1 General information and application

Optigo SFMC are cubic commercial air coolers suitable for the safe use of ASHRAE A2L refrigerants. A2L refrigerants have a minimal impact on global warming and they will bring maximum energy efficiency. So today, they are the best technological solution for air conditioning and refrigeration applications, outside the natural refrigerants. General application for Optigo SFMC are in small to medium-sized cooling rooms.

- Available in 3 fan diameters
  SF27MC: Ø 275 mm
  SF31MC: Ø 315 mm
  SF35MC: Ø 350 mm
- Refrigerants:
  - Air defrost: certified for the use of any A2L refrigerants
  - Electric defrost: certified for the use of the only A2L refrigerants listed on the IEC standard 60335-2-40 (R-32, R-1234YF, R-1234ZE (E), R-444A, R-444B, R-447B, R-451A, R-451B, R-452B, R-454A, R-454B, R-454C, R-455A)
- Design pressure: 24 bar
- Capacity (SC2 with R404A): 1.05 up to 20.20 kW
- Air flow: 900 up to 10,400 m³/h
- Min. room temperature: - 25 °C

2.2 Standard configuration

- High-efficiency coil manufactured from internally grooved Cu tubes and louvered aluminium fins.
- Standard fin spacings: 4.5, 6, 7 mm; 9 mm only for SF31MC and SF35MC.
- Optigo SFMC coolers are available with 1 to 4 fans fitted with high efficiency EC fan motors drawing through the coil: single speed for SF27MC, dual speed for SF31MC and SF35MC. Motors with external rotor for Optigo SF31MC and SF35MC models. Power supply 230/50/1. Fan motors are wired to a central connection box.
- Durable galvanized steel casing, powder coated RAL 9003. Dismountable and openable casing for cleaning and inspecting purposes. Optimized driptray with rounded edges. Optigo SF31MC and SF35MC models fitted with hinged side panels and driptray.
- Each heat exchanger is leak tested with dry air and finally supplied with a dry air pre-charge. Fitted with Schrader valve on the suction connection for testing purposes.
- Delivered on a wooden pallet, either covered with a reinforced cardboard box or a wooden crate (SF35MC models with 4 fans).

2.3 Options

- Electric defrost in coil (E)
  For cold rooms with room temperatures below 4 °C frost build-up is likely, the application of a defrosting system is recommended. The stainless steel defrost elements are connected to dedicated terminal box. Certified for the use of the only A2L refrigerants listed on the IEC standard 60335-2-40 (R-32, R-1234YF, R-1234ZE (E), R-444A, R-444B, R-447B, R-451A, R-451B, R-452B, R-454A, R-454B, R-454C, R-455A)
- Driptray heater (HD)
- Electric defrost in coil + Driptray heater (E+HD)

Model	Fin spacing	N	E	HD	E+HD
SF27MC	all	standard	✓	✓	✓
SF31MC	4.5, 6	standard	✓	✓	✓
SF31MC	7, 9	standard	n.a.	n.a.	✓
SF35MC	all	standard	n.a.	n.a.	✓

- Coil protection: Alupaint (AP)
- Fan shroud heater (FRH)
- Driptray insulation (IS)
- Insulated suction hood

2.4 Code description

SF27MC	-	2	1	-	4	N	AL	BP	-	FRH
1		2	3		4	5	6	7		8

1 Optigo SFMC A2L safety compliant cubic commercial unit coolers (SF27MC=Ø 275 mm, SF31MC=Ø 315 mm, SF35MC=Ø 350 mm)
2 Number of fans (1 to 4)
3 Coil type (1, 2)
4 Fin spacing (4=4.5, 6=6.0, 7=7.0, 9=9.0 mm)
5 Defrost system (N=air defrost, E=electrical defrost in coil, HD=driptray heater, E+HD=electric defrost in coil+driptray heater)
6 Fin material (AL=aluminium, AP=pre-painted aluminium)
7 Packing (BP=box+pallet, CR=crate)
8 Options

3 Product labels

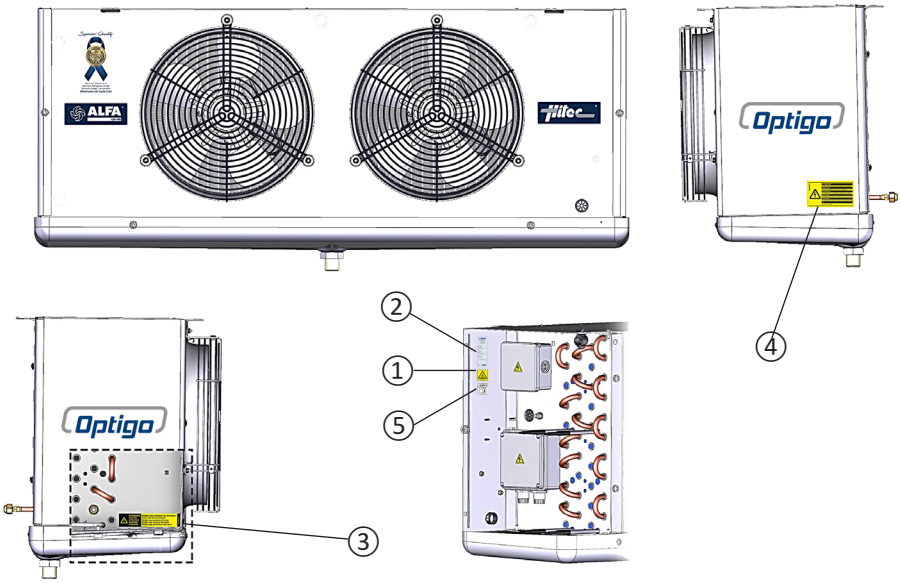

1. Flammable gas
Use of flammable gas.

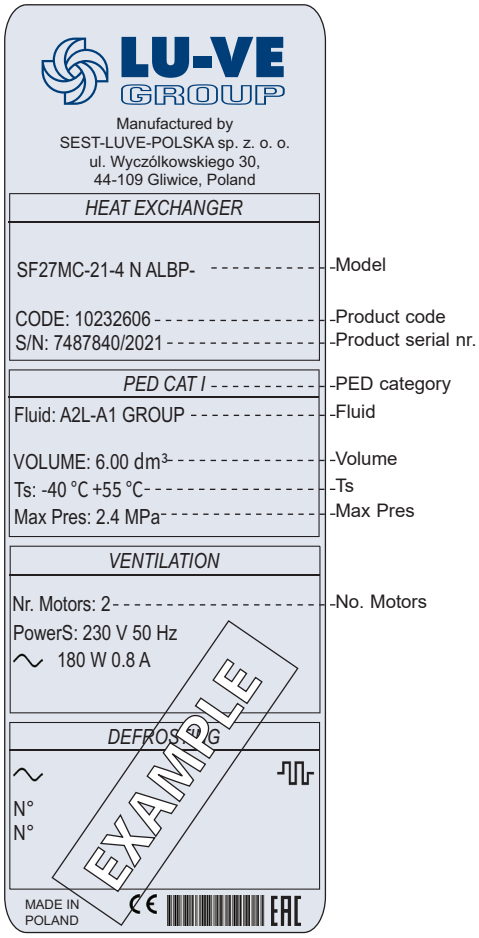

2. Product label

This label is positioned inside the casing.

Model	Refer to paragraph "2.4 Code description"
Product code Product Serial nr.	Communicate these when ordering spare parts as they identify the unit
PED Category	According to PED
Fluid	Refrigerant*
Volume	Coil Volume
Ts	Range of operating temperatures for the coil
Max Pres	Max working pressure
No Motors	Number of fans

*Air defrost: A2L, A1 refrigerant group
Electric defrost: R-32, R-1234YF, R-1234ZE (E), R-444A, R-444B, R-447B, R-451A, R-451B, R-452B, R-454A, R-454B, R-454C, R-455A, A1

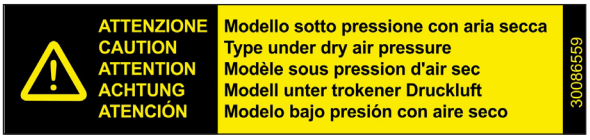

3. Precharge warning

Units are delivered from the manufacturer with an overpressure. Check pressure on the Schrader valve. With unpressurised unit: immediate report to manufacturer and note on bill of delivery.
When installing the unit ensure the Schrader valve is removed.

4. Electrical warning

Electrically powered component. Switch off power supply before any maintenance or installation activity.

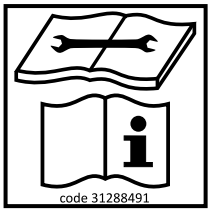

5. Refer to instruction manual

Manual must be carefully examined and instructions should be followed up at all times.

4 Transport and storage

During transportation the heat exchanger must be handled with all required care. Any instruction or warning signs attached to the heat exchanger or the packaging must be followed. Avoid shocks or continuous vibrations during transport. These may cause damage to the product. If required, consult Alfa LU-VE and disassemble during transport any parts that are likely to be set into vibration. Air heat exchangers must be adequately fixed on the transport vehicle. If temporary storage of the heat exchanger is required, the following points should be observed:

- Store the heat exchanger in its packing, in a dry place with sufficient protection against sun and other environmental influences.
- Always place air heat exchangers on an even surface.
- Do not stack air heat exchangers unless explicitly indicated this is allowed.
- Storage temperature between -40° C and +50 °C.
- Never open or remove the Schrader valves before unit installation. Overpressure in the coil must be maintained.

Shelf life of air coolers is one year. If longer storage periods occur, check:
- Proper functioning of the fan motor.
- Mounting brackets, lifting lugs and fan fixings for corrosion.

5 Unpacking and lifting

SFMC models are delivered on a wooden pallet, either covered with a reinforced cardboard box or a wooden crate (SF35MC models with 4 fans).
Handling and positioning can take place manually (smaller models) or with use of a forklift.

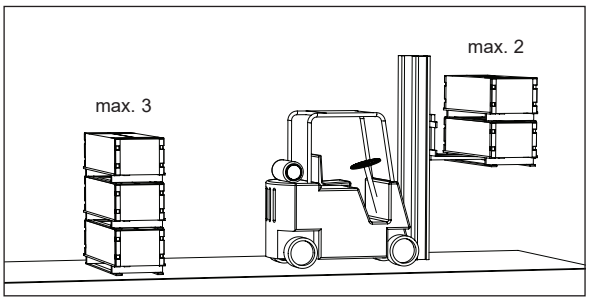

Packed air coolers may be stacked during transportation (max. 2) and storage (max. 3). Respect the maximum number of stacked air cooler units.

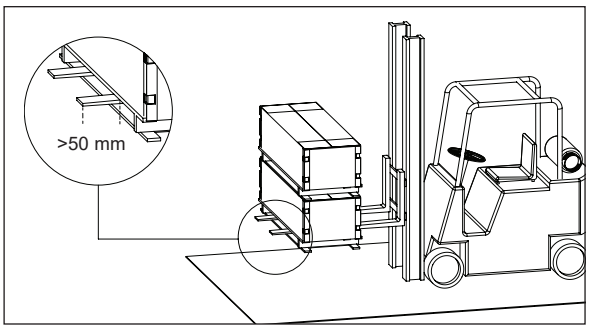

In order to avoid damage to the air cooler or falling of the unit, ensure that the lifting forks cover all beams from the lower support pallet.

5.1 Units packed with cardboard box

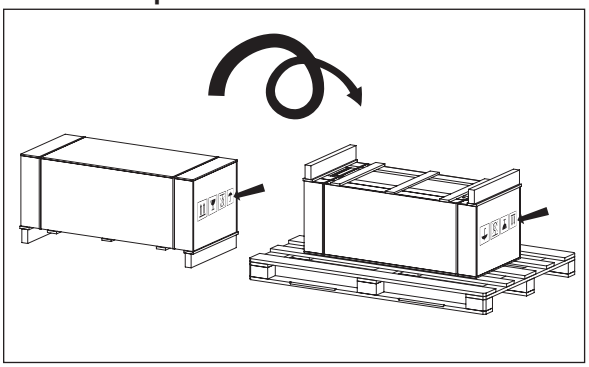

Place the unit on the ground and manually turn the air cooler into mounting position on a second wooden pallet. Keep the packaging material in place to prevent the drip trays from damaging.

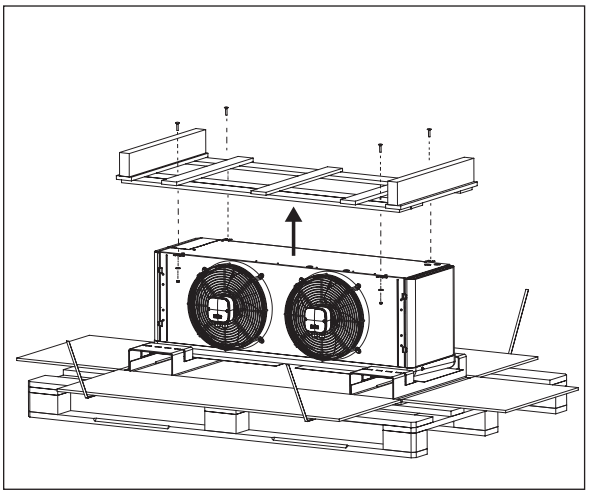

Remove the cardboard box.
Unscrew the fixings from the original support pallet (now on top) and remove it.
The cooler is now in mounting position.

5.2 Units packed with crate

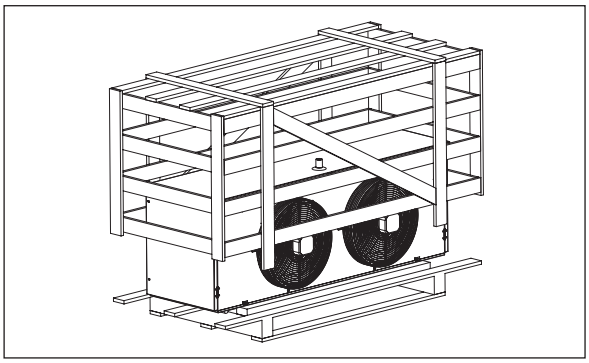

Place the unit on the ground and loosen the fixing materials from the top crate.
Remove top crate.

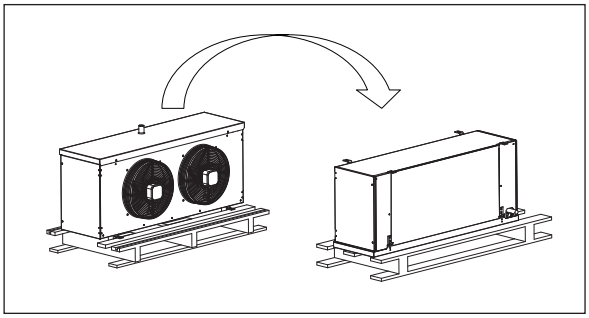

Unpacked coolers must be turned before mounting.
Manually turn the air cooler into mounting position on a second wooden pallet. Use adequate protective material to prevent the driptray from damaging. The cooler is now ready to be lifted into mounting position.

5.3 Lifting

Ensure that the cooler is not lifted directly onto the drip tray or the finned coil. Utilizing the proper wooden transport beams and/or pallets prevents the cooler bending at the extremes such that the cooling circuit or other components are damaged.

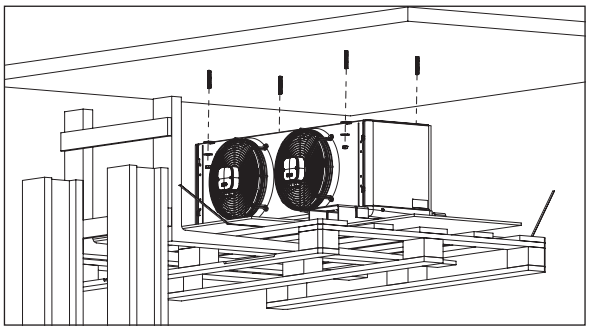

All lifting procedures must be carefully carried out by properly qualified personnel, ensuring absolute safety at all times. Lift the unit to mounting position and secure following instructions given in chapter "6 Installation".

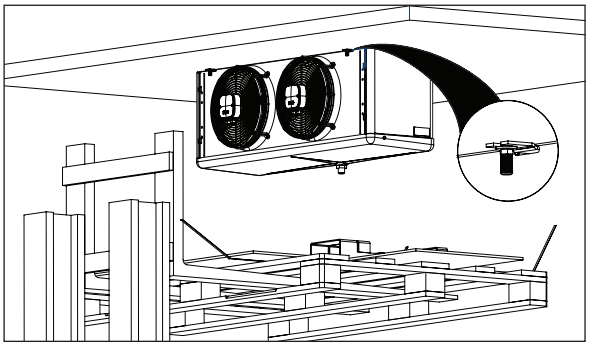

After having secured the cooler, the forks may be lowered and the remaining packaging materials can be removed.

6 Installation

6.1 Mounting dimensions

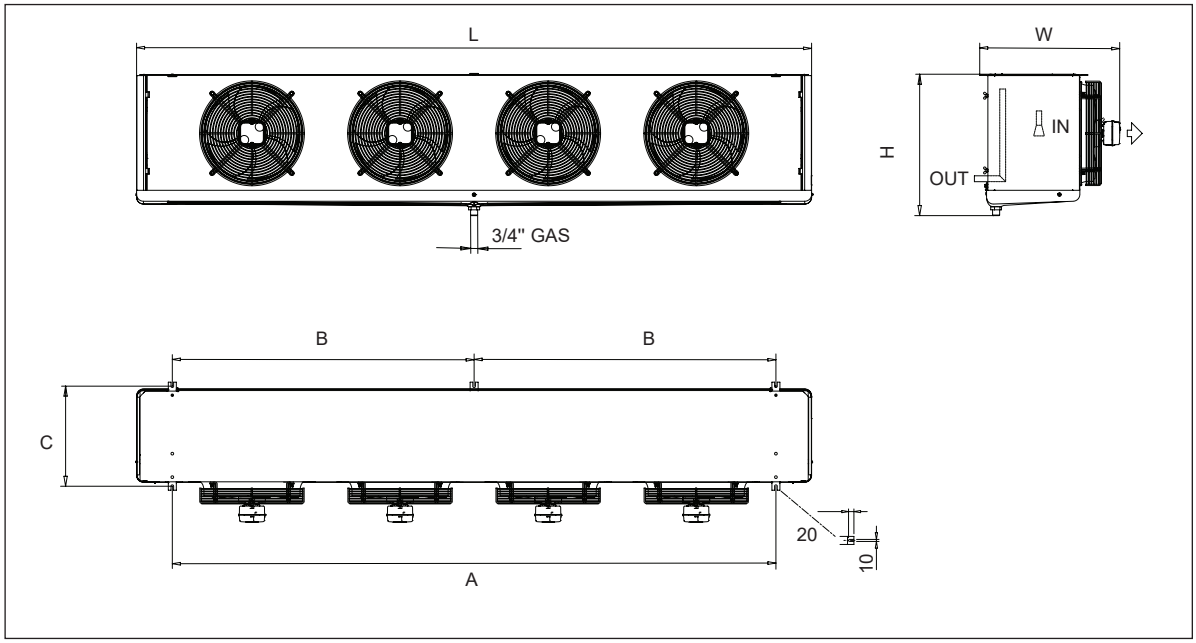

Model	n. of fans	Dimensions (mm)					
		L	A	B	C	W	H
SF27MC	1	680	412	-	298	365	461
SF27MC	2	1050	782	-	298	365	461
SF27MC	3	1420	1152	-	298	365	461
SF27MC	4	1790	1522	-	298	365	461
SF31MC	1	770	492	-	375	500	460
SF31MC	2	1220	942	-	375	500	460
SF31MC	3	1670	1392	-	375	500	460
SF31MC	4	2120	1842	-	375	500	460
SF35MC	1	870	597	-	375	525	530
SF35MC	2	1425	1152	-	375	525	530
SF35MC	3	1980	1707	-	375	525	530
SF35MC	4	2535	2262	1131	375	525	530

Coolers must be hung such that the coolers can contract and expand somewhat. Cooler contraction occurs during refrigeration operation, and cooler expansion occurs during defrost. For air coolers with copper tubing this figure runs up to 1.65 mm per meter cooler length. All heat exchangers must be set up level.

Weight information are listed on the product label and/or in the relevant product documentation.

Detailed drawings showing all required mounting and refrigerant connection dimensions are available available for download on alfa.luvegroup.com.

Dimensional drawings

6.2 Mounting bracket

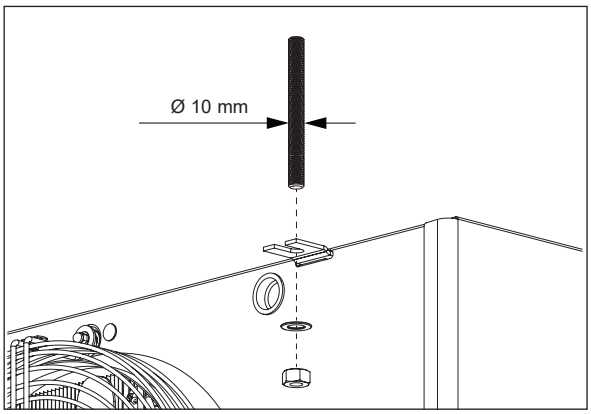

Use suitable studs when mounting the unit to the ceiling.
Fix the unit to cold room ceiling by securely tightening nuts and washers.

6.3 Technical spaces

Heat exchangers should be positioned such that the following criteria are met:

- Adequate space must be left on the air inlet side of the heat exchanger. The air discharge side should be free of restrictions. Recirculation of air is to be avoided.
- The heat exchangers should not be connected to ducting on either the air inlet side or discharge side, unless the heat exchanger has been specifically designed for such an application.

It is important to remember that the total amount of heat to be dissipated depends on receiving the full design air volume at the design entry air temperature which allows this air to be freely discharged after passing through the heat exchanger. Any restrictions may impair the performance of the cooler. If in doubt, please check with Alfa LU-VE.

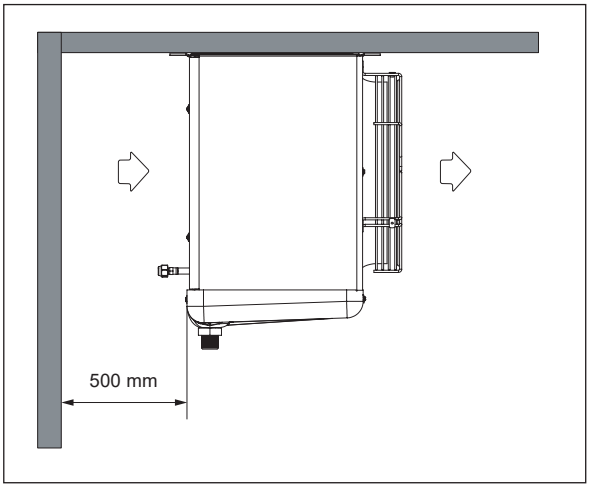

Respect the minimum wall distance on suction side.

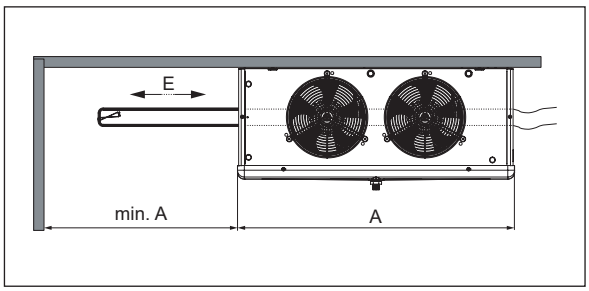

Respect the minimum space for electric defrost extraction and replacement.

6.4 Refrigerant connections

All pipework and connections must be made in accordance with good refrigeration design and installation practice.
Before performing the connection, ensure that no flammable gas is present in the system and in the product.
Ensure that no stresses are transmitted to the pipework. All pipework should be adequately attached to the walls/ceilings of the cold room and not only to the cooler itself. Pipework must be adequately supported to prevent vibration or external load on the cooler headers, etc.
Components that may cause gas leaks (for example pressure points) must not be installed inside the product. All refrigeration connections must be made by brazing.
Do not adapt headers position to the suction line.

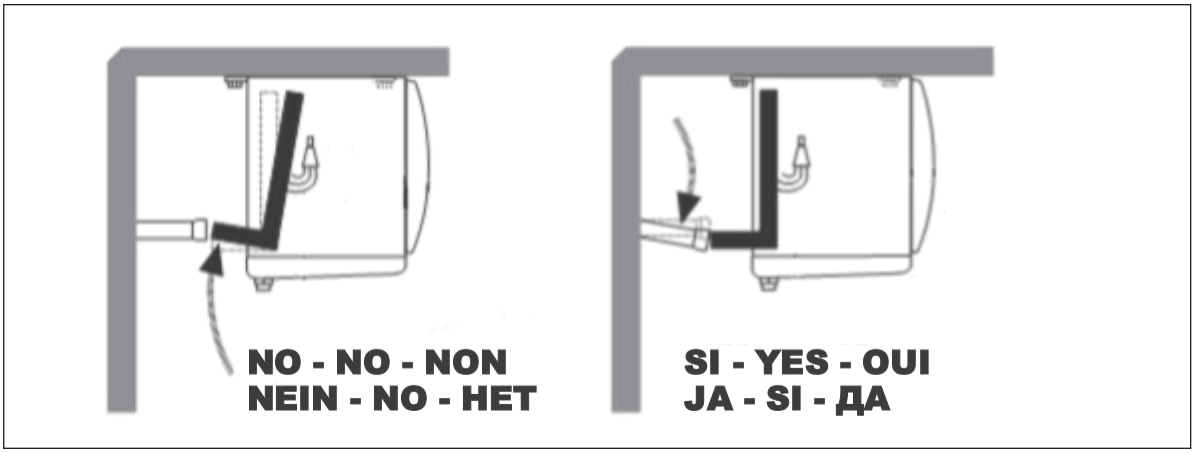

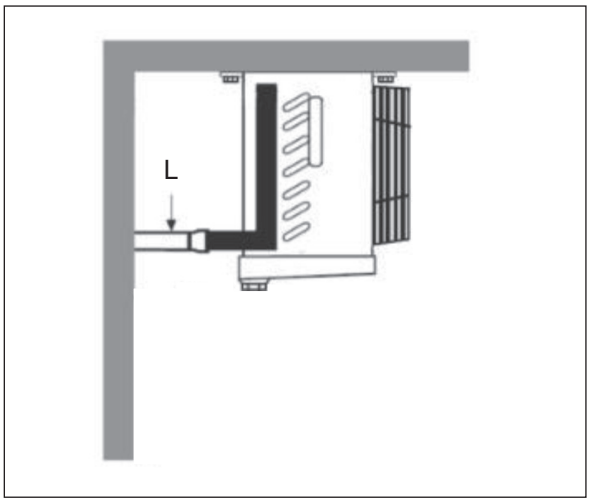

Ensure the supply circuit is closed (no pressure) before connecting the suction lines.
Open side covers.
Connect the suction line line (L).

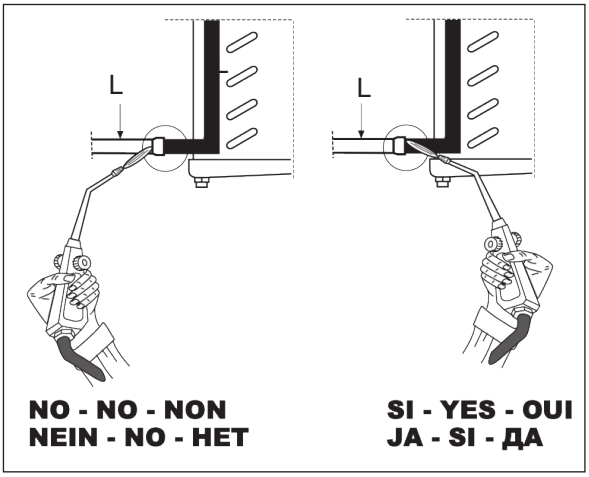

Ensure the flame nozzle is not aimed at the equipment, when welding.

6.5 Cooler capacity check

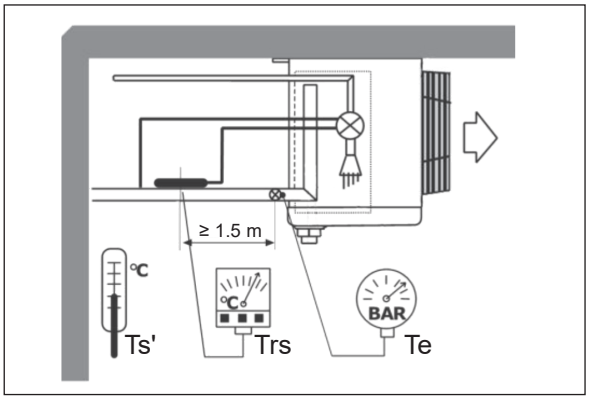

Ts'=cold room air inlet temperature.
Te=evaporating temperature. It is related to the refrigerant pressure on the unit cooler outlet.
Trs=refrigerant superheat temperature, on suction line near thermostatic valve bulb.
(Trs-Te)=superheat

(Trs-Te) ≤ 0.7 x (Ts'-Te)

Keep the superheat as low as possible to obtain maximum unit cooler performance.
The thermostatic valve fitted must be correctly sized for the installation conditions and adjusted for correct system operation.

6.6 Drain line

Check all drain lines and drip trays to ensure that no improper material such as, e.g., packaging material blocks the drain.

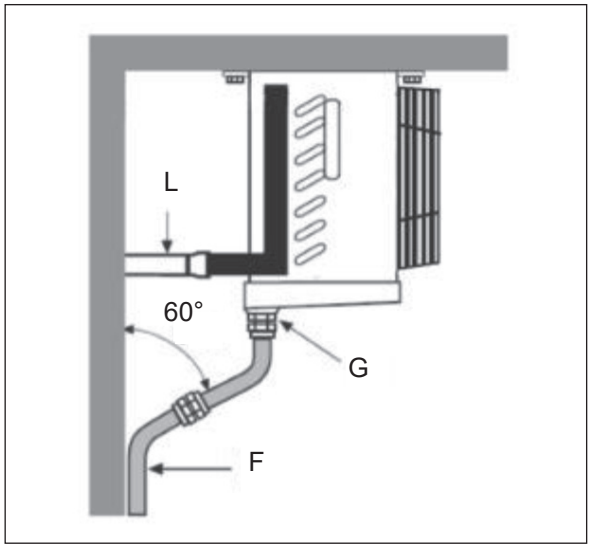

Connect the drain tubing (F) to the drain connection (G).
All pipework should be adequately attached to the walls/ceilings of the cold room and not only to the cooler itself.

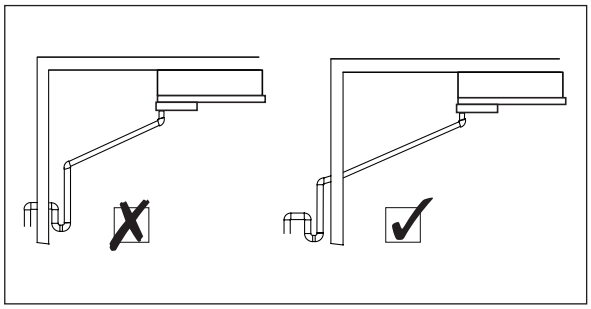

The drain line diameter must be at least the size of the driptray drain diameter and should be laid with an adequate slope. For room temperatures below 0 °C drain line insulation and defrosting are required.

A syphon must be installed on the drain line, outside the cold room.

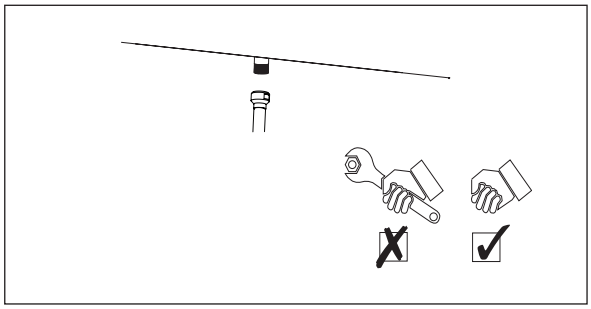

Tighten drain connection by hand only.

6.7 Electrical connections

All electrical connections must be made in accordance with the locally valid regulations and in conformance with good installation practice. The site supply voltage, frequency, accepted power rating and number of phases must comply with the details on the technical documentation. All electrical supply lines must be connected to the terminal boxes through suitable waterproof glands using bottom entry or, in case of horizontal installation, the cable is routed to form a water trap.
If the heat exchangers are installed and there is to be an appreciable delay in putting the plant into operation, a temporary electrical supply should be connected to each motor, sufficient to run for at least 4 hours. This procedure should be carried out at least once every 4 weeks, until the heat exchanger is fully operational. It is up to the end user to verify the conditions for protection by automatic disconnection of supply, according to applicable standards. Heat exchangers are designed for TN power systems. The insulation fault protection must be part of power supply of the heat exchanger and is not supplied by the manufacturer.
The following data determine which connection diagram is to be selected and respected for electrical installation:

- Heat exchanger model indication
- Fan motor type
- Electrical options

When in doubt always contact your local supplier or Alfa LU-VE representative for assistance.
Ensure complete electrical isolation before performing any wiring.

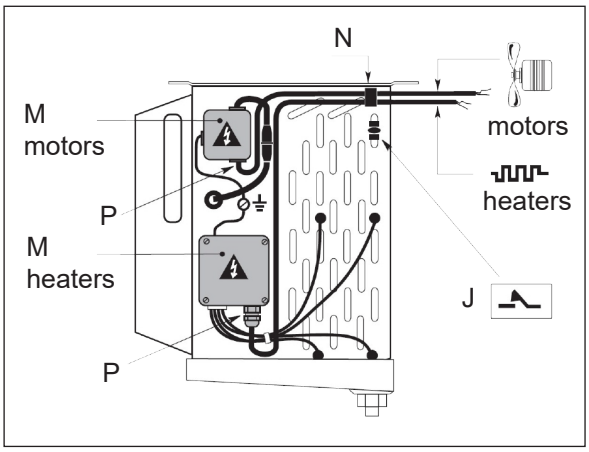

In accordance with the current legislation, install a single pole terminal in a visible position between the unit and the power supply. Opening between terminals 3 mm at min.

Remove the terminal block cover (M).
Insert the cables into the grommet (N) and block them with their respective gland. Connect terminals by following the wiring diagrams on the cover. When all connections are made refit the terminal block cover.

For systems using electrical defrost, a defrost termination thermostat should be used, having a range of 10 °C to 20 °C with a sensor attached to the top return bends of the coil block or buried in the top of the coil block fins (J).

Use only Atex certified thermostat, for use in explosive atmosphere.

Any electrical component not supplied with the appliance must be installed outside the unit.

6.8 Power failure

In order to avoid damage to the compressor, the refrigerant supply must be closed in the event of power failure, e.g. by closing the magnetic valve. Safety measures elsewhere in the system will prevent the pressure in the heat exchanger from exceeding the design pressure.

6.9 Fan motors connections

The maximum load of the motors and the recommended settings for the overload relays are to be respected. The built-in thermal overload protection must be integrated in the control circuit when a connection in the terminal box is present. The electrical control circuit should be arranged with a manual reset device in order to prevent continuous on/off switching (tripping) of the motors. Suppliers and manufacturers of electrical motors provide no guarantee for motors that are combusted through overload.
Ensure complete electrical isolation before performing any wiring.

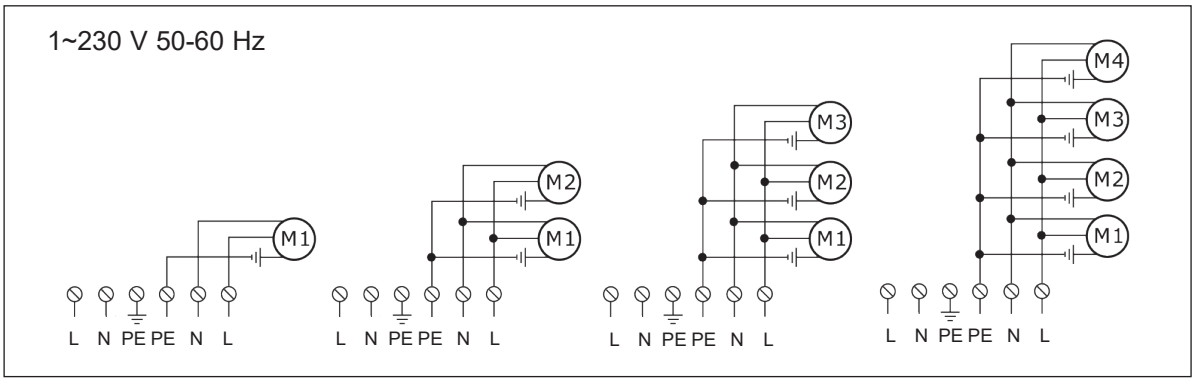

Type	Power supply	Ø	Motor power consumption			
			n. of fans			
			1	2	3	4
EC	1~230 V - 50/60 Hz	275	28 W 0.2 A	56 W 0.4 A	84 W 0.6 A	112 W 0.8 A
EC	1~230 V - 50/60 Hz	315	66 W 0.6 A	132 W 1.2 A	198 W 1.8 A	264 W 2.4 A
EC	1~230 V - 50/60 Hz	350	143 W 1.2 A	286 W 2.4 A	429 W 3.6 A	572 W 4.8 A

For SF31MC and SF35MC with EC motors:

Junction box - 2 speed

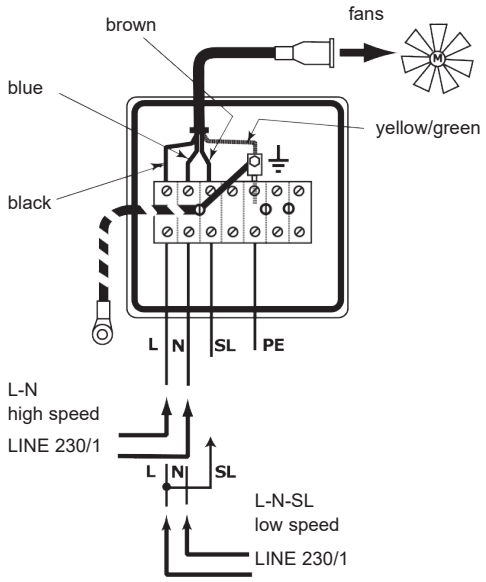

6.10 Defrost

Always refer to the electrical scheme for both connections and nominal voltage of the electrical defrost option. Earth cable must always be wired and connected to the appropriate terminal in the connection box. Always refer to the electrical scheme order to identify the ground terminal.
Warning about the neutral wire: it must be connected if indicated in the electrical scheme. It must not be connected if it is not shown in the electrical scheme.
Coolers without defrosting facilities may not be used in room temperatures below +2 °C.
If the cooler is working on a time termination cycle, it is suggested that an initial defrost period be set at 35 to 45 minutes (in combination with the number of defrost periods). This setting is to be refined through trial and error, according to the actual defrost requirements depending on cooler model, size, and working conditions. If the defrosting cycle is terminated via a temperature sensor, close attention must be taken in positioning the thermostat sensor. The temperature sensor is usually set at a value between 10°C and 15°C. In general it should be positioned where the last traces of frost disappear, usually on the coil.
At room temperatures of around 0°C the last frost is usually in the top of the coil block. At room temperatures below -20°C, this is the consequence of the so-called 'chimney effect', usually in the lower half of the coil block at approx. ¼ of the fin height. Unfortunately a number of factors (cooler position relative to an access door or stored products, precise setting of the thermostatic expansion valve, etc.) may cause identical coolers to perform differently. Thermostat sensors should NOT be placed in the direct vicinity of a heater element. The final position of the temperature sensors must be determined through trial and error.

6.11 Defrost connections (SF27MC models - optional)

Ensure complete electrical isolation before performing any wiring.

SF27MC

n. of fans	Electric defrost in coil (E)		
	n.	W (x1)	W tot
1	2	610	1220
2	2	1080	2160
3	2	1540	3080
4	2	2000	4000

n. of fans	Fan shroud heater (FRH)		
	n.	W (x1)	W tot
1	1	130	130
2	2	130	260
3	3	130	390
4	4	130	520

In case both E and FRH are mounted, the total power consumption is the sum of each consumption.

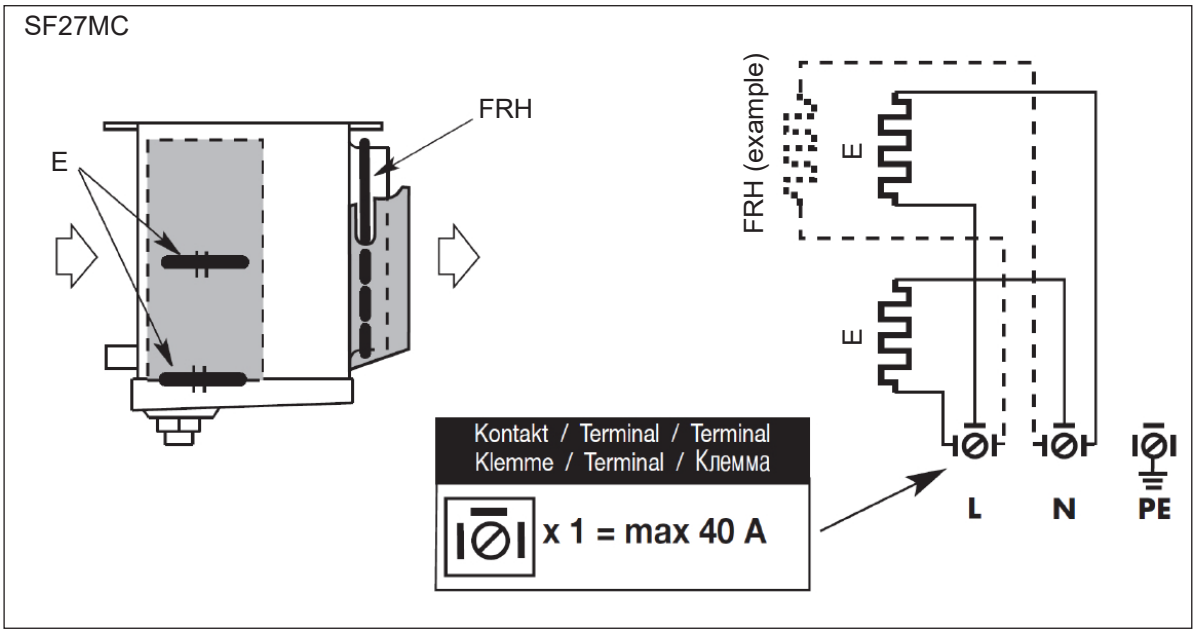

Heavy electric defrost

n. of fans	Electric defrost in coil (E)		
	n.	W (x1)	W tot
1	3	610	1830
2	3	1080	3240
3	3	1540	4620
4	3	2000	6000

n. of fans	Driptray heater (HD)	
	n.	W (x1)
1	1	200
2	1	350
3	1	480
4	1	650

In case both E and HD are mounted, the total power consumption is the sum of each consumption.

SF27MC

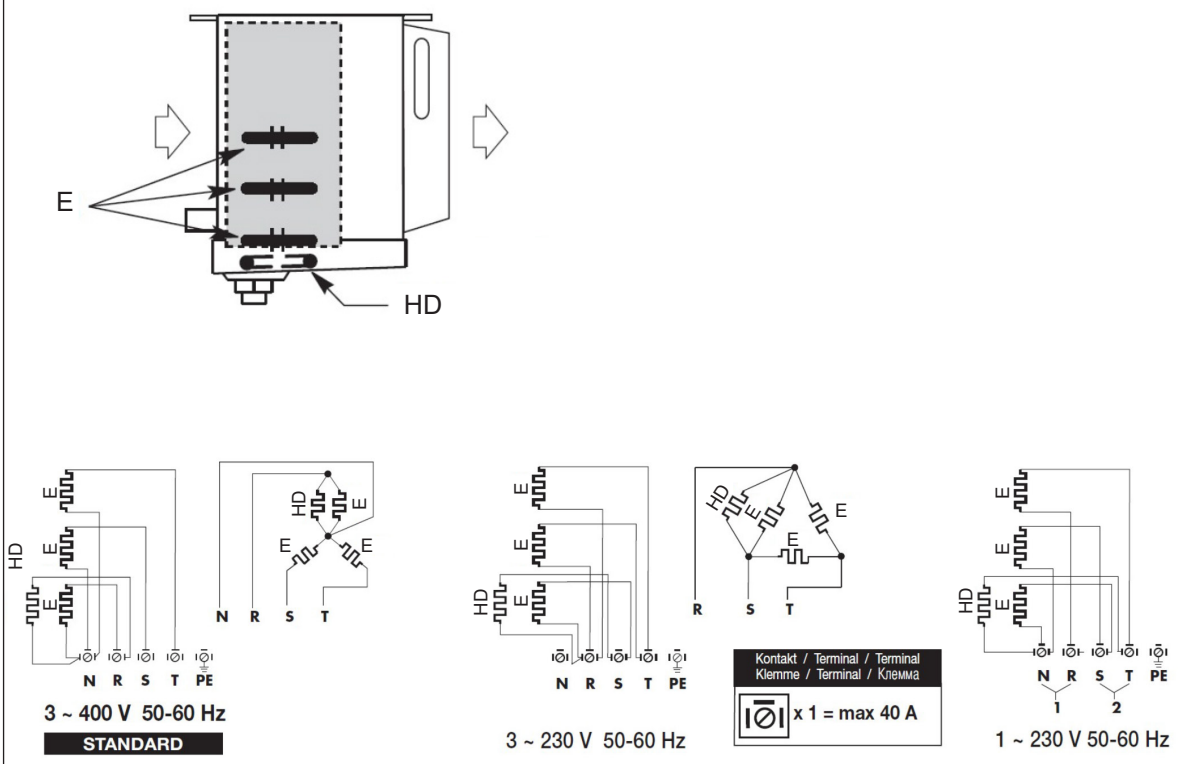

6.12 Defrost connections (SF31MC models - optional)

Ensure complete electrical isolation before performing any wiring.

SF31MC

n. of fans	coil type	Electric defrost in coil (E)			Driptray heater (HD)	
		n.	W (x1)	W tot	n.	W tot
1	1	2	850	**1700**	1	**235**
	2	3	850	**2550**	1	**235**
2	1	2	1450	**2900**	1	**415**
	2	3	1450	**4350**	1	**415**
3	1	2	2025	**4050**	1	**600**
	2	3	2025	**6075**	1	**600**
4	2	3	2600	**7800**	1	**775**

n. of fans	Fan shroud heater (FRH)		
	n.	W (x1)	W tot
1	1	145	**145**
2	2	145	**290**
3	3	145	**435**
4	4	145	**580**

In case one or more options are mounted, the total power consumption is the sum of each consumption.

SF31MC

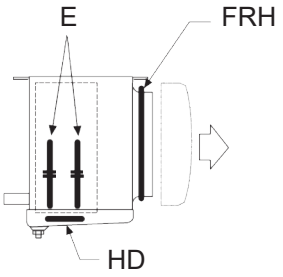

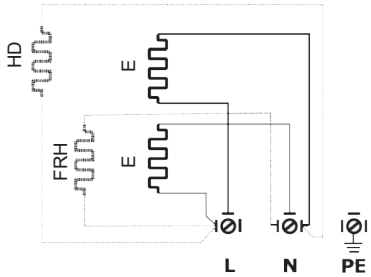

Terminal
x1 = max 40 A

1~230 V 50-60 Hz

SF31MC

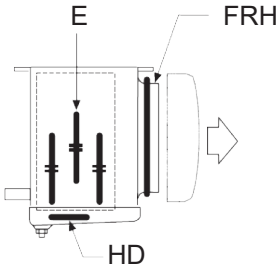

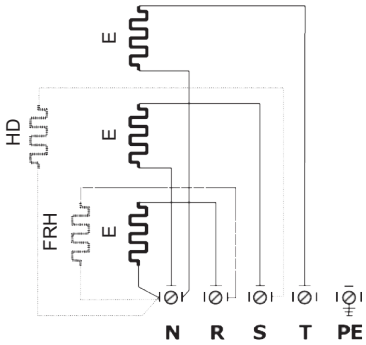

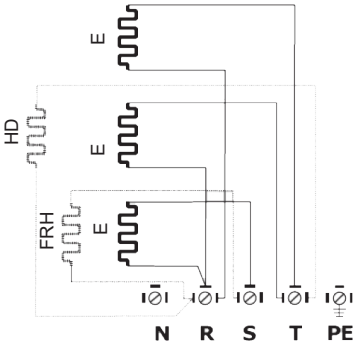

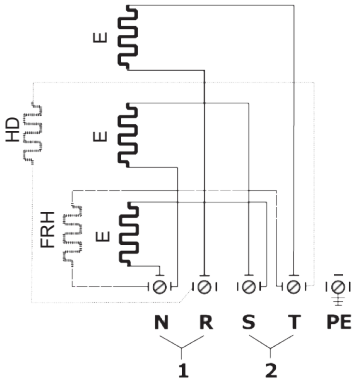

1~230 V 50-60 Hz

Terminal
x1 = max 40 A

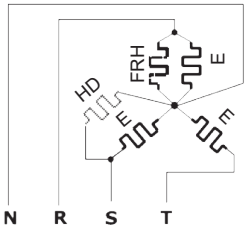

3~400 V 50-60 Hz
standard

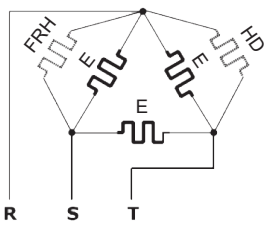

3~230 V 50-60 Hz

6.13 Defrost connections (SF35MC models - optional)

Ensure complete electrical isolation before performing any wiring.

SF35MC

n. of fans	coil type	Electric defrost (E)		Driptray heater (HD)		
		n.	W (x1)	n.	W (x1)	W tot
1	1	4	450	1	275	**2075**
	2	6	450	1	275	**2975**
2	1	4	800	1	480	**3680**
	2	6	800	1	480	**5280**
3	1	6	1150	1	720	**7620**
	2	6	1150	1	720	**7620**
4	1	6	1500	1	940	**9940**
	2	6	1500	1	940	**9940**

n. of fans	Fan shroud heater (FRH)		
	n.	W (x1)	W tot
1	1	165	**165**
2	2	165	**330**
3	3	165	**495**
4	4	165	**660**

In case FRH ware mounted, the total power consumption is the sum of each consumption.

SF35MC

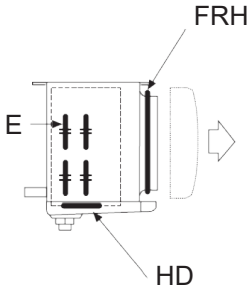

Terminal
x1 = max 40 A

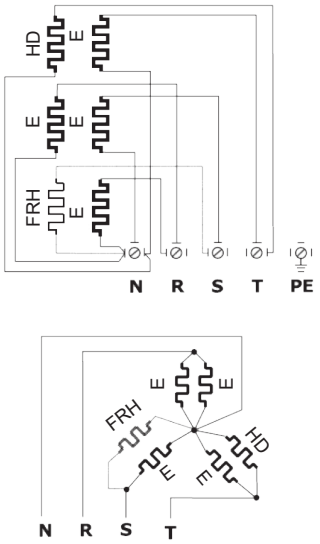

3~400 V 50-60 Hz
standard

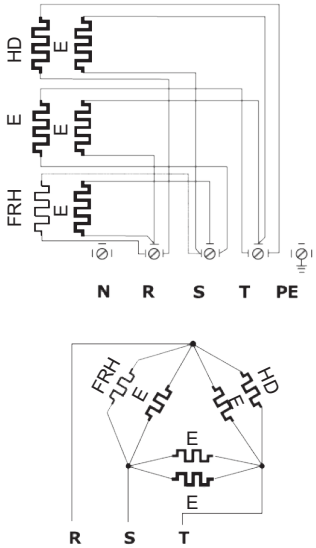

3~230 V 50-60 Hz

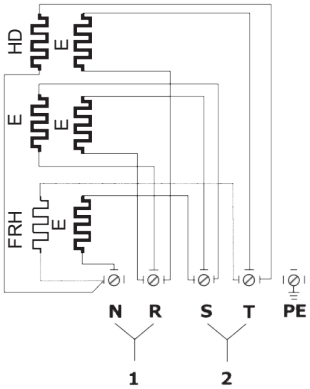

1~230 V 50-60 Hz

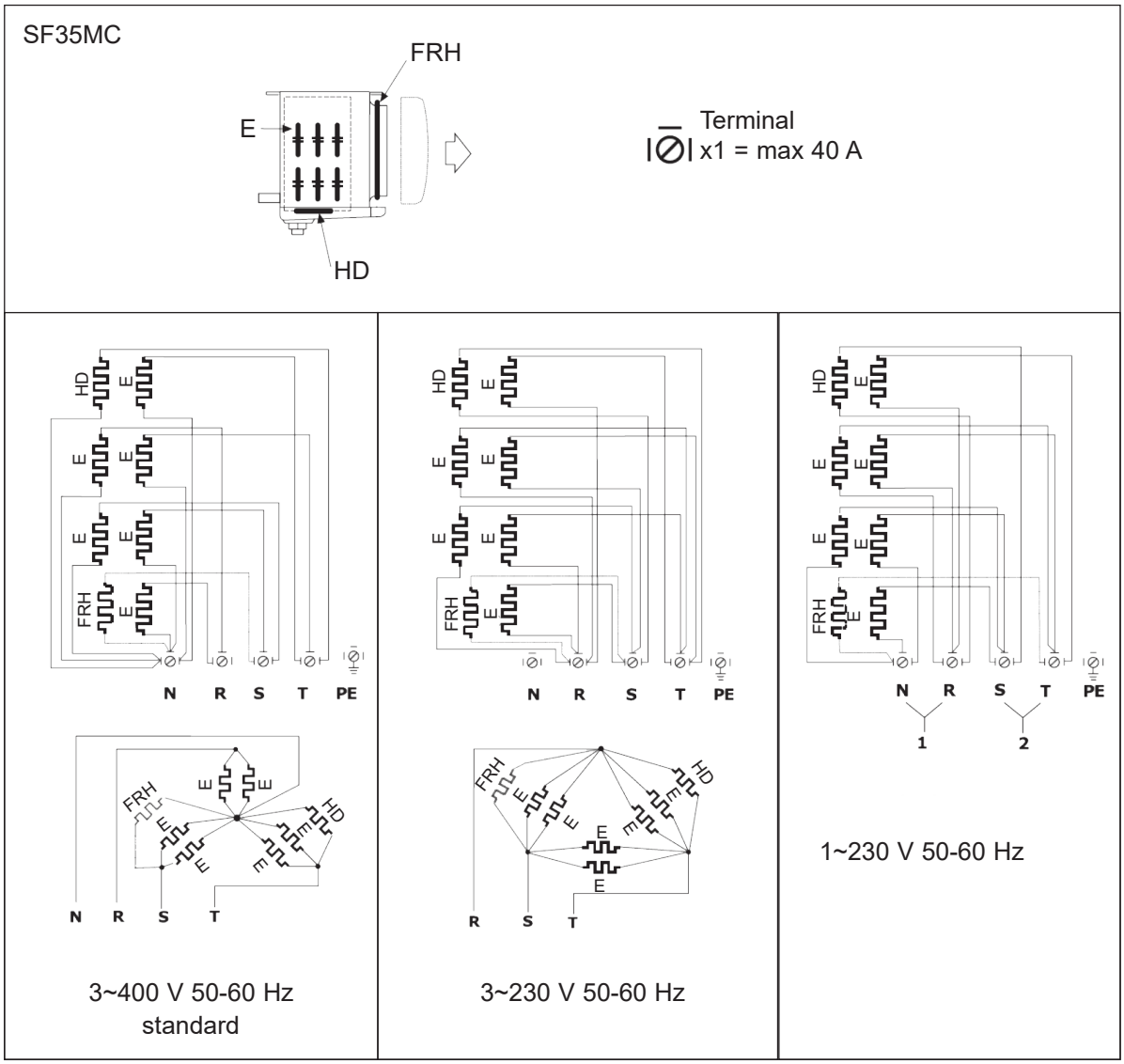

6.14 Insulated suction hood mounting

By default, insulated suction hood is supplied loose and shall be assembled before mounting the unit to the ceiling.

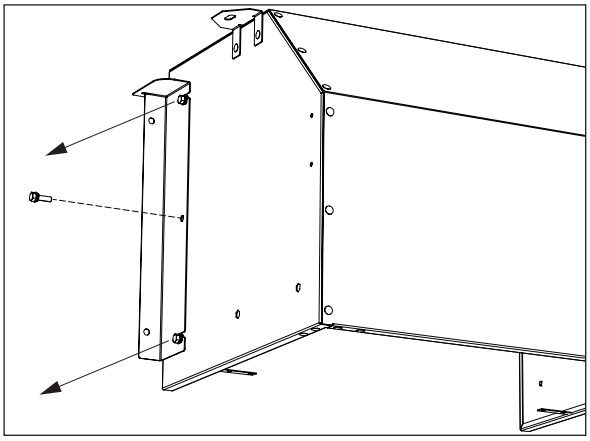

Support brackets are premounted on the suction hood sides (one per side).
Remove the bracket central screw. Loosen the upper and lower screws and slip off the brackets.

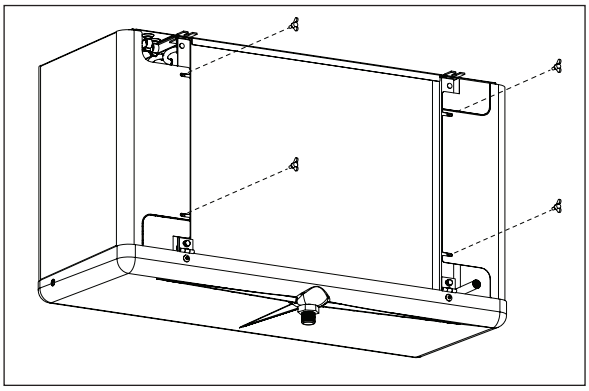

Unscrew the wing nuts from the coil side.

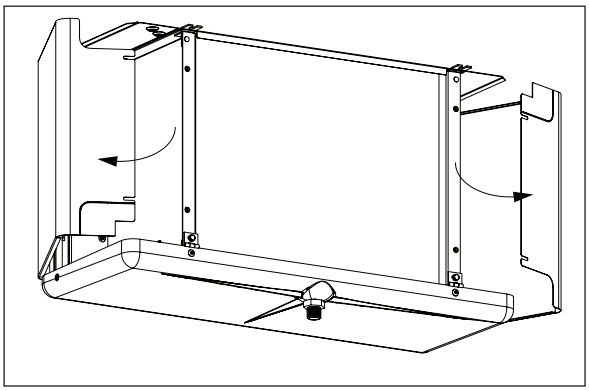

Open the side panels.

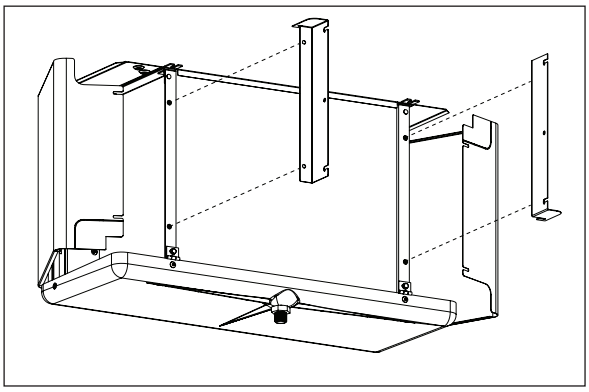

Place the support brackets.

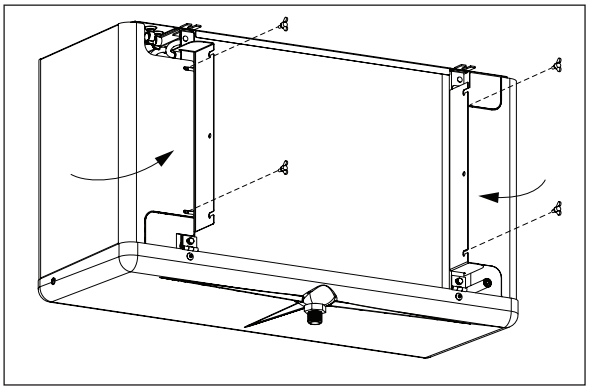

Close the side panels. Use the wing nuts to fix both side panels and the brackets to the coil.

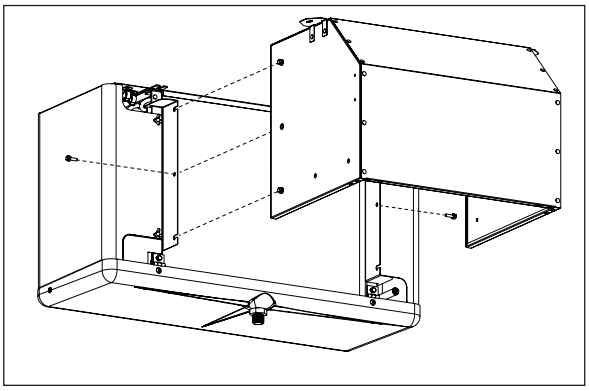

Slot the upper and lower screws into the sockets to place the suction hood. Tighten the screws.

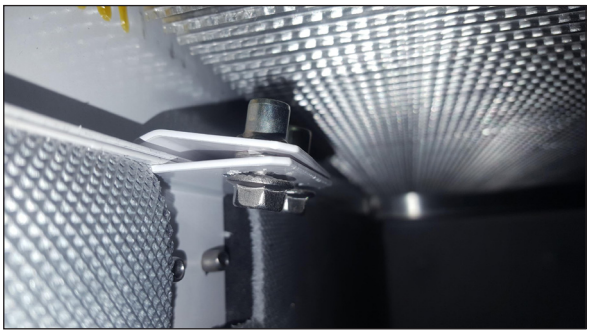

Hook the central clip to the air cooler casing.

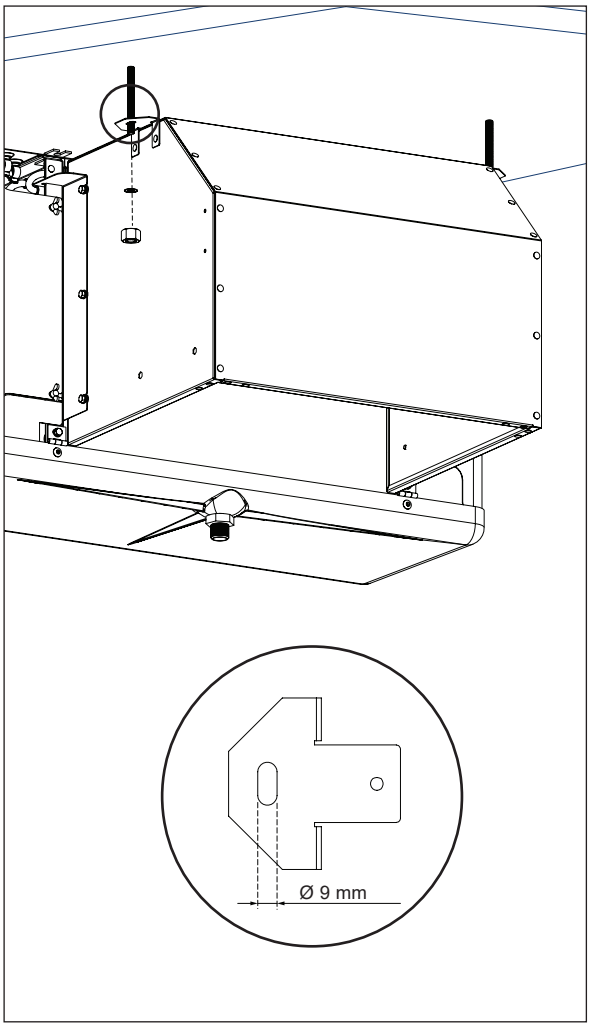

Mount the unit equipped with the suction hood to the ceiling. Fix the suction hood to the room ceiling by using suitable studs and securely tightening nuts and washers.

In 3-4 modules units, there are 3 fixing points.

Suction hood dimensions

side view

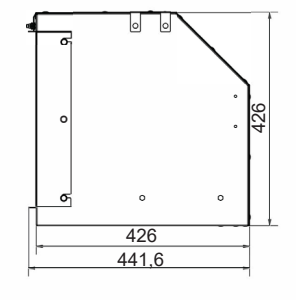

top view - 1 fan

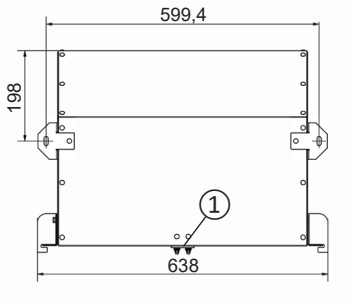

1 = central clip

top view - 2 fans

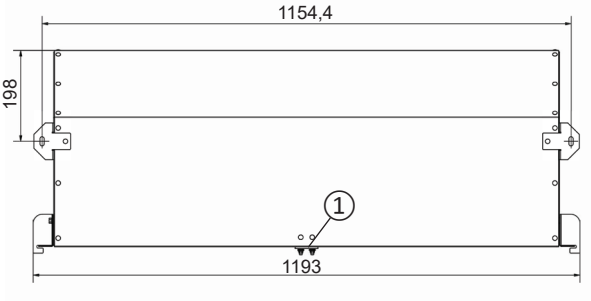

top view - 3 fans

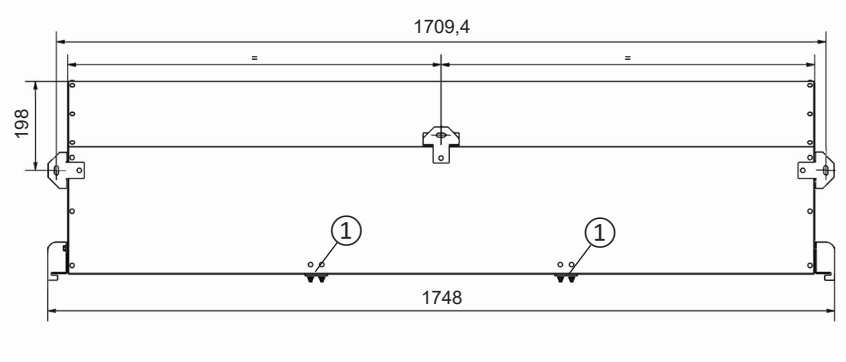

top view - 4 fans

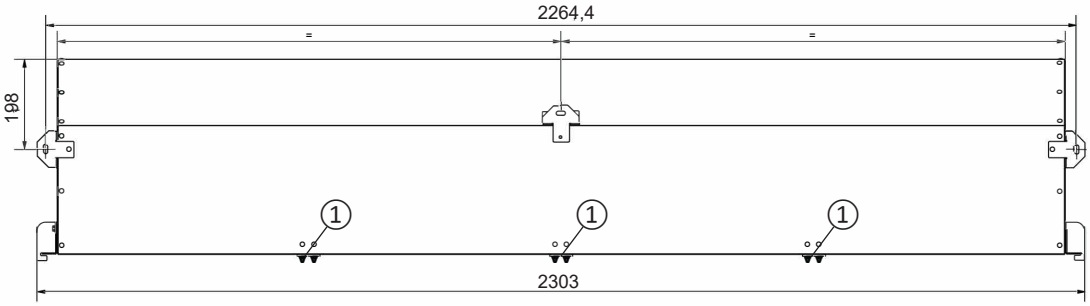

7 Maintenance

It is essential after delivery that adequate protection and inspection are carried out on the equipment. This is especially important if there is any delay in installing or commissioning the equipment. After commissioning and setting up the defrost systems, the heat exchanger will require maintenance. Regular checks and good maintenance will ensure trouble free operation. The frequency of checks will depend on site location and the specific operating conditions. Equipment installed in industrial or coastal areas, or in any kind of aggressive environment, generally requires more frequent inspections than the same equipment in rural, unpolluted areas. Damage can occur during site installation and during the period prior to commissioning. Inspections and remedial work should take place during this period. On sites where building work is in progress, it is strongly advised that finned block, headers and return bends are covered up to keep them clean and protected from damage until the time of commissioning.
Header and cooler tubes can be extremely cold! Take precautions when maintenance is carried out near the header and cooler tubes.
Ensure complete electrical isolation before performing any maintenance activity.

7.1 Shut down periods

Even during prolonged shut down periods, maintenance should be carried out. If the shut down period is extended, all electric motors should be run once every four weeks for a minimum of 4 hours. EC fans must be kept powered during shut down periods.

7.2 Moisture in the refrigeration system

Moisture in a refrigeration system is undesirable. Moisture can cause malfunctioning in the refrigeration operation. A lesser known problem is that small amounts of moisture in the refrigeration system can after a time cause leakage through the formation of frost clumps. These frost clumps are the result of moisture seeping from the refrigeration system during defrost, as water seeps into the soldering seams and then freezes, resulting in a volume increase. This process repeats itself during each freeze/defrost cycle, as a result of which the cavities (potholes) thus formed become steadily larger and ultimately burst, causing leakage.

7.3 Cleaning and disinfecting

A coil block should be kept clean to guarantee it works well. The user of the heat exchanger should ensure that the cleaning and disinfecting agents that are used do not have a corrosive effect on the materials used by Alfa LU-VE.

7.4 Casing

Casework checks should be carried out at least every 3 months. In doing so, inspect for any deterioration of coating and/or corrosion. If such flaws are noted, take immediately remedial action. Should any damage occur during installation, this should be repaired immediately to prevent further deterioration.

7.5 Coil and drip tray

The heat exchanger coil should be checked at least every 3 months, with close inspection being carried out for such things as leaks or chafing of tubes. In addition, any unusual vibration of the fans should be checked. The unit should be cleaned as instructed when necessary using low pressure compressed air, and/or low pressure water hose or a mild detergent wash. Care must be taken not to hose directly onto fan motors or electric control panels or the electrical connection boxes of the heaters. It should be noted that abnormal atmospheric conditions can greatly harm the lifetime of the finned coil.
Please ensure the drip tray is empty before it is disassembled. The weight of any leftover water could injure the operator if the drip tray fell open accidentally.

7.6 Electric defrost elements replacement

Before handling heater elements always:

- disconnect power supply
- ensure heaters are at ambient temperature.

To remove electric defrost elements (E), open the driptray and side covers on both sides.
Disconnect heater element from connection box.

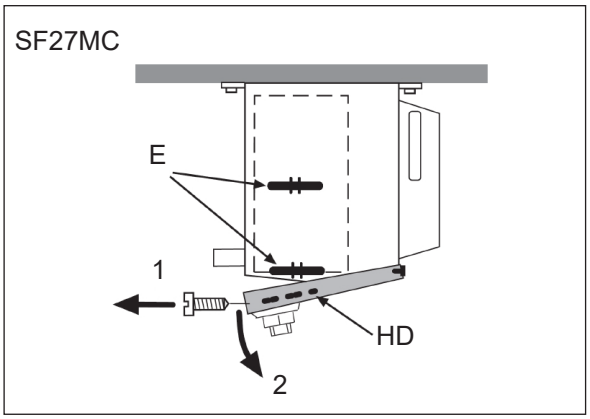

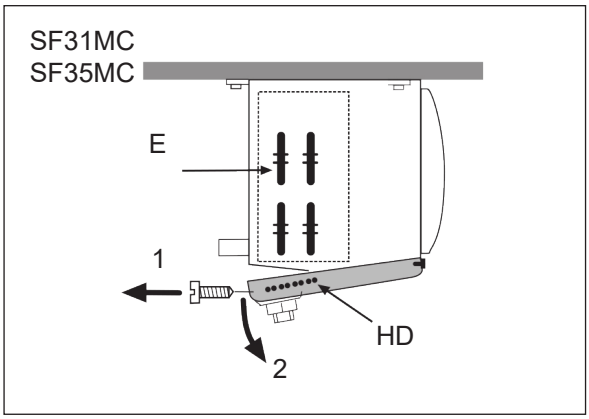

On the opposite cooler side, remove fixing clip (U) and extract element from coil.
Mount new element in reverse order and reassamble the fixing clip in the correct position (V).

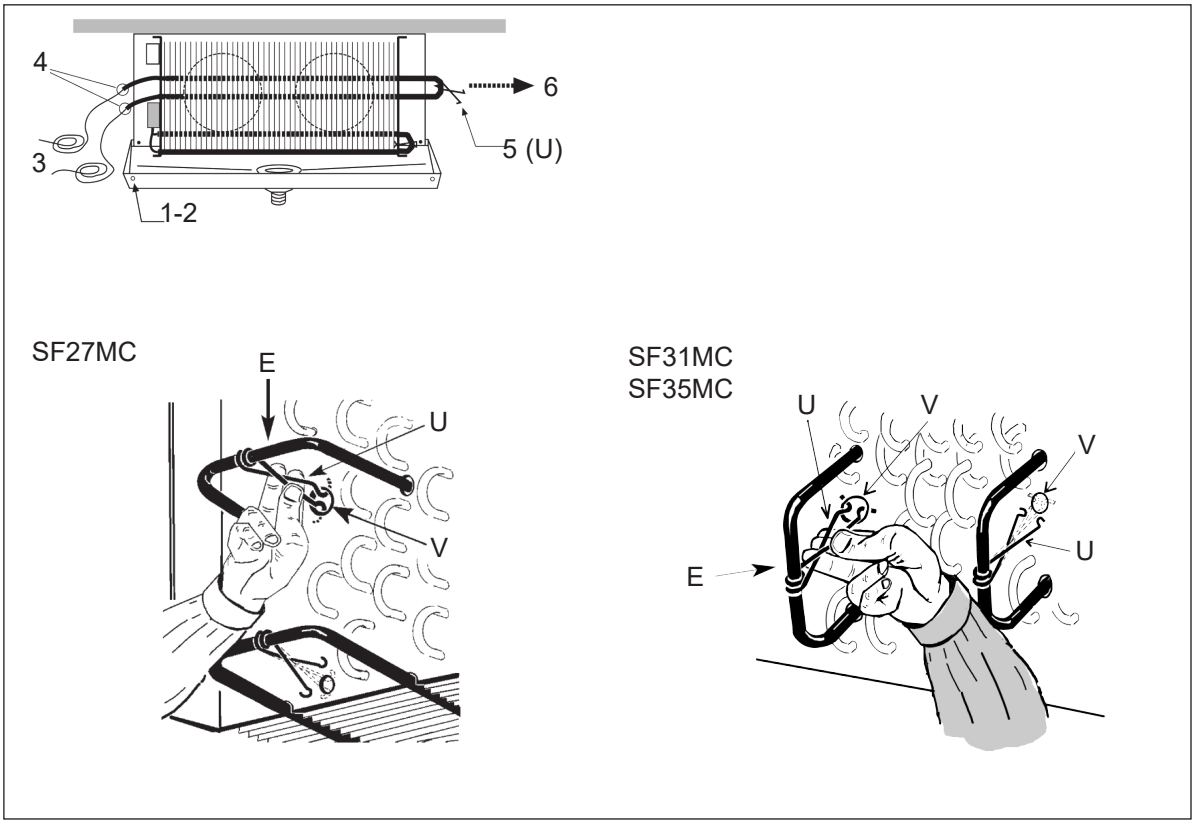

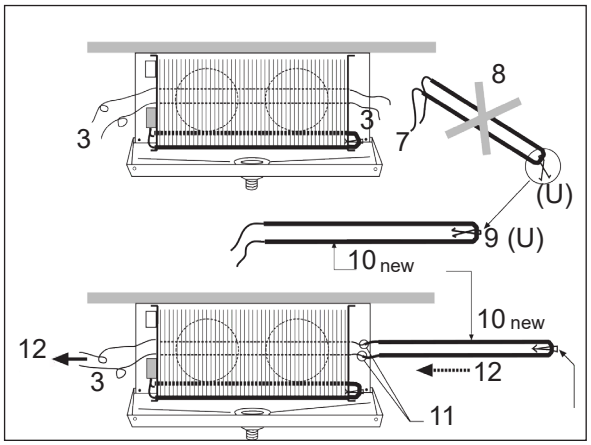

Restore electrical connections and close side covers and driptray.

7.7 Driptray heater elements replacement

Before handling heater elements always:

- disconnect power supply
- ensure heaters are at ambient temperature.

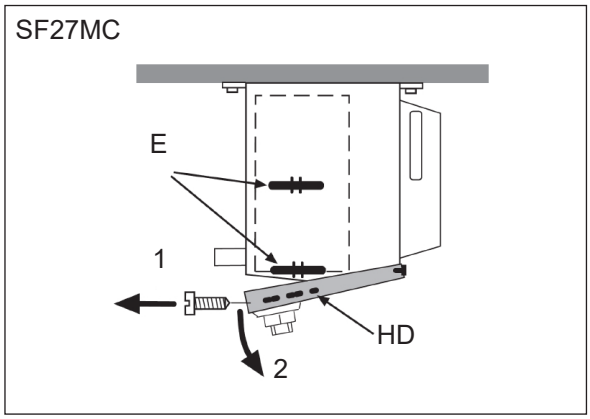

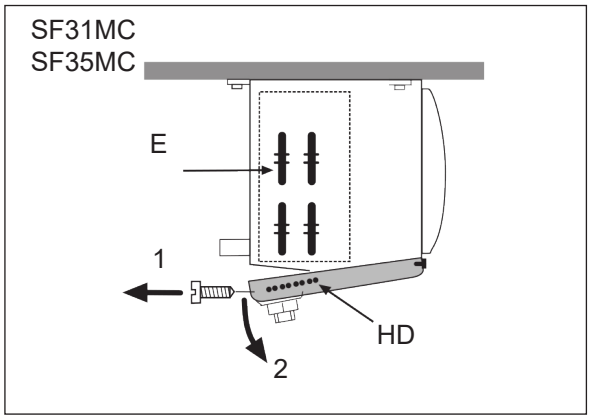

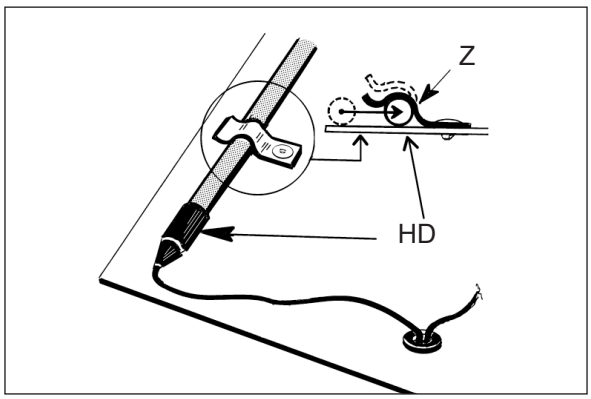

To remove driptray heater elements (HD), open the driptray.
Disconnect heater element and remove element from bottom plate while gently bending the fixing clips (Z).

Mount new element in reverse order.
Close drip tray and restore electrical connections.

7.8 Fans

Fans should be checked 3 months after commissioning and thereafter depending on operating conditions and as experience dictates, for any dirt build-up and/or unusual vibration, which could ultimately cause damage to the fan or to the heat exchanger itself. Ensure complete electrical isolation before removing fan guards. Fan blades should also be checked for any erosion or corrosion and remedial action taken as necessary. All dirt and other contamination should be removed to avoid imbalanced running of the fan and motor bearing overheating. The security of the fan fastenings and the integrity of the components should be checked integrally as part of the routine maintenance operation. Particular attention should be paid to the fastening screws and balance of the fan blades.

7.9 Fan replacement (SF27MC models)

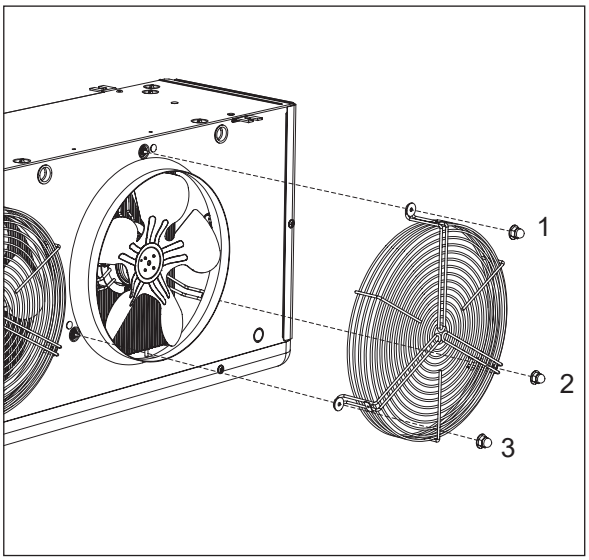

Unscrew the fixing screws and remove the fan grid.

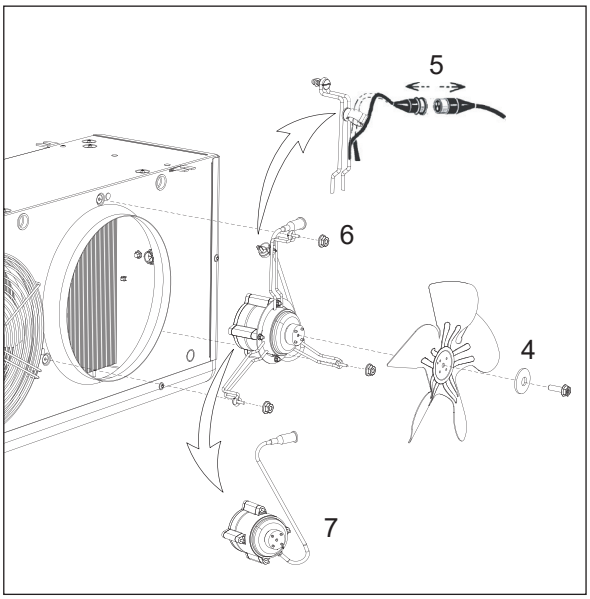

Unscrew fixing bolts and remove old fan.
Remove elctrical connections.
Mount new fan in identical position. Use an anti-corrosion compound when remounting the fixing bolts.
Restore electrical connections.
Remount the fan grid.

7.10 Fan replacement (SF31MC and SF35M models)

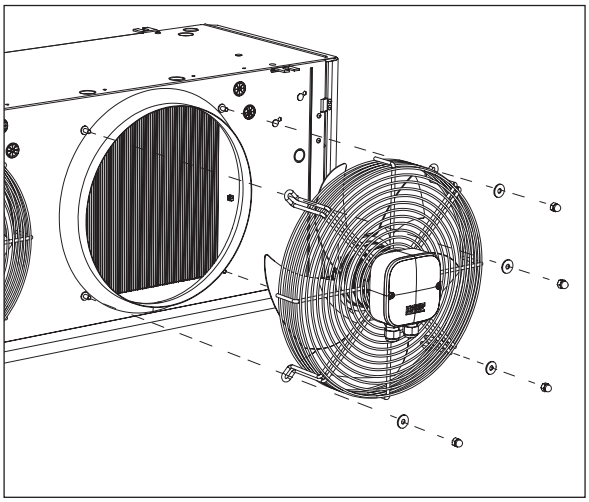

Unscrew fixing bolts and remove old fan. Mount new fan in identical position. Cable glands must be positioned downwards. Use an anti-corrosion compound when remounting the fixing bolts.

Restore electric connection when the new fan has been mounted.

7.11 Fan shroud heater (optional)

Unscrew the fixing screws and remove the fan grid.

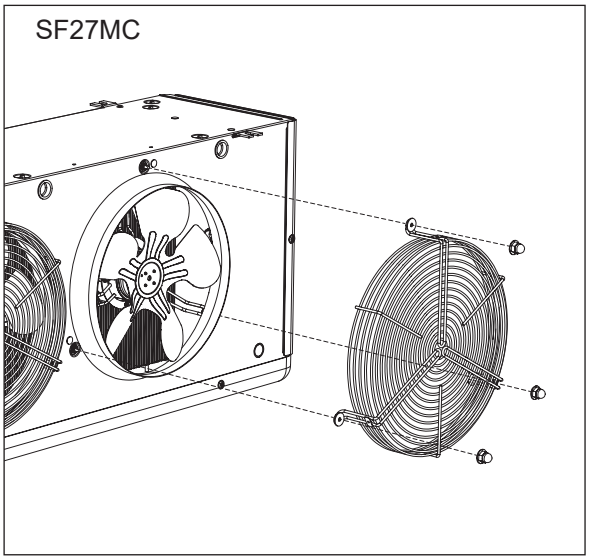

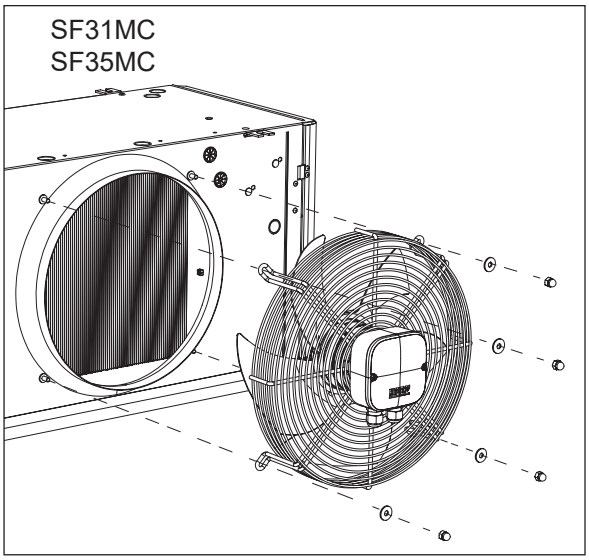

- Position the fan shroud heater around the fan cowl.
- Place the three brackets as shown and fix them with the self-tapping screws.
- Fasten the fan shroud heater with the spring.

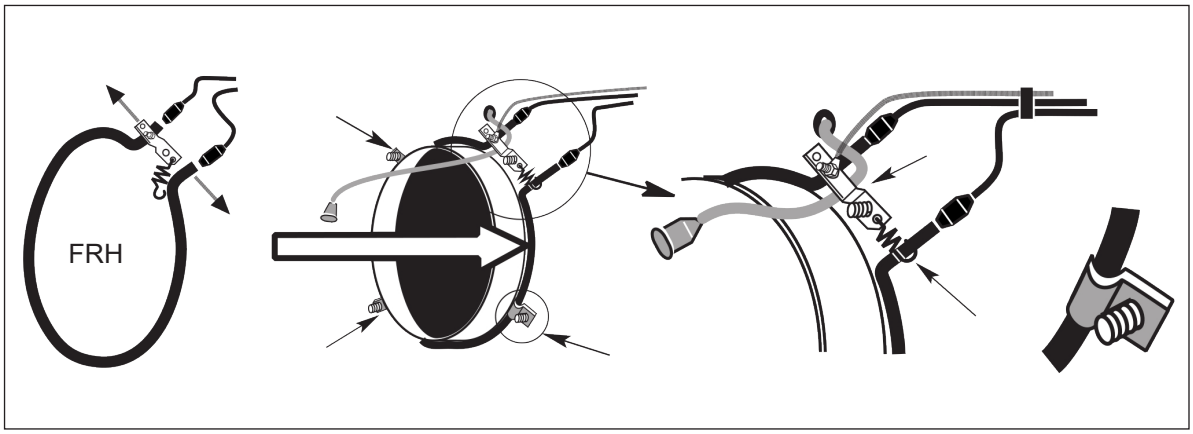

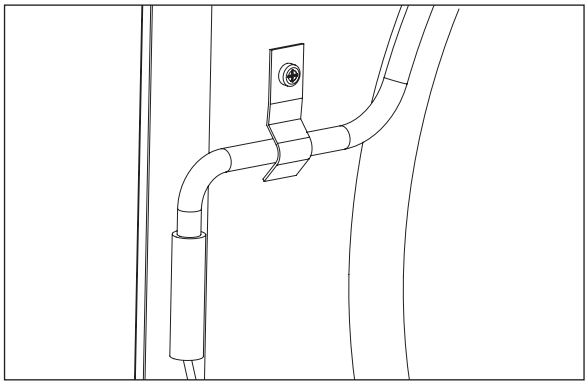

The bracket shall wrap the resistor without crushing it.

Remount the fan grid.

8 Residual risks

- **Sharp edges & corners**
  There is a substantial risk of injuries due to sharp edges and corners of coil and casing. Make sure to wear reliable protection during any handling of the unit and maintenance activities.
- **Drip tray**
  Ensure the drip tray is empty before lowering or disassembling. The weight of any leftover water or ice could injure the operator if the drip tray fell open accidentally.
- **Side plates**
  Removable side plates may only be opened by qualified staff. Ensure the side plates are properly secured after closing.
- **Fans**
  Rotating fans can cause injuries to fingers. Never operate fans without the mounted protection grid and take care of loose clothing. Switch power off before any maintenance.
- **Electrics**
  Power must be switched off before any work or maintenance on electrical parts of the unit. Secure the unit against unintentional switching on.
- **Burns or frostbite**
  (Distributor) tubes can be extremely cold, whereas defrost heater elements can get very hot. Use reliable protection.
- **Working fluids**
  Working fluids might be toxic and/or flammable. These substances may only be handled by qualified staff while taking all necessary precautions and following any applicable regulations.
- **Fan vibrations**
  Continuous fan vibrations can cause material failure and hence a risk of injury or damage due to loose parts. Therefore vibrations must be reduced to a minimum at all times.

9 Troubleshooting

Fault	Possible cause	Required action
Fan motor not functioning	No power supply	Check/restore power supply.
	No control signal (EC motors)	Check/restore control signal.
	Fan blade blocked	Remove obstruction.
	Fan motor burnt	- Check for fan blade obstructions. - Check thermal protection device. - Replace fan motor.
Excess motor noise	Defective fan motor bearing	Replace fan motor.
Excess vibrations	Loose fan fasteners	Tighten fasteners.
	Unbalanced fan blades	Replace fan blades.
Insufficient capacity	Heat exchanger coil dirty/blocked	Clean coil.
	Coil partly blocked by solid ice	- Check defrost cycle settings. - Check defrost heaters. - Perform 100% coil defrost to remove all ice.
	Fans not (properly) functioning	Check fans.
	Refrigerant supply/pressure insufficient	Restore refrigerant supply/pressure to reference values.
Refrigerant leakage	Refrigerant containing parts damaged	- Stop fans. - Close refrigerant supply. - Repair leak.

10 Spare parts

Contact your local Alfa LU-VE representative for spare parts order and assistance.

10.1 Spare parts (SF27MC models)

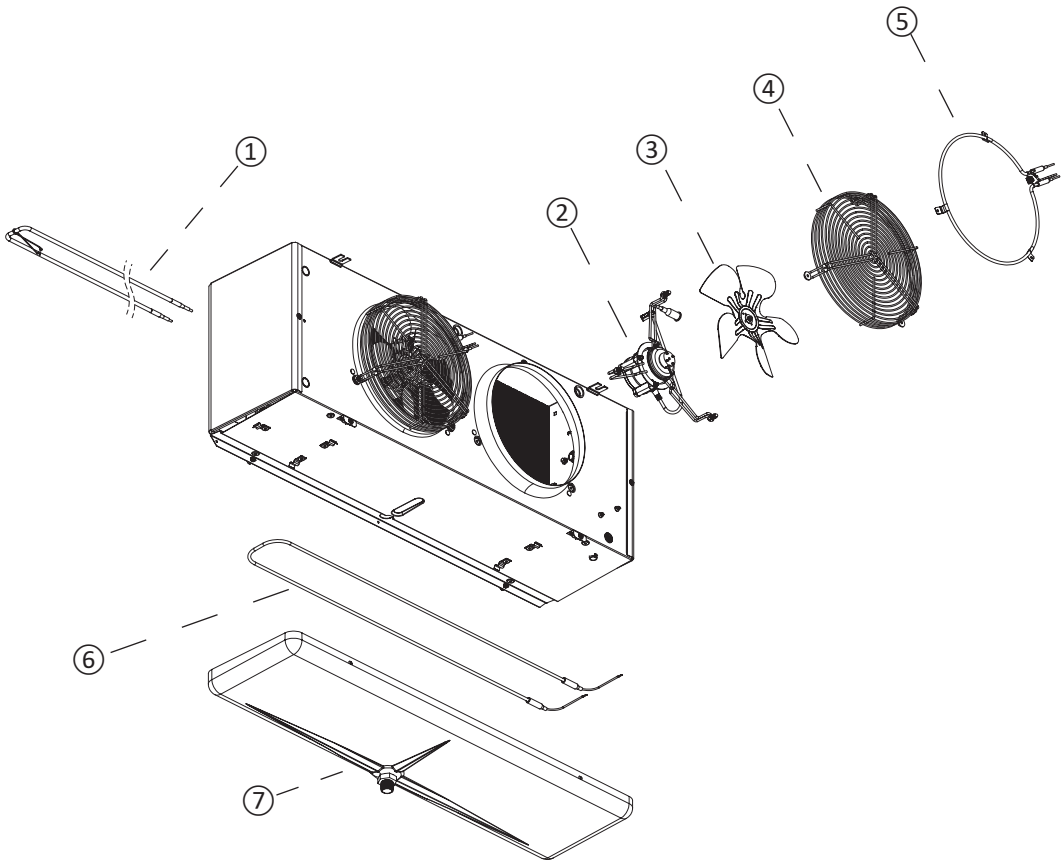

Spare parts Optigo SF27MC	
1	Electric defrost (E)
2	Fan motor
3	Impeller
4	Fan grid
5	Fan shroud heater (FRH)
6	Driptray heater (HD)
7	Driptray

10.2 Spare parts (SF31MC and SF35MC models)

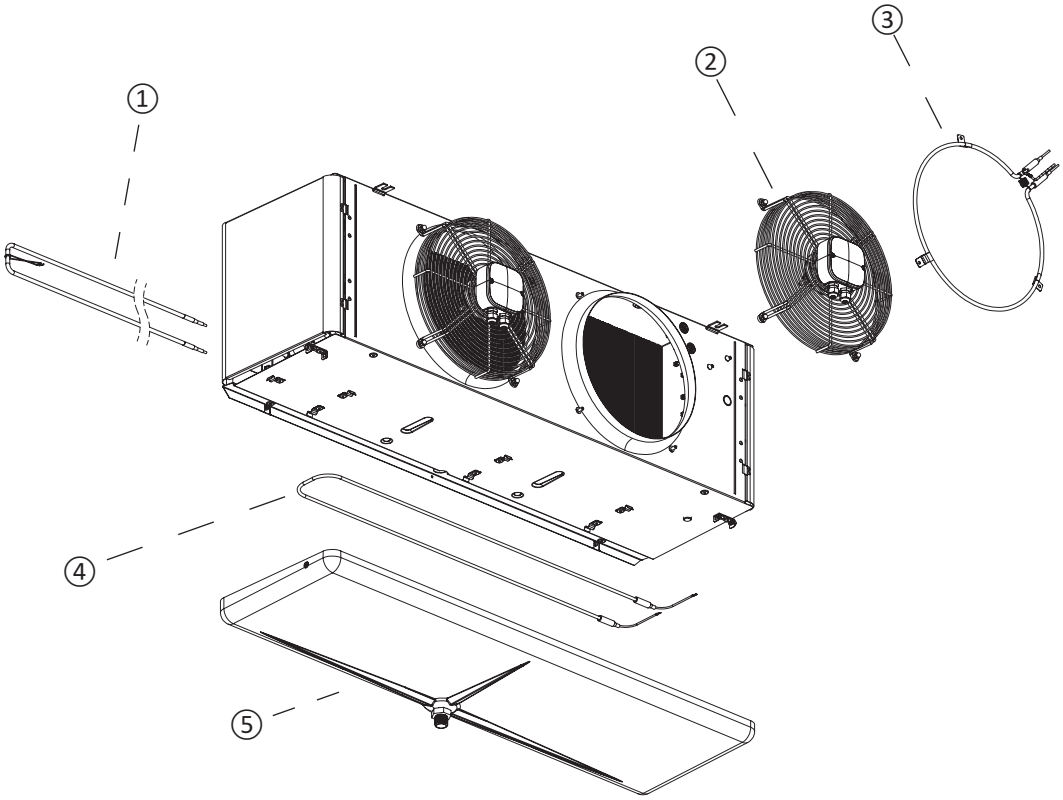

Spare parts Optigo SF31MC and SF35MC	
1	Electric defrost (E)
2	Fan motor
3	Fan shroud heater (FRH)
4	Driptray heater (HD)
5	Driptray

ALFA
LU-VE

alfa.luvegroup.com

LU-VE GROUP
leadership with passion