This document and its contents is owned by LU-VE Group or its affiliates and protected by laws governing intellectual property and thereto related rights. Without limiting any rights related to this document, no part of this document may be copied, reproduced or transmitted in any form or by any means (electronic, mechanical, photocopying, recording, or otherwise), or for any purpose, without the expressed permission of LU-VE Group. Nor may it be used in any other way or for any other purpose than expressly permitted by LU-VE Group. LU-VE Group will enforce its rights related to this document to the fullest extent of the law, including the seeking of criminal prosecution.

MACHINE FANS LAY-OUT
(TOP VIEW)

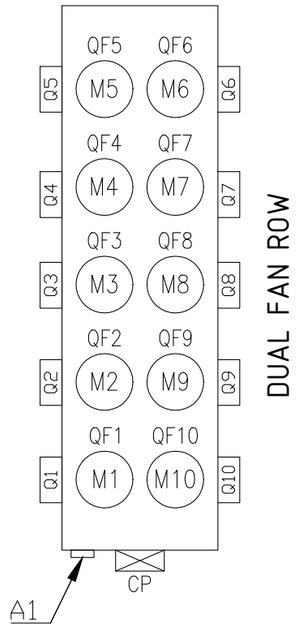

COLOURS TABLE			
USE	COLOUR	VOLTAGE	SIGLE
Power Circuit	Black	230÷400VAC	BK
Neutral	Blue	230VAC	BL
PE Circuit	Yellow/Green	-	GNYE
Auxiliary	Blue	24VDC	BU
Auxiliary	Red	24VAC	RD
Auxiliary	Brown	230VAC	BR
External Circuit	Orange	250V max	OR

QUADRO ELETTRICO
ECCB2 10T H

CONTROL PANEL
ECCB2 10T H

ATTENZIONE
Protezione generale della linea cura del cliente
Collegare a terra il PE
CAUTION!
Power line protections to be supplied by user
PE must be earthed

DESIGN	ELECTRAIMPIANTI		
SERIE	ECCB2		
EI JOB	P00045-000		
CUSTOMER	ELECTRAIMPIANTI		

VOLTAGE SUPPLY	400VAC ±10%	SHORT CIRCUIT CURRENT (Icc)	10kA
PHASE	3ph+PE	PROTECTION DEVICE	–
AUXILIARY VOLTAGE	–	IP DEGREE CLOSED DOOR	IP65
NOMINAL VOLTAGE	61A	IP DEGREE OPEN DOOR	Contatti Accidentali
NOMINAL CURRENT	50/60Hz	STANDARD	EN 61439-1 EN 60529
NOMINAL FREQUENCY	38kW	TEMPERATURE RANGE	min -20°C max +40°C
NOMINAL POWER			

REV.	MODIFICA	DATA	FIRME
00	First Issue	01/02/22	APR

CUSTOMER LOGO

LU-VE GROUP

SOST. DA
SOST. IL
FILE : EI000962.dwg

Quadro Elettrico
ECCB2 10 Fans
Control Panel
ECCB2 10 Fans

DRAW.
EI000962

REV.	MODIFICATION	DATE	DRAW	CHECK	APPR.
00	First Issue	01/02/2022	APR	PEL	FW

ELECTRAIMPIANTI
ELECTRAIMPIANTI Srl
Via Adone Perin, 1 36073 - Cornedo Vic. - VI
tel. +39 0445 490445 - Fax +39 0445 490456
E-mail: info@electraimpianti.it

Draw. N.:	EI000962	Plant	Control Panel ECCB2 10T H
CAD:	SPAC		
File Name:	EI000962.dwg		Cover *Cover*
Customer:	ELECTRAIMPIANTI		

Doc.N° 31419441
Job/Series: P00045-000
FG. 01
F.S. 02

Fg/Sh	Descrizione	Description	Modifica/Modify	Data/Date	N.	Firma/Signature
1	Cover	Cover	First Issue	01/02/2022	00	APR
2	Legenda Fogli	Sheets Legend	First Issue	01/02/2022	00	APR
3	Distinta Materiali	Bill of Materials	First Issue	01/02/2022	00	APR
5	Layout	Layout	First Issue	01/02/2022	00	APR
6	Layout	Layout	First Issue	01/02/2022	00	APR
10	Circuito Potenza	Power Circuit	First Issue	01/02/2022	00	APR
11	Circuito Potenza	Power Circuit	First Issue	01/02/2022	00	APR
12	Circuito Potenza	Power Circuit	First Issue	01/02/2022	00	APR
20	Controllore	Controller	First Issue	01/02/2022	00	APR
21	Controllore	Controller	First Issue	01/02/2022	00	APR
22	Allarmi Ventilatori	Fans Alarms	First Issue	01/02/2022	00	APR
23	Connessione Ventilatori	Fans Connections	First Issue	01/02/2022	00	APR
24	Connessione Ventilatori	Fans Connections	First Issue	01/02/2022	00	APR
25	Connessione Ventilatori	Fans Connections	First Issue	01/02/2022	00	APR
30	Morsettiera	Terminal	First Issue	01/02/2022	00	APR
31	Morsettiera	Terminal	First Issue	01/02/2022	00	APR
32	Morsettiera	Terminal	First Issue	01/02/2022	00	APR

REV.	MODIFICATION	DATE	DRAW	CHECK	APPR.
00	First Issue	01/02/2022	APR	PEL	FW

ELECTRAIMPIANTI
ELECTRAIMPIANTI Srl
Via Adone Perin, 1 36073 - Cornedo Vic. - VI
tel. +39 0445 490445 - Fax +39 0445 490456
E-mail: info@electraimpianti.it

Draw. N.: EI000962
CAD: SPAC
File Name: EI000962.dwg
Customer: ELECTRAIMPIANTI

Plant: Control Panel ECCB2 10T H

Legenda Fogli
Sheets Legend

Doc.N°: 31419441
Job/Series: P00045-000
FG. 02
F.S. 03

Nome/Item	Codice Interno	Descrizione IT	Descrizione EN	Fg/Sh	Q.ta/Q.ty
QF1	716475	FAZ-C10/3 Int.Magnetotermico 10kA 3P C10	Over current switch, 10A, 3p, C-Char, AC	10	1
QF2	716475	FAZ-C10/3 Int.Magnetotermico 10kA 3P C10	Over current switch, 10A, 3p, C-Char, AC	10	1
QF3	716475	FAZ-C10/3 Int.Magnetotermico 10kA 3P C10	Over current switch, 10A, 3p, C-Char, AC	10	1
QF4	716475	FAZ-C10/3 Int.Magnetotermico 10kA 3P C10	Over current switch, 10A, 3p, C-Char, AC	10	1
QF5	716475	FAZ-C10/3 Int.Magnetotermico 10kA 3P C10	Over current switch, 10A, 3p, C-Char, AC	11	1
QF6	716475	FAZ-C10/3 Int.Magnetotermico 10kA 3P C10	Over current switch, 10A, 3p, C-Char, AC	11	1
QF7	716475	FAZ-C10/3 Int.Magnetotermico 10kA 3P C10	Over current switch, 10A, 3p, C-Char, AC	11	1
QF8	716475	FAZ-C10/3 Int.Magnetotermico 10kA 3P C10	Over current switch, 10A, 3p, C-Char, AC	11	1
QF9	716475	FAZ-C10/3 Int.Magnetotermico 10kA 3P C10	Over current switch, 10A, 3p, C-Char, AC	12	1
QF10	716475	FAZ-C10/3 Int.Magnetotermico 10kA 3P C10	Over current switch, 10A, 3p, C-Char, AC	12	1
QS1	720053	OT63F3 Sezionatore 63A	OT63F3 Isolating Switch 63A	10	1
QU1	963822507	Portafusibile 2P CH10	Fuse carrier 2P CH10	20	1

REV.	MODIFICATION	DATE	DRAW	CHECK	APPR.
00	First Issue	01/02/2022	APR	PEL	FW

ELECTRAIMPIANTI
ELECTRAIMPIANTI Srl
Via Adone Perin, 1 36073 - Cornedo Vic. - VI
tel. +39 0445 490445 - Fax +39 0445 490456
E-mail: info@electraimpianti.it

Draw. N.: EI000962
CAD: SPAC
File Name: EI000962.dwg
Customer: ELECTRAIMPIANTI

Plant: Control Panel ECCB2 10T H

Distinta Materiali
Bill of Materials

Doc.N°: 31419441

Job/Series: P00045-000

FG. 03
F.S. 05

Vista Posteriore

Rear View

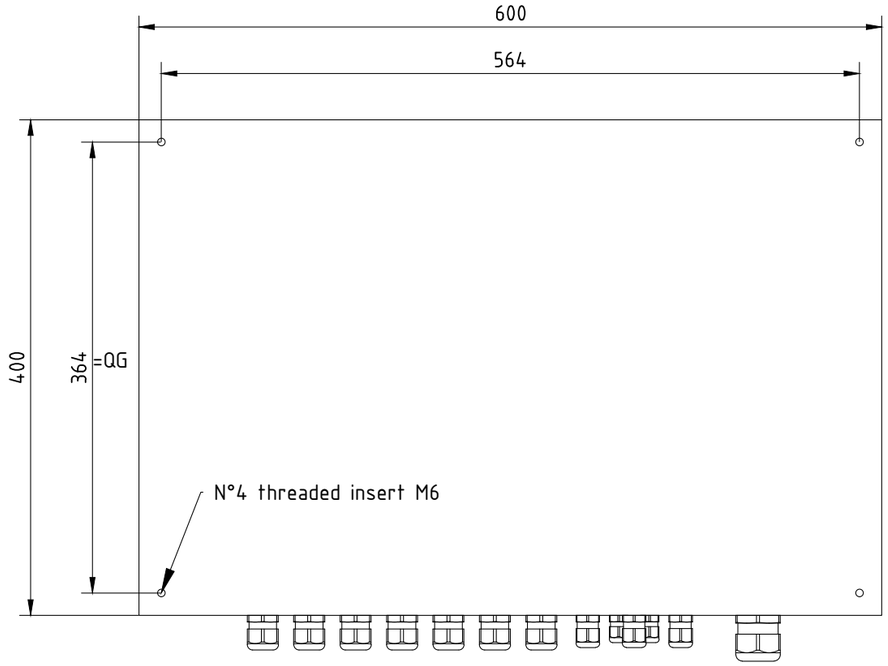

Vista Frontale

Front View

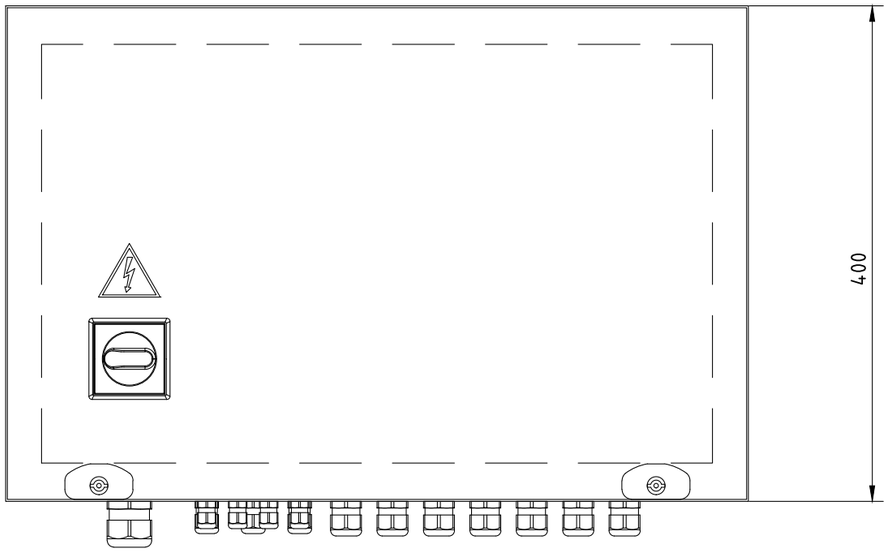

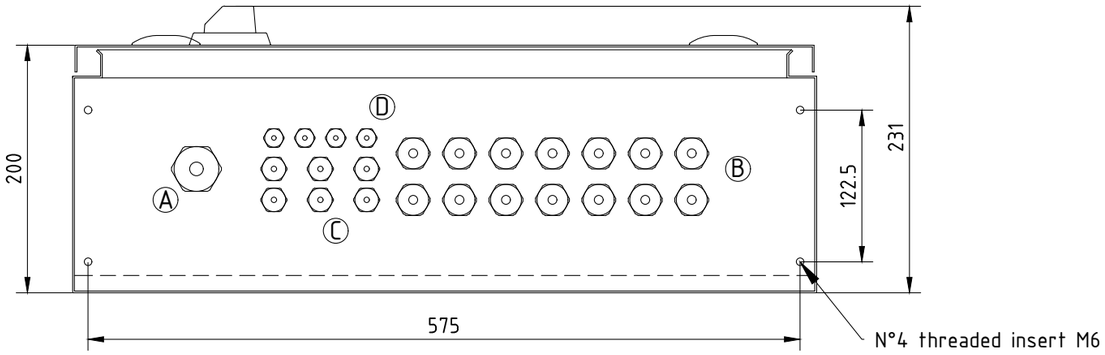

Vista dal Basso

Bottom View

Pressacavi / *Cable Gland*				
	ITEM	SIZE	Q.TY	TYPE
Alimentazione *Power Supply*	A	M32x1,5	1	Plastic
Alim. Ventilatori *Fans Supply*	B	M20x1,5	14	Plastic
Ausiliari *Auxiliary*	C	M16x1,.5	6	Plastic
	D	M12x1,5	4	Plastic

Enclosure Material	Sheet steel
Dimensions (HxLxD)	400x600x200
Painting	RAL7035
External IP degree	IP65
Internal IP degree	Accidental Contacts
Mounting	-
Sheet Metal Thickness	-

REV.	MODIFICATION	DATE	DRAW	CHECK	APPR.
00	First Issue	01/02/2022	APR	PEL	FW

ELECTRAIMPIANTI
ELECTRAIMPIANTI Srl
Via Adone Perin, 1 36073 - Cornedo Vic. - VI
tel. +39 0445 490445 - Fax +39 0445 490456
E-mail: info@electraimpianti.it

Draw. N.:	EI000962
CAD:	SPAC
File Name:	EI000962.dwg
Customer:	ELECTRAIMPIANTI

Plant: Control Panel ECCB2 10T H

Layout
Layout

Doc.N° 31419441

Job/Series: P00045-000

FG. 05

F.S. 06

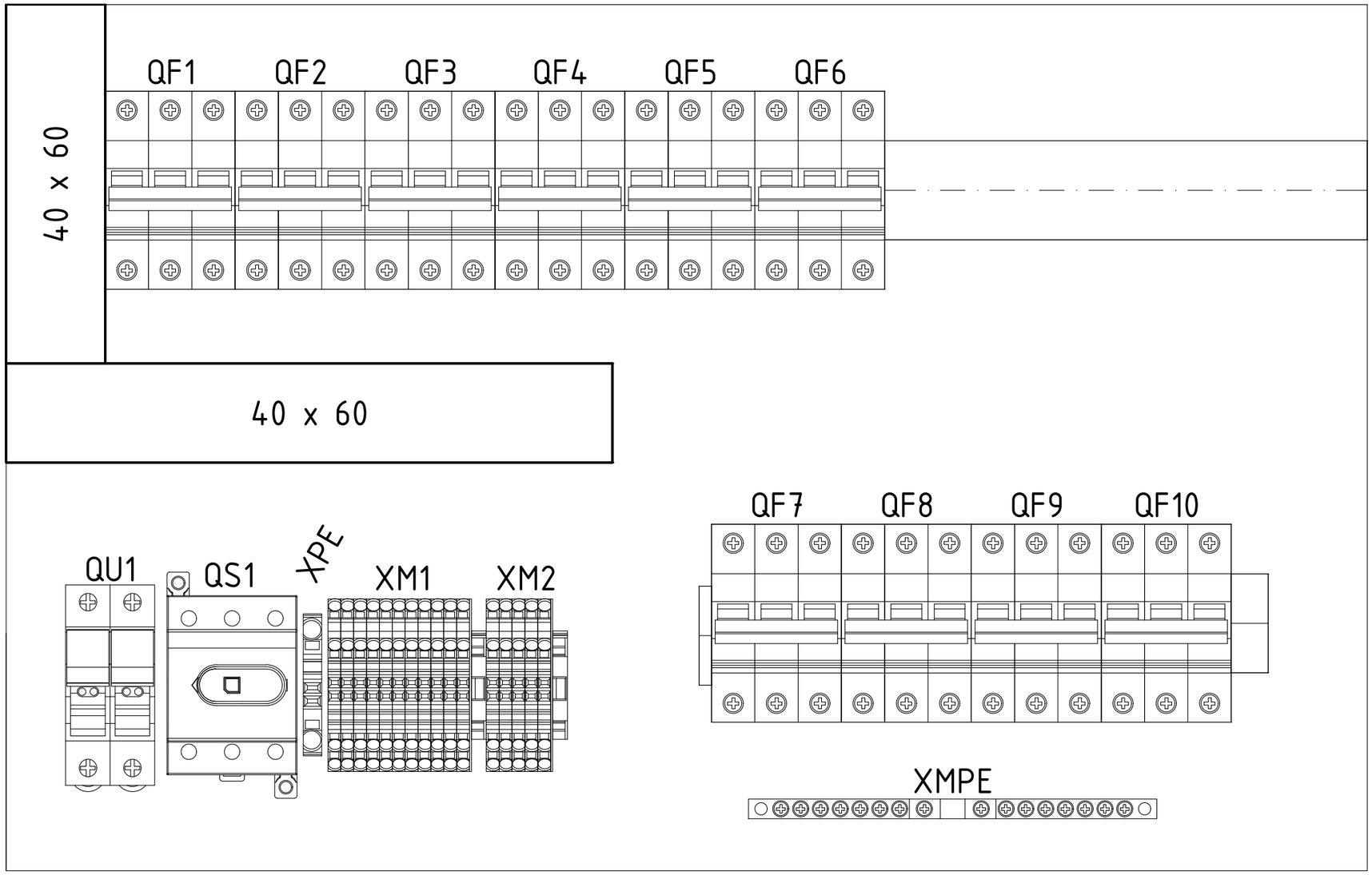

PLATE 350 x 550

REV.	MODIFICATION	DATE	DRAW	CHECK	APPR.
00	First Issue	01/02/2022	APR	PEL	FW

ELECTRAIMPIANTI
ELECTRAIMPIANTI Srl
Via Adone Perin, 1 36073 - Cornedo Vic. - VI
tel. +39 0445 490445 - Fax +39 0445 490456
E-mail: info@electrainpianti.it

Draw. N.:	EI000962
CAD:	SPAC
File Name:	EI000962.dwg
Customer:	ELECTRAIMPIANTI

Plant: Control Panel ECCB2 10T H

Layout
Layout

Doc.N°: 31419441

Job/Series: P00045-000

FG. 06

F.S. 10

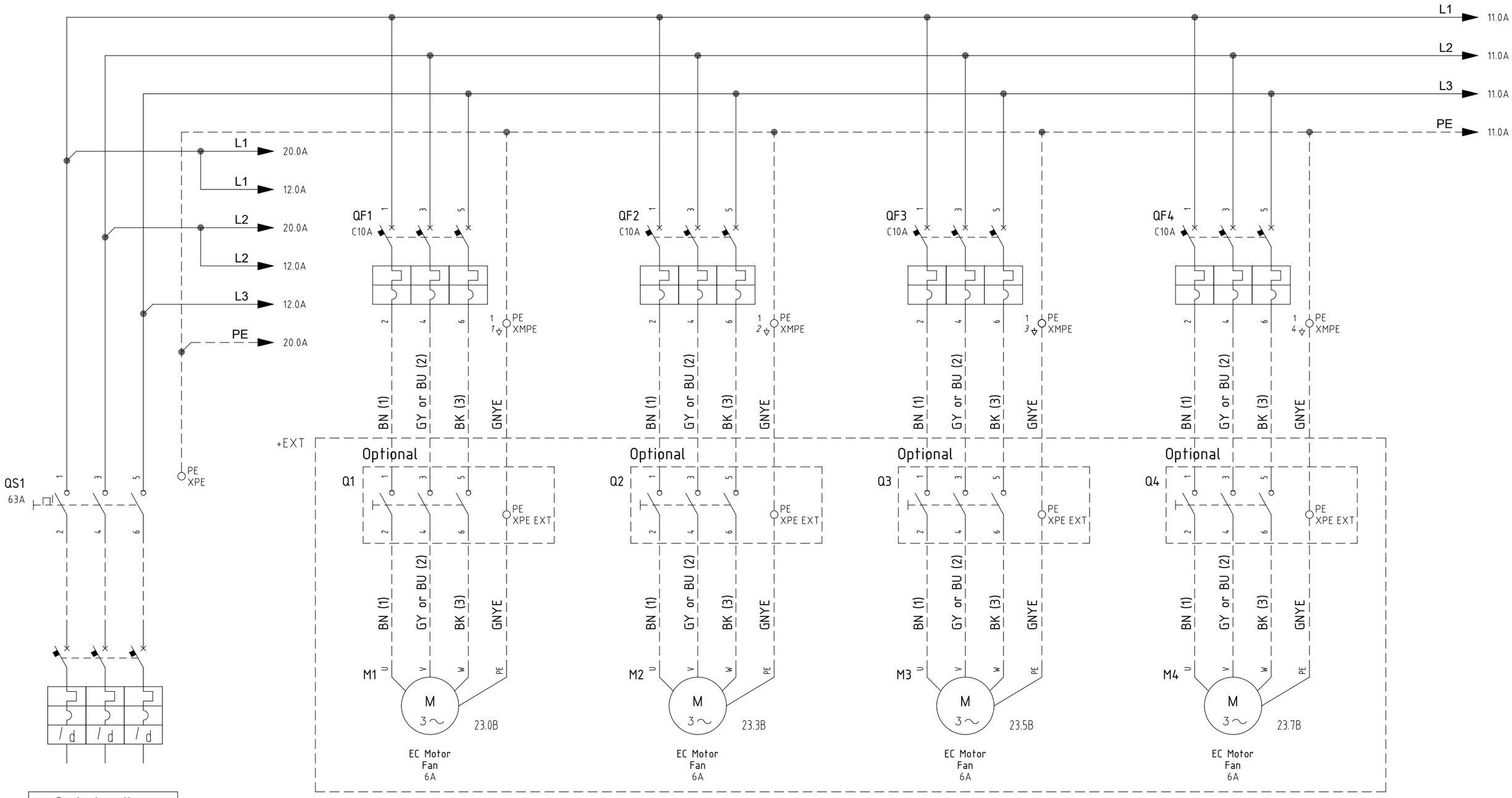

Protezione linea
a cura cliente
Line protection
by customer

Nota 1: Interruttori A Valle
Dei Motori Sono Opzionali

Note 1: Switches Downstream
Of The Motors Are Optional

Nota 2: Configurazione
Alternativa del Cavo tra Parentesi

Note 2: Cable Alternative
Configuration in Brackets

REV.	MODIFICATION	DATE	DRAW	CHECK	APPR.
00	First Issue	01/02/2022	APR	PEL	FW

ELECTRAIMPIANTI
ELECTRAIMPIANTI Srl
Via Adone Perin, 1 36073 - Cornedo Vic. - VI
tel. +39 0445 490445 - Fax +39 0445 490456
E-mail: info@electraimpianti.it

Draw. N.:	EI000962
CAD:	SPAC
File Name:	EI000962.dwg
Customer:	ELECTRAIMPIANTI

Plant: Control Panel ECCB2 10T H

Circuito Potenza
Power Circuit

Doc.N°: 31419441

Job/Series: P00045-000

FG. 10

F.S. 11

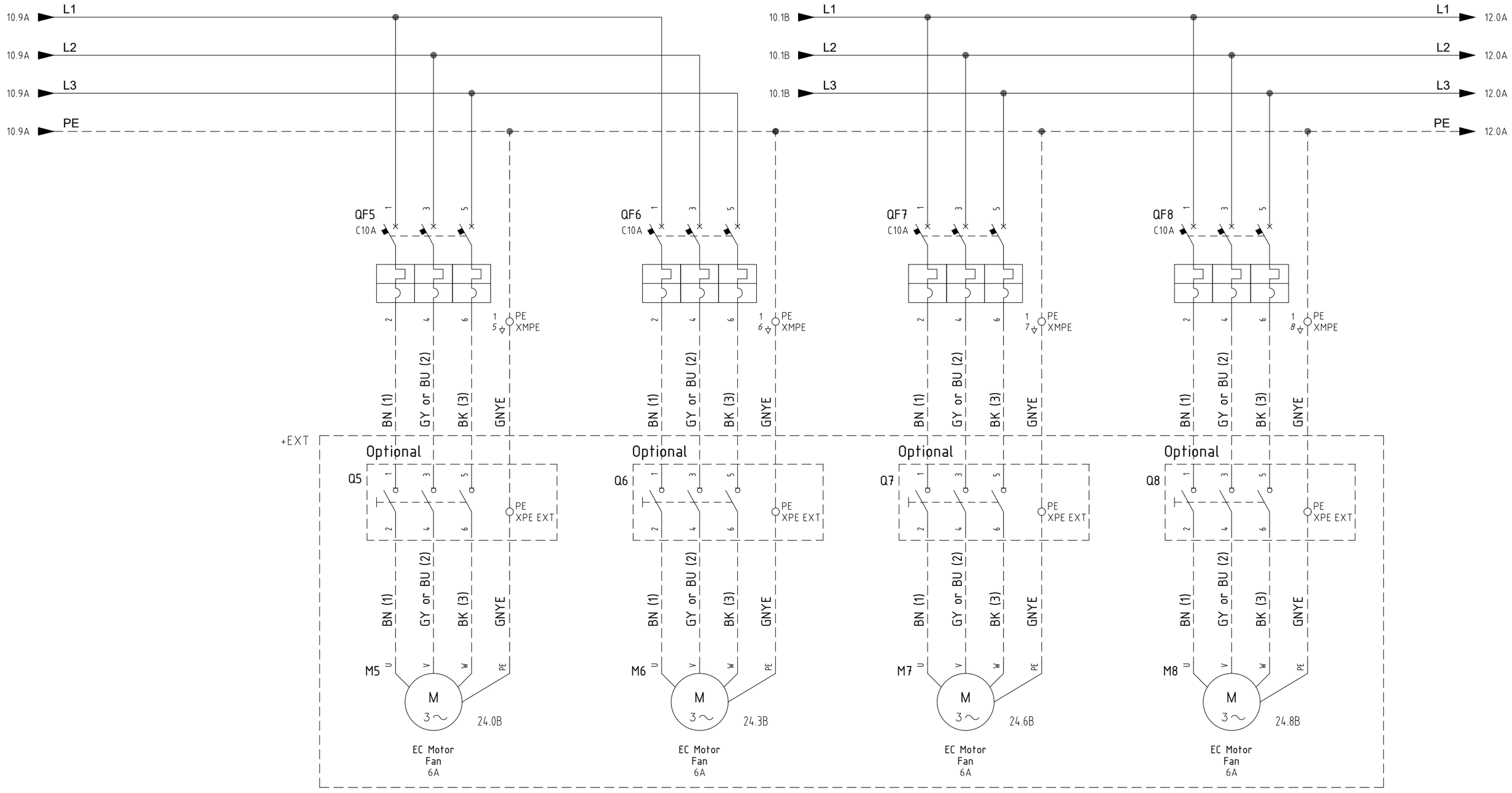

Nota 1: Interruttori A Valle Dei Motori Sono Opzionali

Note 1: Switches Downstream Of The Motors Are Optional

Nota 2: Configurazione Alternativa del Cavo tra Parentesi

Note 2: Cable Alternative Configuration in Brackets

REV.	MODIFICATION	DATE	DRAW	CHECK	APPR.
00	First Issue	01/02/2022	APR	PEL	FW

ELECTRAIMPIANTI
ELECTRAIMPIANTI Srl
Via Adone Perin, 1 36073 - Cornedo Vic. - VI
tel. +39 0445 490445 - Fax +39 0445 490456
E-mail: info@electraimpianti.it

Draw. N.:	EI000962
CAD:	SPAC
File Name:	EI000962.dwg
Customer:	ELECTRAIMPIANTI

Plant: Control Panel ECCB2 10T H

Circuito Potenza
Power Circuit

Doc.N° 31419441

Job/Series: P00045-000

FG. 11

F.S. 12

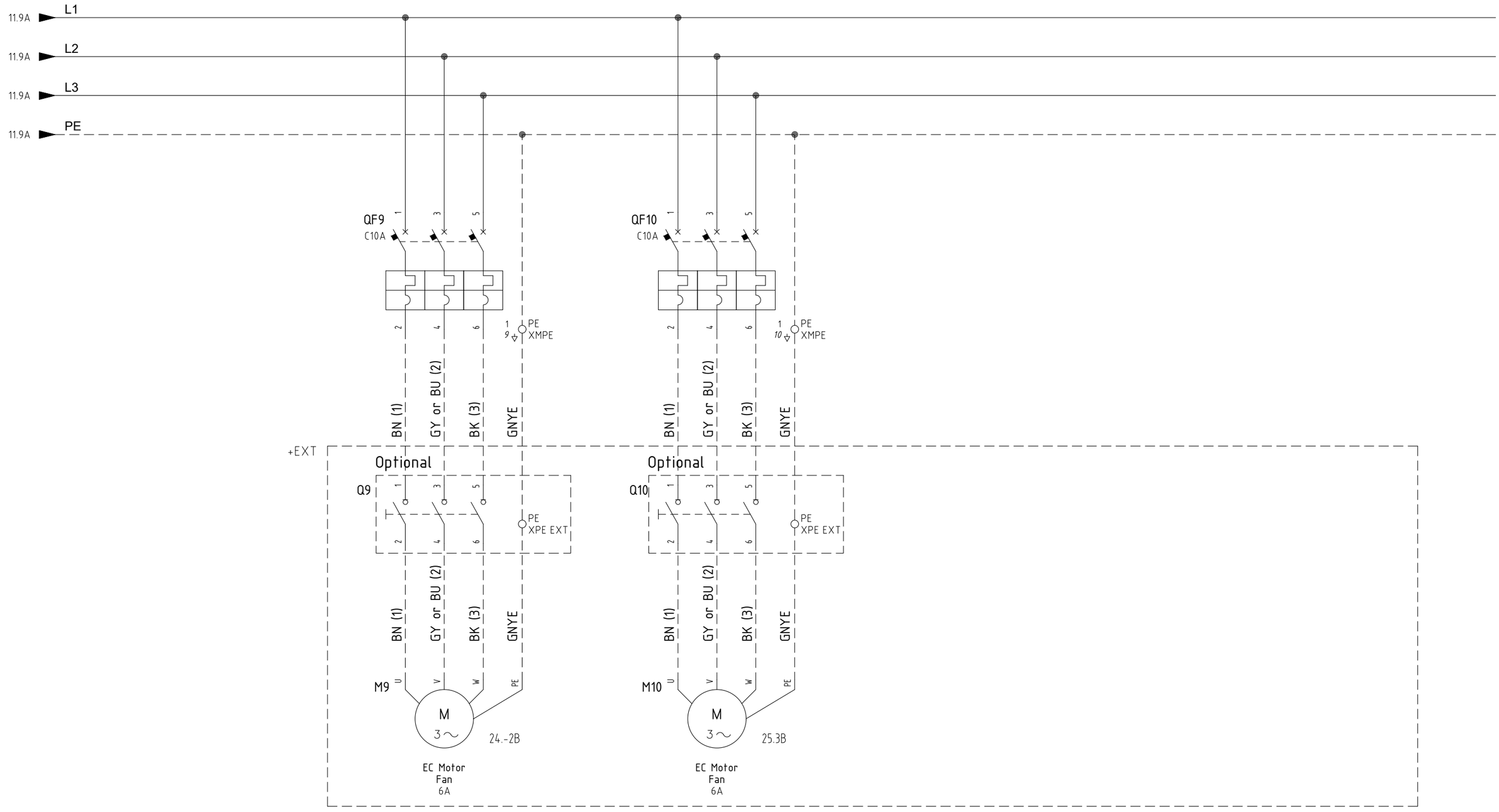

Nota 1: Interruttori A Valle Dei Motori Sono Opzionali

Note 1: Switches Downstream Of The Motors Are Optional

Nota 2: Configurazione Alternativa del Cavo tra Parentesi

Note 2: Cable Alternative Configuration in Brackets

REV.	MODIFICATION	DATE	DRAW	CHECK	APPR.
00	First Issue	01/02/2022	APR	PEL	FW

ELECTRAIMPIANTI
ELECTRAIMPIANTI Srl
Via Adone Perin, 1 36073 - Cornedo Vic. - VI
tel. +39 0445 490445 - Fax +39 0445 490456
E-mail: info@electraimpianti.it

Draw. N.:	EI000962
CAD:	SPAC
File Name:	EI000962.dwg
Customer:	ELECTRAIMPIANTI

Plant: Control Panel ECCB2 10T H

Circuito Potenza
Power Circuit

Doc.N° 31419441

Job/Series: P00045-000

FG. 12

F.S. 20

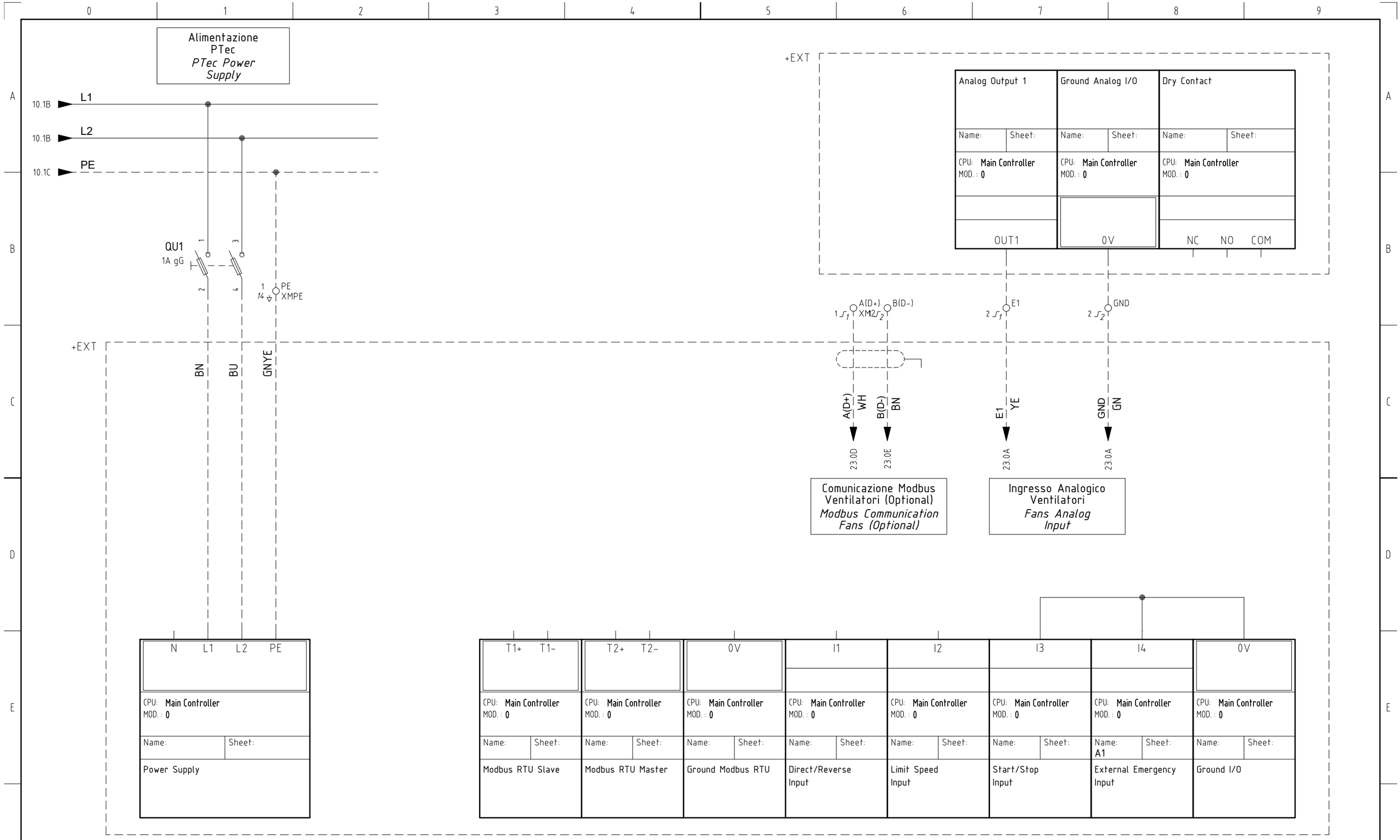

REV.	MODIFICATION	DATE	DRAW	CHECK	APPR.
00	First Issue	01/02/2022	APR	PEL	FW

ELECTRAIMPIANTI
ELECTRAIMPIANTI Srl
Via Adone Perin, 1 36073 - Cornedo Vic. - VI
tel. +39 0445 490445 - Fax +39 0445 490456
E-mail: info@electraimpianti.it

Draw. N.:	EI000962
CAD:	SPAC
File Name:	EI000962.dwg
Customer:	ELECTRAIMPIANTI

Plant: Control Panel ECCB2 10T H

Controllore
Controller

Doc.N°: 31419441

Job/Series: P00045-000

FG. 20

F.S. 21

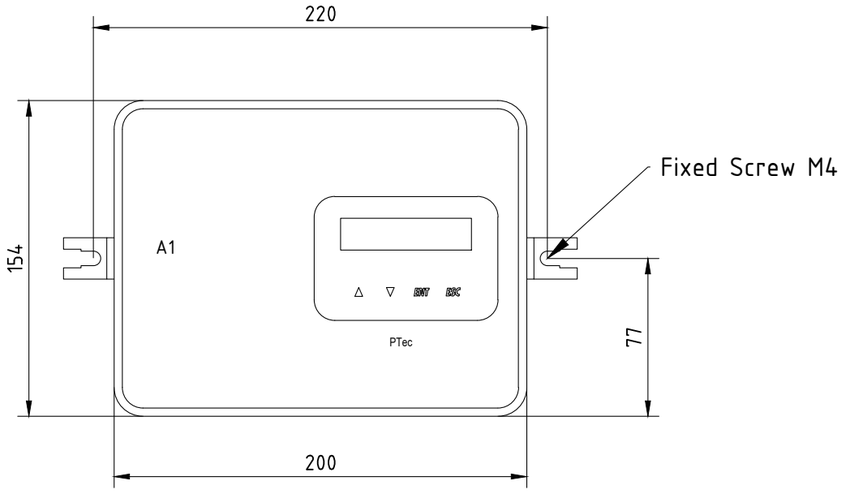

CONTROLS TERMINAL BOARD

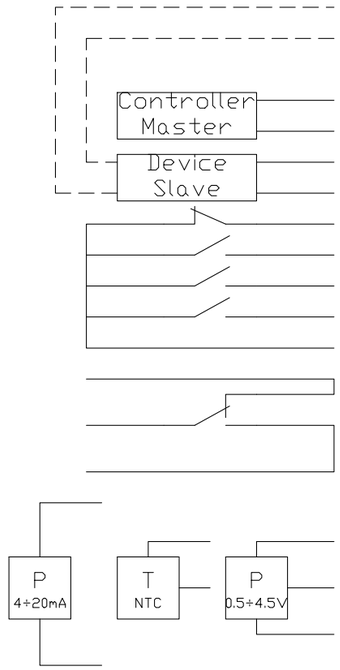

Term.	Description
T2 -	Serial RS485, Modbus RTU - master
T2+	Serial RS485, Modbus RTU - master
0V	Ground I/O
T1 -	Serial RS485, Modbus RTU - slave
T1+	Serial RS485, Modbus RTU - slave
OUT1	Analogical output 1, type 0...10V= (max 15mA)
0V	Mass I/O
I4	External emergency input
I3	Start/Stop input
I2	Limit Speed function input
I1	Direct/Reverse function input
0V	Ground I/O
NC	Relay 1 closed norm. contact output
COM	Relay 1 common contact output (1A-250V~/3A-30V=)
NO	Relay 1 open norm. contact output
+V	12V power supply output = (max 30mA)
+5V	5V power supply output = (max 15mA)
IN1	Analogical input 1, type 0,5…4,5V / ntc (10 kΩ @25°C, β3435), (Ri = 10 kΩ)
0V	Ground I/O
4÷20	Analogical input 1, type 4…20mA (Ri = 100 Ω)

CONTROLS TERMINAL BOARD (EXPANSION CARD I/O)

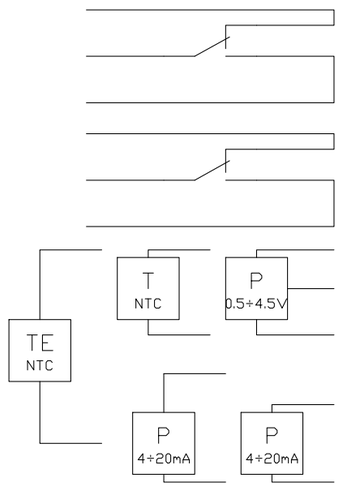

Term.	Description
NC	Relay 3 closed norm. contact output
COM	Relay 3 common contact output (1A-250V~/3A-30V=)
NO	Relay 3 open norm. contact output
NC	Relay 2 closed norm. contact output
COM	Relay 2 common contact output (1A-250V~/3A-30V=)
NO	Relay 2 open norm. contact output
+5V	Power supply output 5V=(max 15mA)
0V	Ground I/O
IN 2	Analogical input 2, type 0,5…4,5V / ntc (10 kΩ @25°C, β3435), (Ri = 10 kΩ)
4÷20	Analogical input 2, type 4…20mA (Ri = 100 Ω)
4÷20	Analogical input 3, type 4…20mA (Ri = 100 Ω)
TE	Ambient sensor input NTC (10kΩ @25°C)
+V	Power supply output 12V= (max 100mA)
0V	Ground I/O
OUT2	Analogical output 2, tipo 0...10V= (max 15mA)

+V	+5V	IN1	4.20	0V
CPU: Main Controller MOD. : 0	CPU: Main Controller MOD. : 0	CPU: Main Controller MOD. : 0	CPU: Main Controller MOD. : 0	CPU: Main Controller MOD. : 0
Name: / Sheet:	Name: / Sheet:	Name: A1 / Sheet:	Name: A1 / Sheet:	Name: A1 / Sheet:
		Analog Input 1	Analog Input	Ground Analog I/O

REV.	MODIFICATION	DATE	DRAW	CHECK	APPR.
00	First Issue	01/02/2022	APR	PEL	FW

ELECTRAIMPIANTI
ELECTRAIMPIANTI Srl
Via Adone Perin, 1 36073 - Cornedo Vic. - VI
tel. +39 0445 490445 - Fax +39 0445 490456
E-mail: info@electraimpianti.it

Draw. N.:	EI000962
CAD:	SPAC
File Name:	EI000962.dwg
Customer:	ELECTRAIMPIANTI
Plant	Control Panel ECCB2 10T H
	Controllore *Controller*
Doc.N°	31419441
Job/ Series:	P00045-000
FG.	21
F.S.	22

Allarme Cumulativo
(Contatto Pulito)
Cumulative Alarm
(Dry Contact)

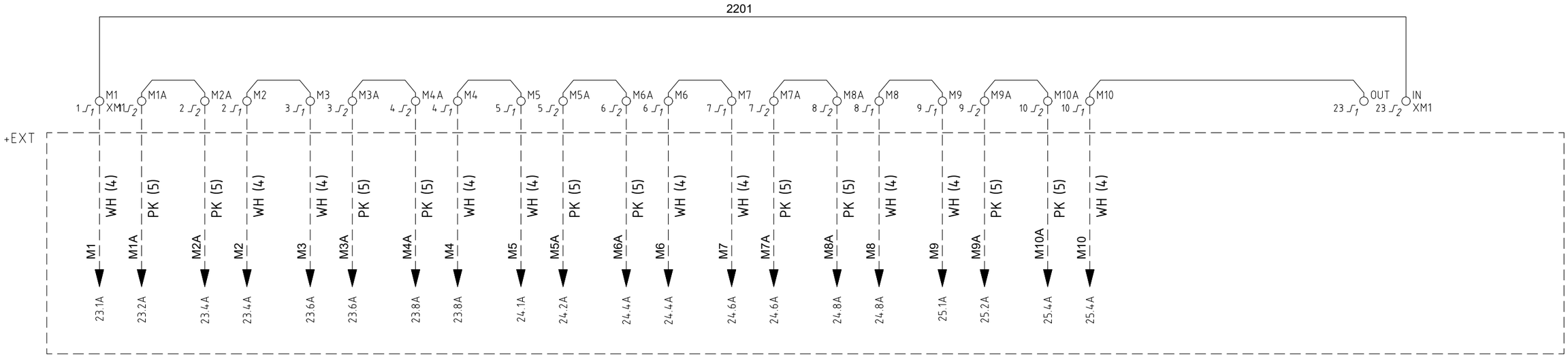

Nota 1: Configurazione
Alternativa del Cavo tra Parentesi

Note 1: Cable Alternative
Configuration in Brackets

REV.	MODIFICATION	DATE	DRAW	CHECK	APPR.
00	First Issue	01/02/2022	APR	PEL	FW

ELECTRAIMPIANTI
ELECTRAIMPIANTI Srl
Via Adone Perin, 1 36073 - Cornedo Vic. - VI
tel. +39 0445 490445 - Fax +39 0445 490456
E-mail: info@electraimpianti.it

Draw. N.:	EI000962
CAD:	SPAC
File Name:	EI000962.dwg
Customer:	ELECTRAIMPIANTI

Plant: Control Panel ECCB2 10T H

Allarmi Ventilatori
Fans Alarms

Doc.N°: 31419441

Job/Series: P00045-000

FG. 22
F.S. 23

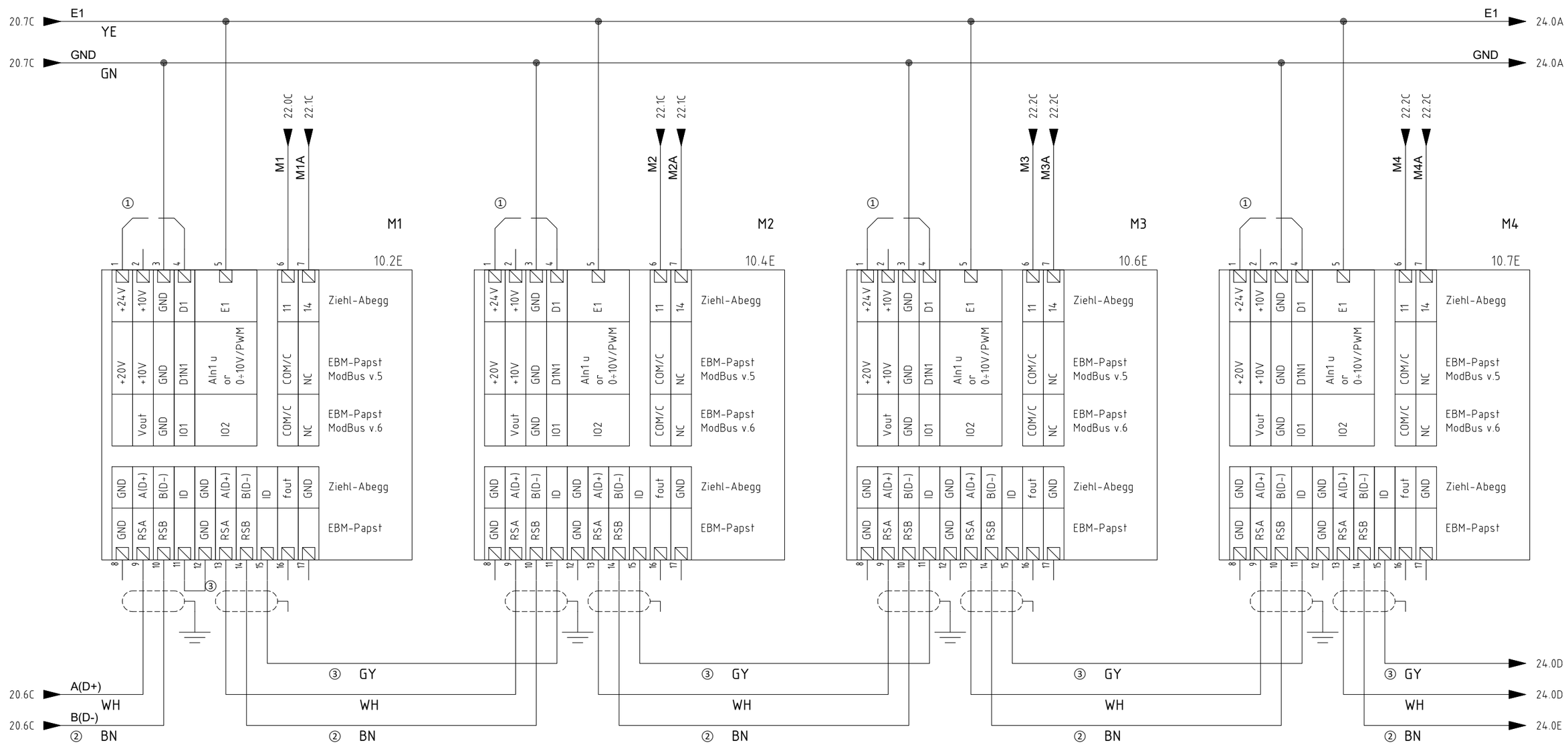

① Connessione Necessaria Solo Per Ventilatori Ziehl-Abegg

① Connection Required Only For Ziehl-Abegg Fans

② Connessione Modbus Opzionale Solo Per Ventilatori Ziehl-Abegg

② Modbus Connection Is Optional Only For Ziehl-Abegg Fans

③ Connessione Modbus Opzionale Solo Per Ventilatori Ziehl-Abegg

③ Modbus Connection Is Optional Only For Ziehl-Abegg Fans

REV.	MODIFICATION	DATE	DRAW	CHECK	APPR.
00	First Issue	01/02/2022	APR	PEL	FW

ELECTRAIMPIANTI
ELECTRAIMPIANTI Srl
Via Adone Perin, 1 36073 - Cornedo Vic. - VI
tel. +39 0445 490445 - Fax +39 0445 490456
E-mail: info@electraimpianti.it

Draw. N.:	EI000962
CAD:	SPAC
File Name:	EI000962.dwg
Customer:	ELECTRAIMPIANTI

Plant: Control Panel ECCB2 10T H

Connessione Ventilatori
Fans Connections

Doc.N°: 31419441

Job/Series: P00045-000

FG. 23

F.S. 24

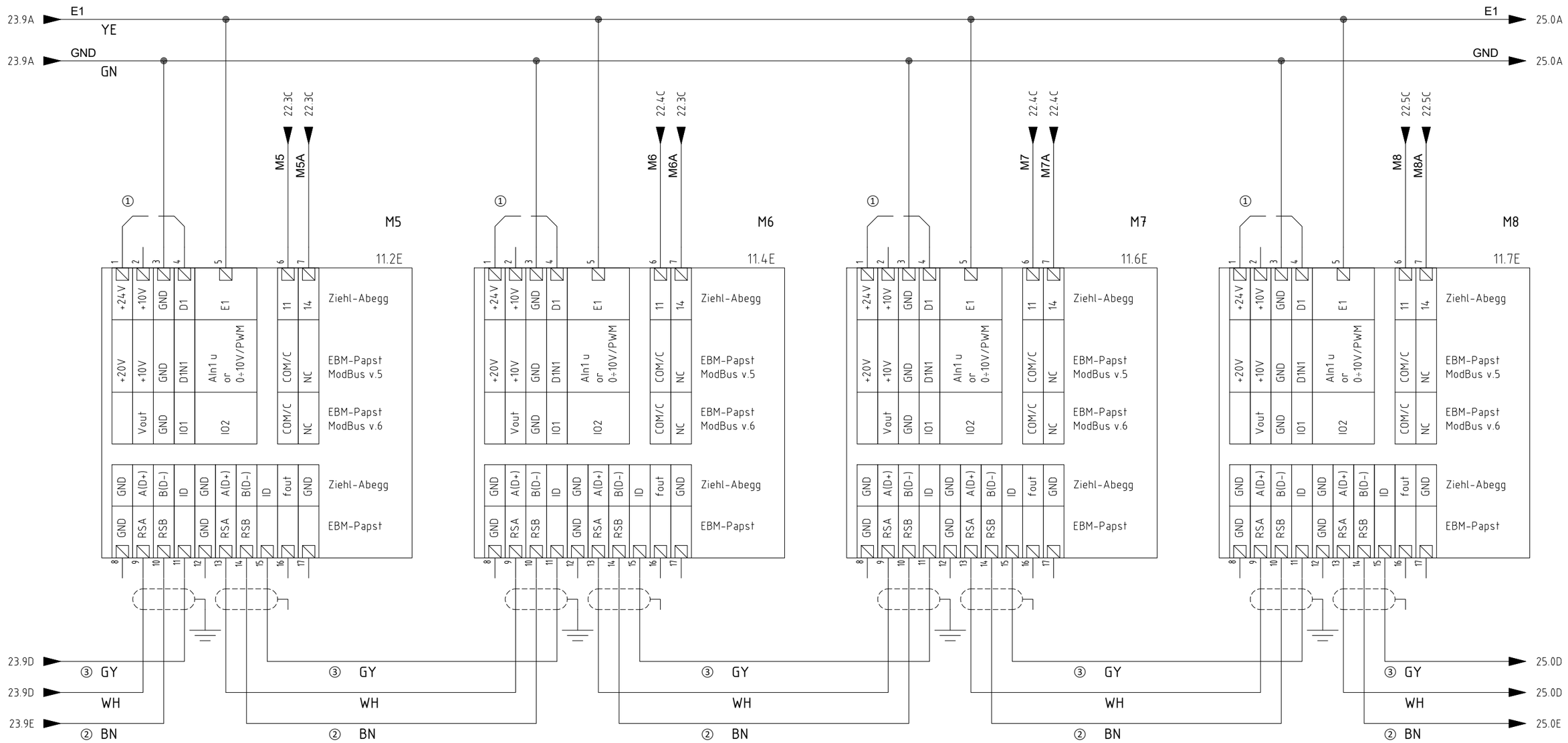

① Connessione Necessaria Solo Per Ventilatori Ziehl-Abegg

① Connection Required Only For Ziehl-Abegg Fans

② Connessione Modbus Opzionale Solo Per Ventilatori Ziehl-Abegg

② Modbus Connection Is Optional Only For Ziehl-Abegg Fans

③ Connessione Modbus Opzionale Solo Per Ventilatori Ziehl-Abegg

③ Modbus Connection Is Optional Only For Ziehl-Abegg Fans

REV.	MODIFICATION	DATE	DRAW	CHECK	APPR.
00	First Issue	01/02/2022	APR	PEL	FW

ELECTRAIMPIANTI
ELECTRAIMPIANTI Srl
Via Adone Perin, 1 36073 - Cornedo Vic. - VI
tel. +39 0445 490445 - Fax +39 0445 490456
E-mail: info@electraimpianti.it

Draw. N.:	EI000962
CAD:	SPAC
File Name:	EI000962.dwg
Customer:	ELECTRAIMPIANTI

Plant: Control Panel ECCB2 10T H

Connessione Ventilatori
Fans Connections

Doc.N°: 31419441

Job/Series: P00045-000

F.G. 24

F.S. 25

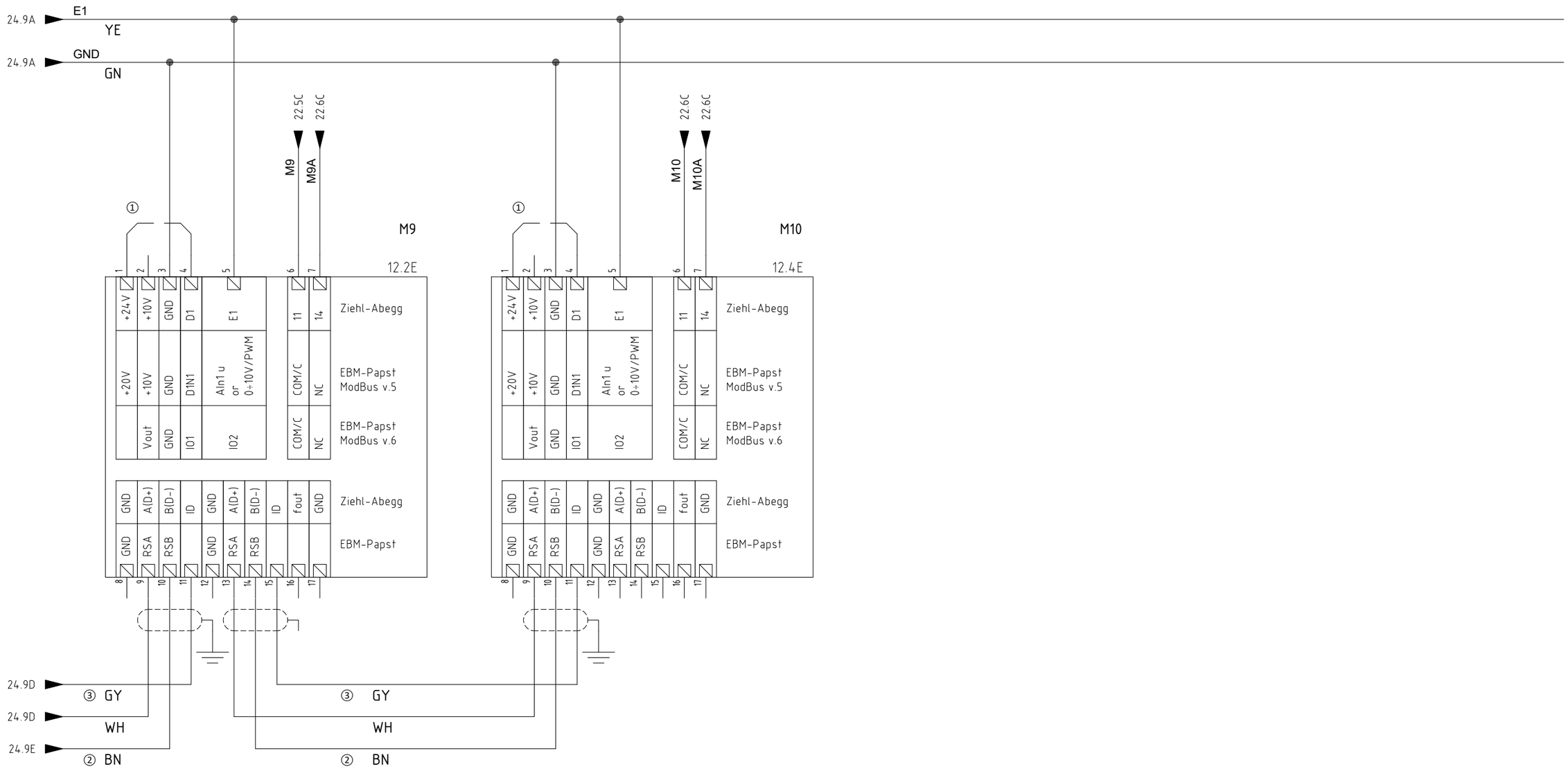

① Connessione Necessaria Solo Per Ventilatori Ziehl-Abegg

① Connection Required Only For Ziehl-Abegg Fans

② Connessione Modbus Opzionale Solo Per Ventilatori Ziehl-Abegg

② Modbus Connection Is Optional Only For Ziehl-Abegg Fans

③ Connessione Modbus Opzionale Solo Per Ventilatori Ziehl-Abegg

③ Modbus Connection Is Optional Only For Ziehl-Abegg Fans

REV.	MODIFICATION	DATE	DRAW	CHECK	APPR.
00	First Issue	01/02/2022	APR	PEL	FW

ELECTRAIMPIANTI
ELECTRAIMPIANTI Srl
Via Adone Perin, 1 36073 - Cornedo Vic. - VI
tel. +39 0445 490445 - Fax +39 0445 490456
E-mail: info@electraimpianti.it

Draw. N.: EI000962
CAD: SPAC
File Name: EI000962.dwg
Customer: ELECTRAIMPIANTI

Plant: Control Panel ECCB2 10T H

Connessione Ventilatori
Fans Connections

Doc.N°: 31419441

Job/Series: P00045-000

FG. 25
F.S. 30

=QG - XM1
Motor Alarms

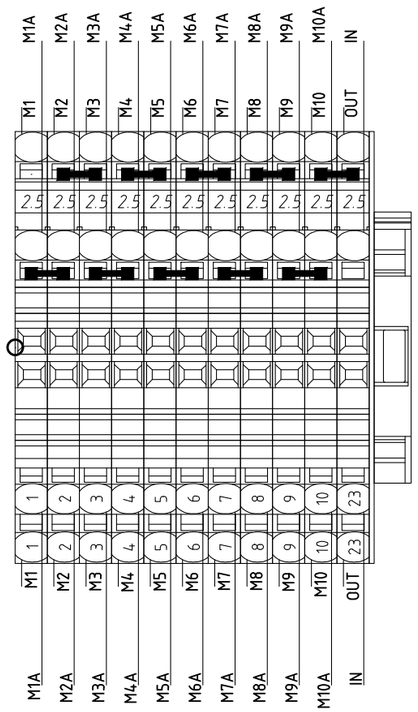

=QG - XM2
Signals

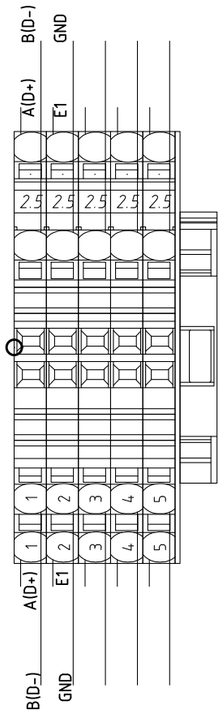

00	First Issue	01/02/2022	APR	PEL	FW
REV.	MODIFICATION	DATE	DRAW	CHECK	APPR.

ELECTRAIMPIANTI
ELECTRAIMPIANTI Srl
Via Adone Perin, 1 36073 - Cornedo Vic. - VI
tel. +39 0445 490445 - Fax +39 0445 490456
E-mail: info@electraimpianti.it

Draw. N.:	EI000962
CAD:	SPAC
File Name:	EI000962.dwg
Customer:	ELECTRAIMPIANTI

Plant: Control Panel ECCB2 10T H

Morsettiera
Terminal

Doc.N°: 31419441

Job/Series: P00045-000

FG. 30

F.S. 31

=QG - XM1

Motor Alarms

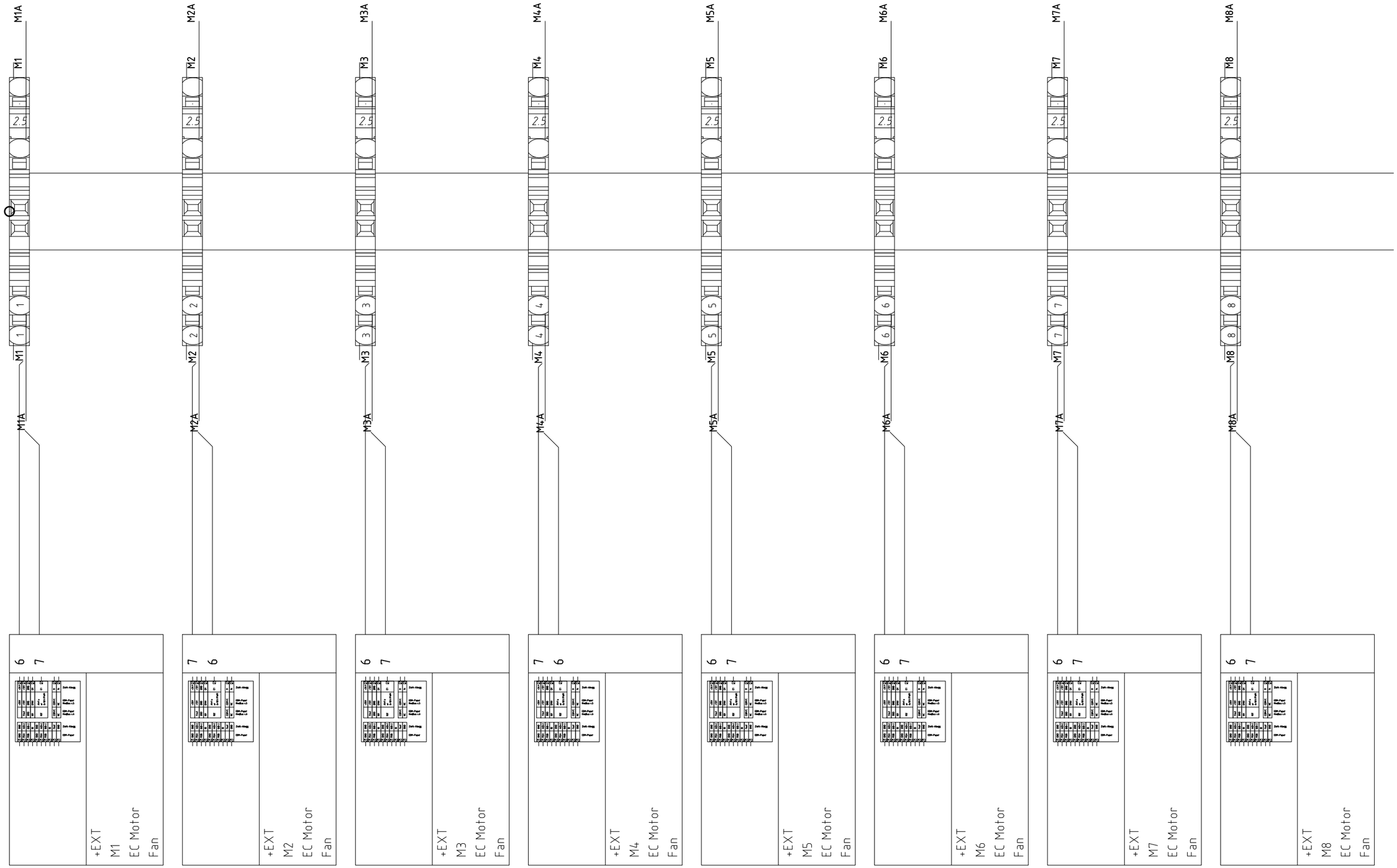

REV.	MODIFICATION	DATE	DRAW	CHECK	APPR.
00	First Issue	01/02/2022	APR	PEL	FW

ELECTRAIMPIANTI
ELECTRAIMPIANTI Srl
Via Adone Perin, 1 36073 - Cornedo Vic. - VI
tel. +39 0445 490445 - Fax +39 0445 490456
E-mail: info@electraimpianti.it

Draw. N.:	EI000962
CAD:	SPAC
File Name:	EI000962.dwg
Customer:	ELECTRAIMPIANTI

Plant: Control Panel ECCB2 10T H

Morsettiera
Terminal

Doc.N°: 31419441

Job/ Series: P00045-000

FG. 31

F.S. 32

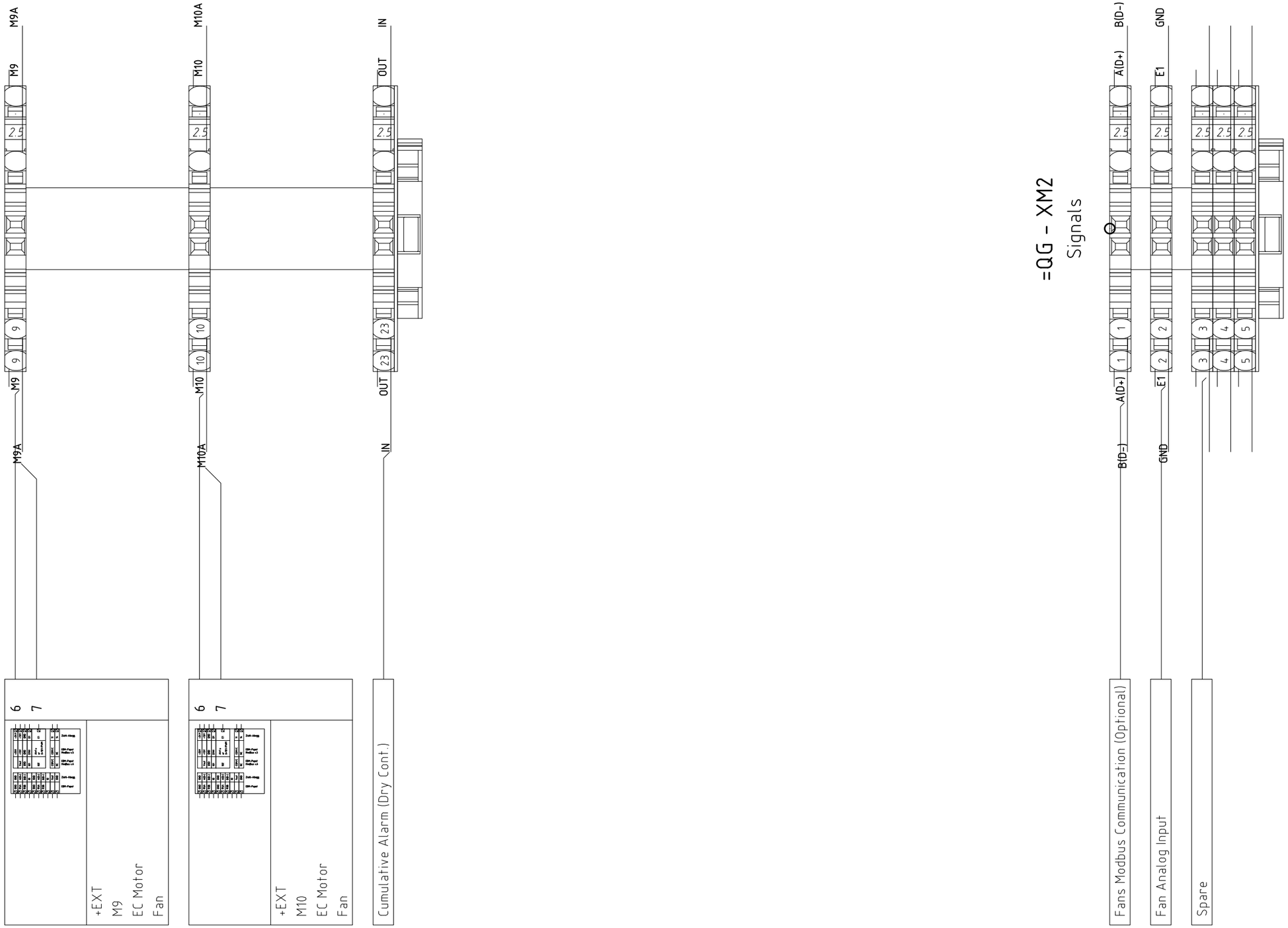

REV.	MODIFICATION	DATE	DRAW	CHECK	APPR.
00	First Issue	01/02/2022	APR	PEL	FW

ELECTRAIMPIANTI
ELECTRAIMPIANTI Srl
Via Adone Perin, 1 36073 - Cornedo Vic. - VI
tel. +39 0445 490445 - Fax +39 0445 490456
E-mail: info@electraimpianti.it

Draw. N.:	EI000962
CAD:	SPAC
File Name:	EI000962.dwg
Customer:	ELECTRAIMPIANTI

Plant: Control Panel ECCB2 10T H

Morsettiera
Terminal

Doc.N°: 31419441

Job/Series: P00045-000

FG. 32

F.S. /