# Alfa-V VLD

## Instruction manual



ORIGINAL INSTRUCTIONS

31413096EN-05

# Index

# 1 Important information

## 1.1 Disclaimer

This Instruction Manual applies to all Alfa-V VLD industrial dry coolers and is supplied in combination with the Air Cooled Liquid Coolers Product Manual AHE00050. Both manuals must be carefully examined and instructions should be followed up at all times. Alfa LU-VE does not accept liability for any damage resulting from non-compliance to the instructions as given in the manuals and order-related documents.

## 1.2 Intended use

Liquid coolers are partly completed machinery according to Machine Directive 2006/42/EC and intended for incorporation in cooling systems.
Declarations of Incorporation are available on alfa.luvegroup.com. The units may not be put into operation until the conformity of the complete machine or cooling system has been declared according to the following standards and directives:

- Pressure Equipment Directive 2014/68/EU
- Machine Directive 2006/42/EC
- Low Voltage Directive 2014/35/EU
- Electrical Equipment of Machines IEC 60204-1
- Electro Magnetic Compatibility 2014/30/EU
- Any applicable local or national legislation

## 1.3 Where to find product information

Detailed technical data for individual product models are available in order related documents, on the product label and in product data sheets. Comprehensive technical information for all Alfa LU-VE air heat exchanger products is available on-line on alfa.luvegroup.com. This includes:

- Product manuals
- Instruction manuals
- Product leaflets & brochures
- Product data sheets (selection software)
- Dimensional drawings
- Electrical wiring diagrams
- Certificates

Alfa-V VLD

Alfa LU-VE offers world-wide service and support. In case of any questions or uncertainty please contact your local Alfa LU-VE representative.
Contact addresses are available at alfa.luvegroup.com.

# 2 Product description

## 2.1 General information and application

Alfa-V VLD air cooled liquid coolers have been designed for closed circuit cooling of various process liquids in heavy industrial applications, even in the most severe environments.
Applications include gas or diesel engines and turbine cooling in power plants, electrical distribution in HVDC cooling systems, process cooling from food, plastic industry, steel mill industry, etc.
Alfa-V VLD dry coolers provides high capacity in compact footprint at reduced power consumption.
Thanks to the modular design, the cooling capacity can reach several MW.

- Capacity range (water, EN1048): 100 up to 2000 kW.
- Design pressure: 10 bar. Each heat exchanger is leak tested with dry air at 15 bar. Higher design pressure on demand.

## 2.2 Standard configuration

- Coil:
  Optimized coil geometry provides excellent heat transfer, low pressure drop and low fouling thanks to the smooth fins and the large air passage. By default, fins are in Industrial aluminium. Piping material: copper ø 12 mm (VLD), copper ø 16 mm (VLD6) brazed to copper manifolds and stainless steel (VLDY) TIG welded to stainless steel manifolds. Flanged connections PN10/16 according to EN1092. Manifolds equipped with venting and draining nozzles, on request with manual ball valves.

| | Coil design temperature | |
|---|---|---|
| | min | max |
| Manifolds | -60 °C | 110 °C |
| Header box | -40 °C | 110 °C |

  Higher design temperatures on demand. Separate connections provide the opportunity for independent operation of both cooling coils.
- Casing:
  Construction provides high rigidity to withstand vibrations, thermal expansion and rough environmental conditions. Casing, supports and frame made of corrosion resistant hot-dip galvanized steel plates, class C4-H as basic level. Alfa LU-VE design fan-collars made in composite material to optimize air distribution increasing performance and reducing energy consumption and noise level. Separated fan sections.
- Fan motors:
  Squirrel-cage electric motors, designed exploiting decades of experience in outdoor use. Built to IEC standard 6, 8, 10 or 12 poles, provided with: condensing water outlets, shaft seals and H-class insulation. Construction optimized for use on air heat exchangers. Motors pre-wired to lockable service switches placed outside the fan-collar. Available for various power supplies (std 400/3/50, 460/3/60). Impellers ø 1.5 m are made in high efficiency aluminium wing-blade profile for reduced power consumption and noise emissions.

## 2.3 Options

- Fin spacing: 2 mm to 3.5 mm
- Fins:
  - Aluminium Magnesium alloy (SWR)
  - Aluminium pre-coated (EP)
  - Aluminium spray-coated (FC)
  - R-fin™ technology
- Removable header box (ASME design) - for VLDY when not equipped with cylindrical headers
- Spray water kit (KW)
- Complete spray water system, incl. pump (SWS)
- Fan-collar in galvanized steel
- Casing coated C4-H or C5-H, with customized thickness and RAL color
- Customized connections: counter flanges, flexible connection joints and ANSI flanges, etc.

- Container skid (SK)
- Mounting kit: 1 or 2 m legs, handrails and ladder
- Top cover
- Electrical accessories:
  - EMC cables, glands and service switches each fan-motor (EMC)
  - Motors equipped with anticondensation heaters, thermal overload Klixon and vibration monitors
  - Motors wired to a common terminal box (CB)
  - Basic switchboard (B)
  - Basic switchboard with frequency converter and manual bypass (BFC)
  - Basic switchboard with frequency converter, manual bypass and temperature probe (BFCT)

### 2.4 Code description

| VLD | 180 | 15 | 3 | A | * | - | * | 1xDN100 | S | * | - | * |
|---|---|---|---|---|---|---|---|---|---|---|---|---|
| 1 | 2 | 3 | 4 | 5 | 6 | | 7 | 8 | 9 | 10 | | 11 |

1 Alfa-V Large dry cooler (VLD=12 mm copper tubes, VLD6=16 mm copper tubes, VLDY=SS tubes)
2 Finned length (cm)
3 Fan diameter (15=1500 mm)
4 Number of modules
5 Power supply (A=3/380-420V/50 Hz, B=3/440-480V/60 Hz, C=other)
6 Nr of poles
7 Nr of circuits (each coil)
8 Flanged connections number and size (each bundle)
9 Position of the flanges connections (S=same side, O=opposite side)
10 Finned coil depth
11 Options

# 3 Product labels

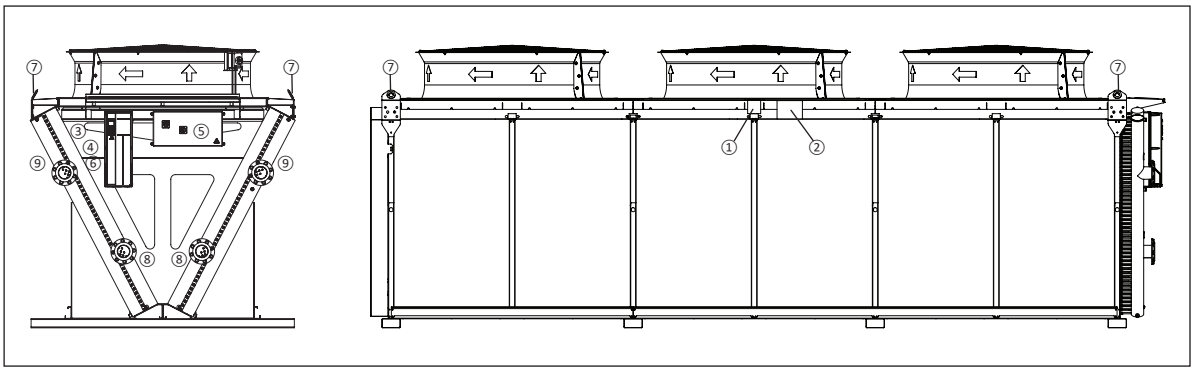

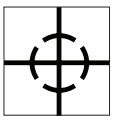


**1. Centre of gravity**
Forklifts can be used to lift 1 to 3 modules units only: always place the forks under the center of gravity.

**2. Handle with care**
When handling the unit, always take maximum care.

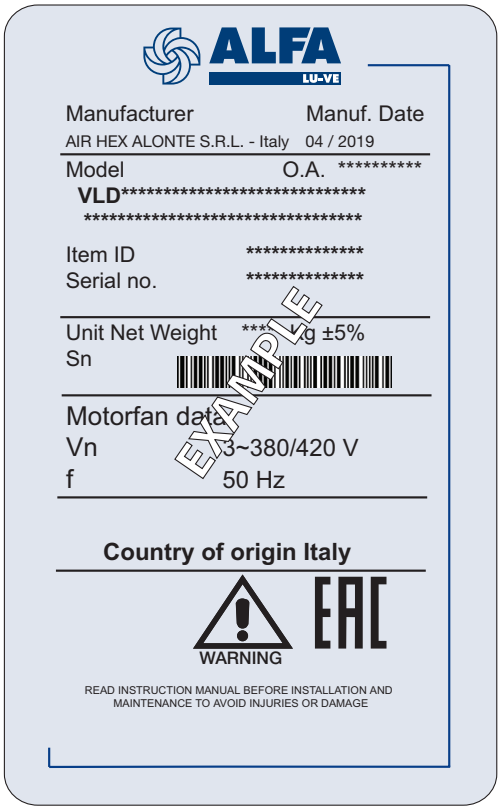


## 3. Product label

| | |
|---|---|
| Model | Refer to paragraph "2.4 Code description" |
| Item ID<br>Serial no. | Communicate these when ordering spare parts as they identify the unit. |
| O. A. | Order Acknowledgement number |
| Unit Net Weight | Check before any lifting operation to ensure that proper lifting tools are used. |

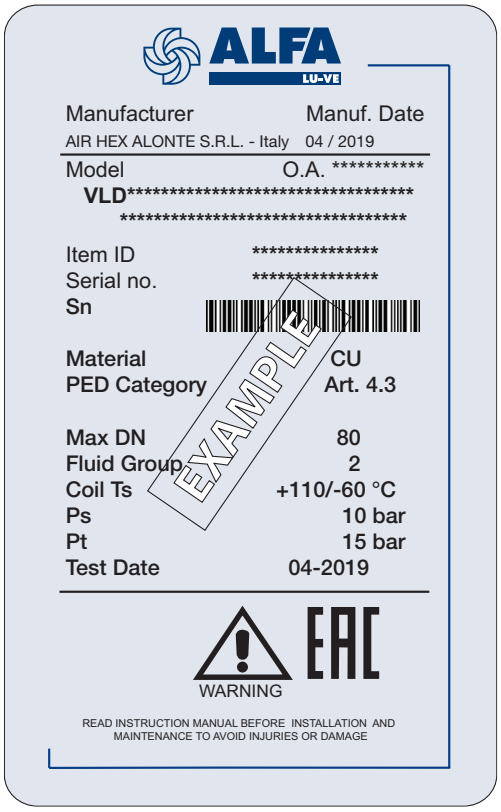


## 4. Product label - coil

| | |
|---|---|
| Model | Refer to paragraph "2.4 Code description" |
| Item ID<br>Serial no. | Communicate these when ordering spare parts as they identify the unit. |
| Material | Tube material |
| PED Category | According to PED |
| Max DN | Maximum diameter of the distributor tube |
| Fluid Group | According to PED |
| Coil Ts | Range of operating temperatures for the coil |
| Ps | Design pressure |
| Pt | Test pressure |
| Test date | Date on which the coil has been pressure tested in the factory |

**5. Electrical warning**
Electrically powered component. Switch off power supply before any maintenance or installation activity.

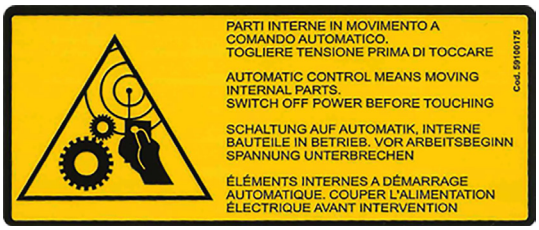


**6. Moving parts**
Warning: moving parts.
Switch off power supply before any maintenance or installation activity.

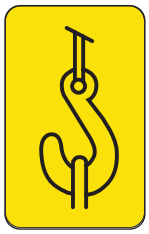

**7. Lifting lug**
Use all marked lifting lugs when lifting from above.

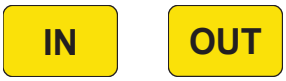


**8. & 9. In/Out**
Connections inlet and outlet.

**Grounding**
Whenever electrical components supplied by Alfa LU-VE have this sticker, is mandatory to ground them. The yellow/green grounding wire must be left longer than the others, to ensure that it is the last one to be detached from the terminals in the event of the cable being pulled off. Grounding is designed for the electrical equipment supplied with the unit and is not to be intended as protection from external sources.

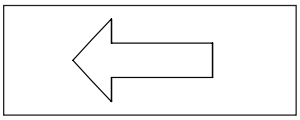

**Fan rotation**
Imprinted arrow or sticker on the fan cowl indicates fan rotation direction.

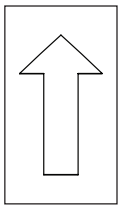

**Air direction**
Imprinted upwards arrow on the fan cowl indicates air direction.

# 4 Unpacking and lifting

Always follow guidelines and instructions as given in the air cooled liquid coolers product manual AHE00050.
Before lifting the unit, check the weight stated on the name plate, located on the inlet connection side. Verify that the lifting equipment supports at least the unit weight plus 10%.

- Forklifts can be used only with 1 to 3 modules units.
- When forklifts are used, forks must be longer than 2.5 m for safe lifting and be fully inserted under the unit.
- Unit shall be lifted only when empty.

Alfa-V VLD dry coolers can be delivered either on standard trucks or in containers.

## 4.1 Unit delivered by standard truck

The procedure below applies to the unloading of units delivered on standard trucks.

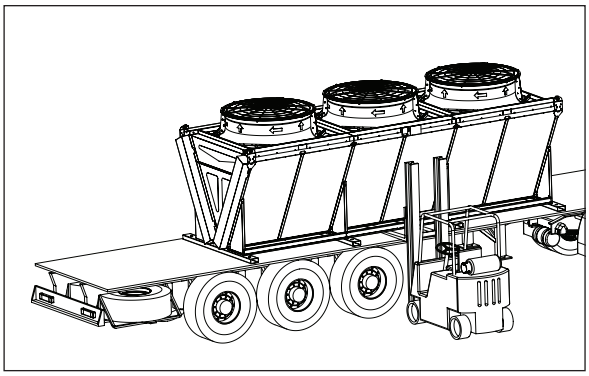

**1-3 modules:**
can be unloaded from the side of the truck with the use of a forklift.

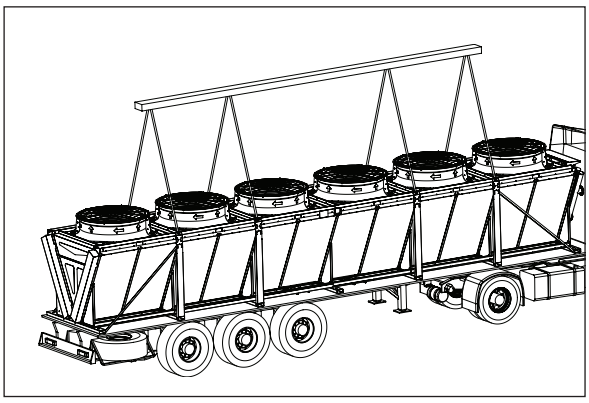

**4-6 modules:**
shall be always lifted from above.
Follow the procedure described in paragraph "4.3 Lifting from above".

## 4.2 Unit delivered in a container

In case of container delivery, container skid option is to be selected in order to facilitate the loading and unloading operations. Follow the procedure below to unload the unit:

- Remove any obstacle to allow the skid sliding out of the container.
- Ensure the truck is stopped.

Fix the chain to a forklift (identified by letter A) and the hooks in the skid holes.

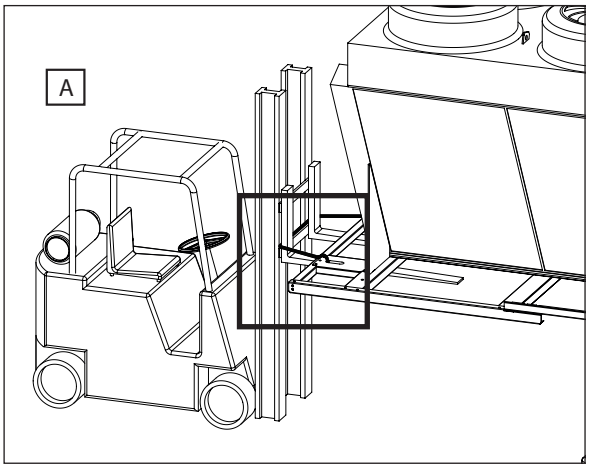


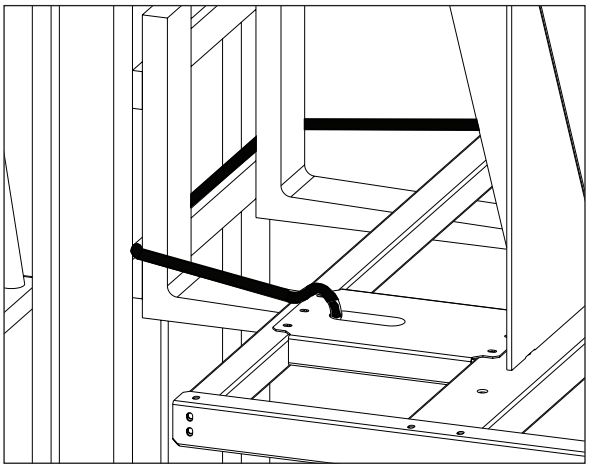

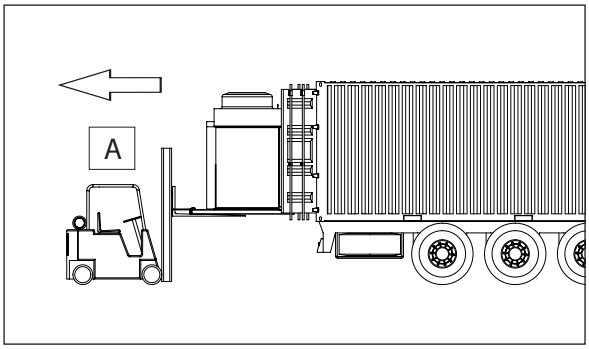


**1-3 modules:**
With forklift A, support the unit weight and pull it slowly out of the container. The unit must remain on the container floor for at least 1 m.

The space between the unit and the roof of the container is reduced. Contact with the roof can cause damage to the unit.

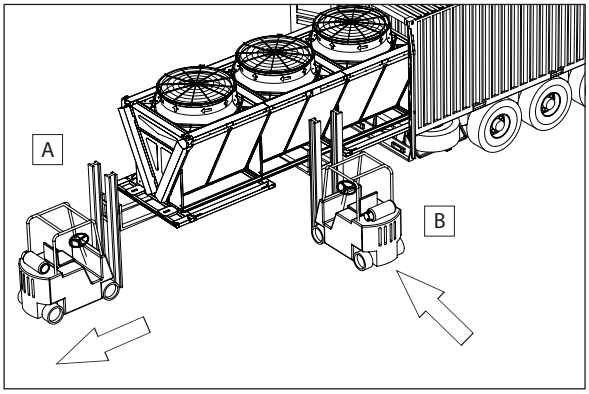


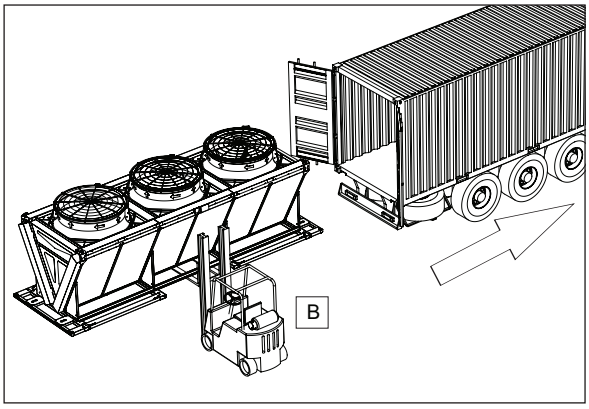


With a second forklift (identified by letter B), insert the forks (under the centre of gravity) and slightly lift the unit.

Remove hooks and chains and drive away with forklift A.

**4-6 modules:**

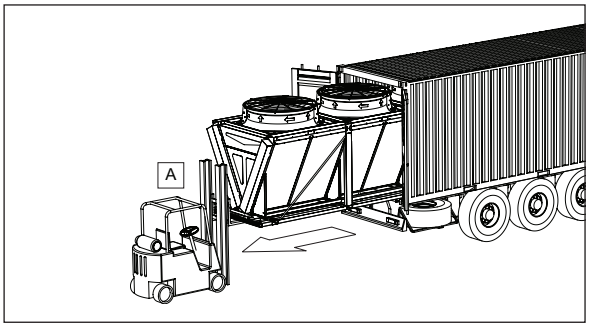


With forklift A, support the unit weight and pull it slowly out until all the lifting lugs are outside the container. The unit should remain on the container floor for at least 1 m.

The space between the unit and the roof of the container is reduced. Contact with the roof can cause damage to the unit.

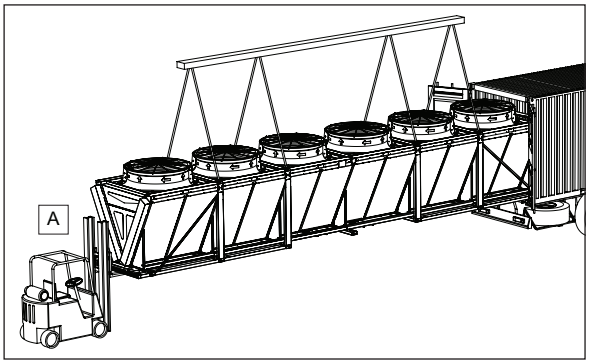


Attach all the lifting lugs to the crane hoisting beam following the procedure described in paragraph "Lifting from above".

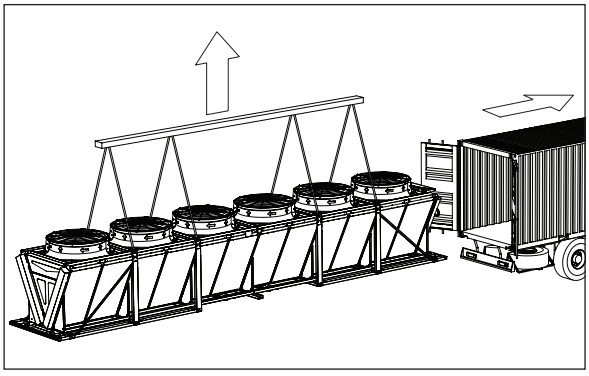

When the crane holds up the unit, remove forklift A. Slightly lift the unit and slowly drive forward with the truck until the unit is completely outside the container.

Slowly drive forward with the truck until the unit is completely outside the container.

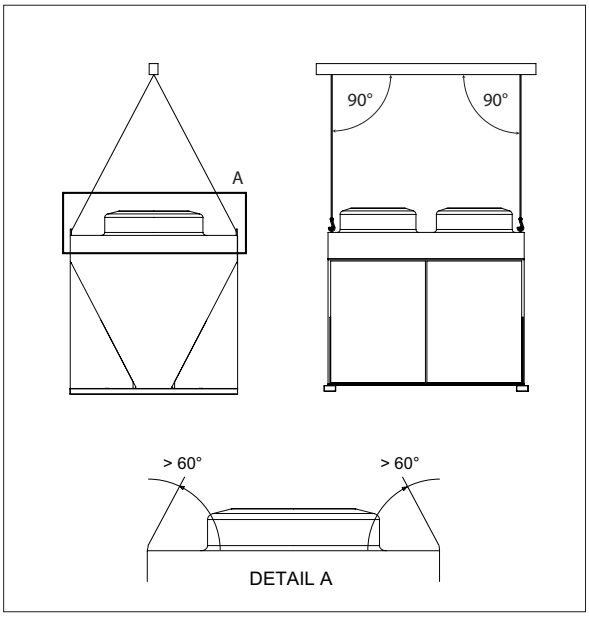


## 4.3 Lifting from above

Verify that lifting lugs are safely fixed to the unit and have no signs of damage. Attach the belts or hooks only to the lifting lugs marked with the "Lifting lug" label.

Angle of chains as shown for all models.

Load on the lifting chains shall be equally distributed on all the lifting points. If one chain is not fully loaded another chain will be extra loaded. This is not allowed.

# 5 Installation

Always follow guidelines and instructions as given in the liquid coolers product manual AHE00050.

### 5.1 Container skid removal (if present)

Container skid option is not a structural element and it is selected only to facilitate loading and unloading operations.
Container skid shall be removed before installation: unscrew fixings to the unit and pull out the skid.

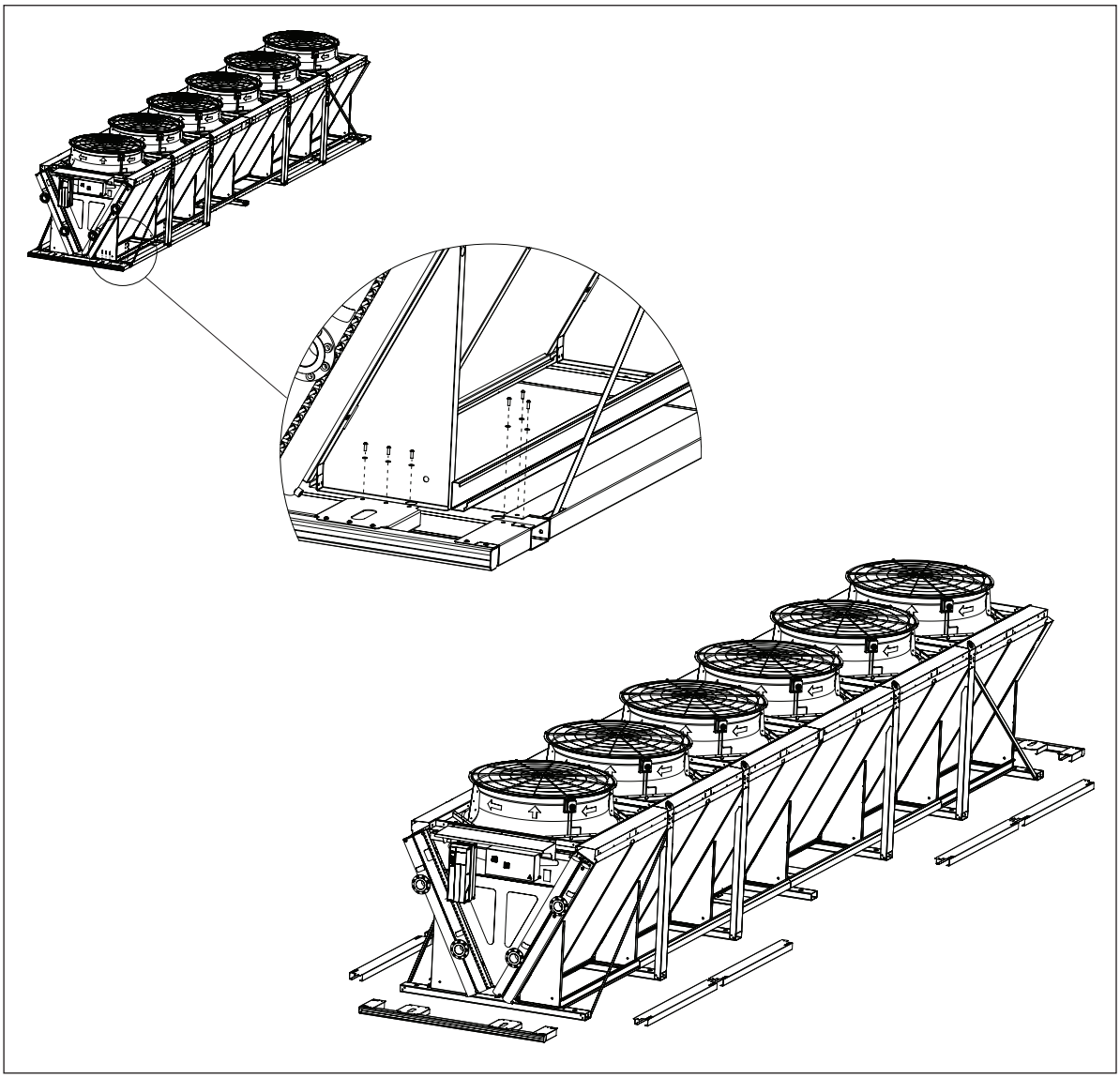

### 5.2 Mounting dimensions

Drawings available on request.
Please contact your local Alfa LU-VE representative for assistance.

## 5.3 Feet dimensions detail

Feet dimensions are identical for all models. Avoid any lateral torque on the feet when fixing the unit. Fixing holes can be used to fix the unit to the ground or to a beam structure and for the installation of vibration dampers.

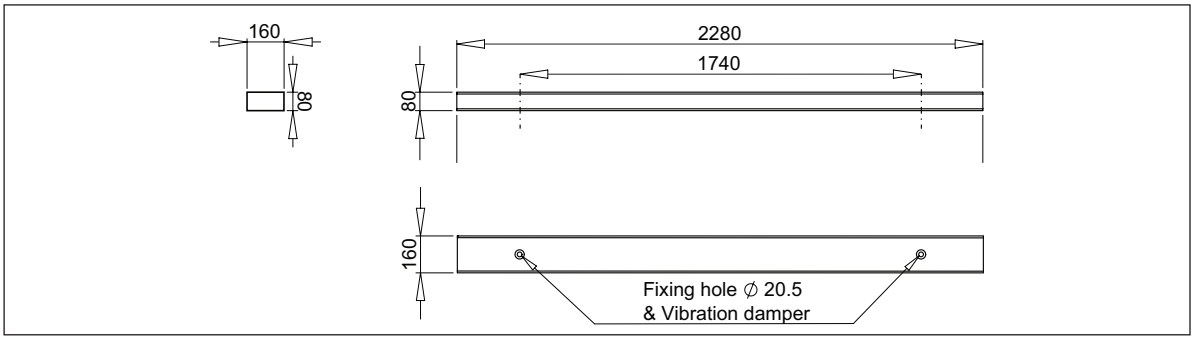


## 5.4 Concrete mounting base

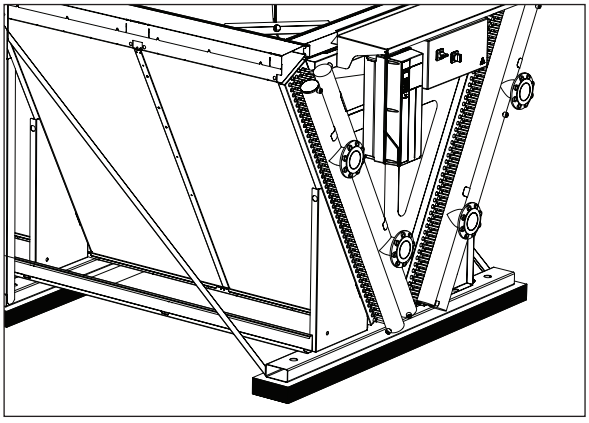

To avoid oxidation of the equipment feet, it is strongly recommended to mount the heat exchanger on concrete mounting bases. One base for each foot. Base minimum dimensions are 100 mm height and 260 mm width.

## 5.5 Vibration dampers

For active and passive isolation of vibrations and reducing noise transmission, Alfa LU-VE recommends the installation of vibration dampers.
Installation of vibration dampers must be carried out before positioning the unit. Vibration dampers are to be positioned between the unit feet and the mounting base with the supplied M16 screw.

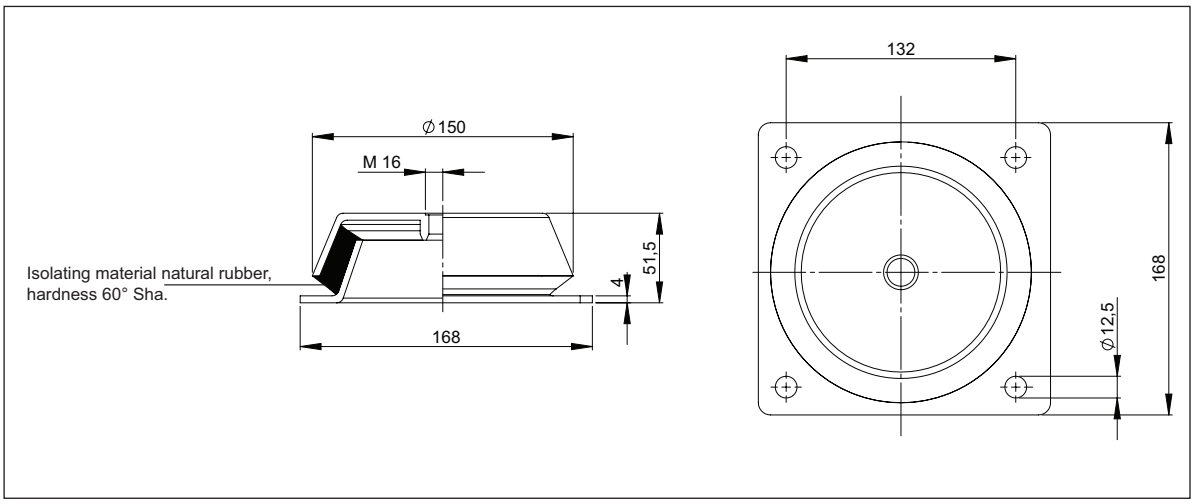

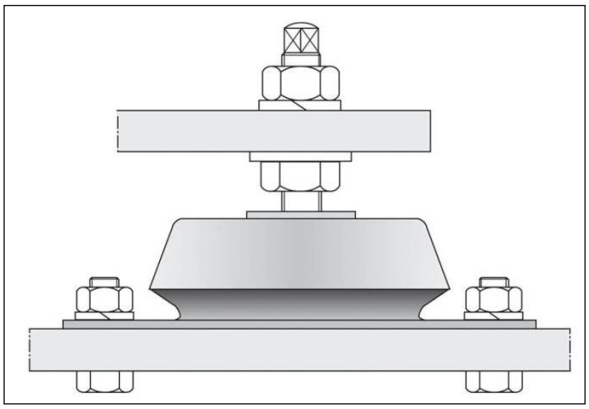

Picture shows an installation example using threaded bar, nut, grower washer, washer and locknut (not supplied).

This way vibration dampers can be used to make the cooler level adjusting the locknut. This is particularly useful with long units or irregular basement.

## 5.6 Expansion joints

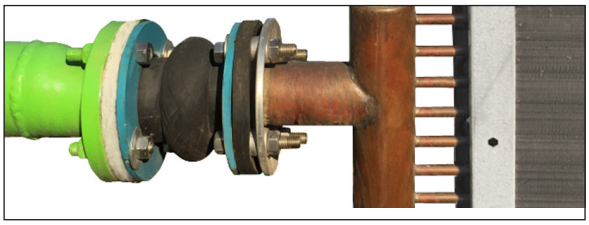

Alfa LU-VE recommends the installation of expansion joints on both inlet and outlet connections. Expansion joints are elastic elements which, if properly installed, absorb the thermal expansions of the tubing. Expansion joints are also helpful in order to reduce vibrations in the piping.

## 5.7 Installation layout guideline

Ensure installation is such that the following conditions are met:

- Place the unit outdoor in a such way that it can be monitored from all sides at all times.
- Ensure that sufficient space is available for maintenance.
- Verify the structures supporting capacity regarding the weight of the unit(s), including the liquid.

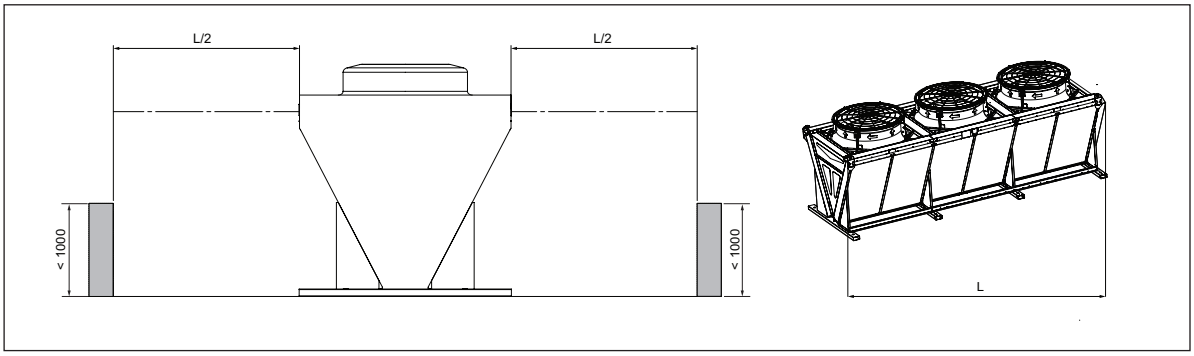


The unit spacings shown above are default values. If the unit is lifted from the ground, distances might be reduced. The 1000 mm shown above refers to the unit base and not necessarily to the ground. In case of doubt, to determine optimal unit spacing for specific conditions on site please contact your Alfa LU-VE representative for advise.

| | Number of units | | |
|---|---|---|---|
| Minimum height from ground (m) | 1 | 2 | 3 |
| 0 |  | - | - |
| 1 | 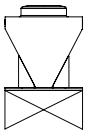 | 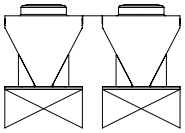 <br>with mandatory top cover | - |
| 1.5 | - | 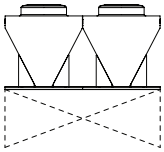 <br>platform not included in the scope of supply | - |
| 2 | - | - | 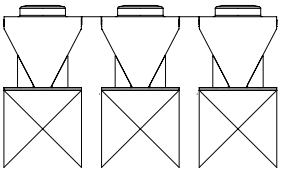 <br>with mandatory top cover |
| 3 | - | - | 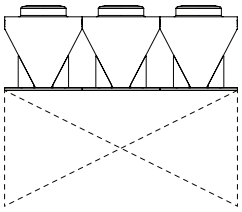 <br>platform not included in the scope of supply |

Contact Alfa LU-VE in case a different layout is required (units ≥ 4) .

Special care should be taken in particular circumstances, such as:

- When installation site is exposed to strong winds.
- When walls with different configuration or height than the ones shown in the previous pictures are present.
- When more than 4 units are installed on a single platform.
- When severe environmental loads (e.g. earthquakes) are likely to affect to the unit.

In these cases contact your local Alfa LU-VE representative for support.

### 5.8 Electrical connections

The following data determine which connection diagram is to be selected and respected for electrical installation:

- Heat exchanger model indication
- Fan motor type
- Electrical options

Electrical connection diagrams are available on request.
Please contact your local Alfa LU-VE representative for assistance.

# 6 Operation

## 6.1 Start-up procedure

The following procedure is to be respected at every system start-up.

- Close the liquid-in valve and open the liquid-out valve.
- Open unit vent plug and then fill the unit while venting.
- When all air has been discharged from the liquid circuit, close unit vent plug.
- Start liquid pump.
- Open system inlet valve slowly until the appropriate liquid flow is reached.
- Verify there are no leaks in the liquid circuit and connections.
- Switch on fan power supply.
- Start the fans and verify fan direction.
- After some operating time, check the absence of air in the liquid circuit (vent if needed) and verify that current absorbtion does not exceed the value as given in the technical specifications.

## 6.2 Shutdown

If the unit requires emptying for maintenance, system shutdown or dismounting, proceed as follows:

- Stop liquid supply and switch off electrical power supply.
- Make sure neither liquid nor power supply can be resumed accidentally or unexpectedly.
- Close liquid-in and liquid out valves.
- Install a proper hose at the drain valves. Open venting and draining valves. Attention: fluid may be hot.
- Make sure all drained liquid will be collected in a suitable vessel.
- Compressed air helps to drain in less time. Compressed air shall be oil free.

# 7 Maintenance

Ensure complete electrical isolation before performing any maintenance activity and always follow guidelines and instructions as given in the air cooled liquid coolers product manual AHE00050.

## 7.1 Cleaning

A coil block should be kept clean to guarantee it works well. The frequency of checks will depend on the site location and specific operating conditions. All Alfa-V coils can be washed by pressurized water up to 100 bar spraying, with flat fan jet perpendicular to fin direction to prevent bending or damaging. Care must be taken not to direct the water jet directly onto fan motors or electric control panels.

R-fin coils have been developed and tested to allow higher water pressure for washing, up to 150 bar and with inclined jet. Cleaning can be performed from outside the finned block without risk to collect water and dirtiness inside, thanks to the design of the bottom part of the frame that allows easy water and melted dirtiness flowing.

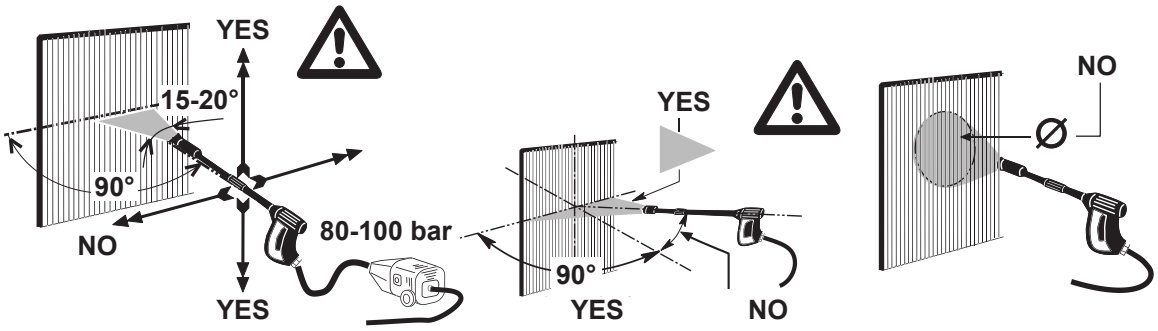


## 7.2 Guidelines for regular service inspections

| Task | Suggested inspection interval |
|---|---|
| Cleanness and visual condition of the heat transfer section; if required, clean unit. | 1 week |
| General radiator and motor conditions. | 1 month |
| Fan visual condition and cleanness; if dirty clean the fans. | 1 month |
| Fixing of the units, fans, fan motors and fan guards. | 1 month |
| When the radiator capacity is stepwise controlled by changing the number of fans, the running order of fans must be changed periodically. | 1 month |
| During stand-stills the fans must be operated for 3-4 hours. | 1 month |
| Vibration level and impeller tip clearance. | 6 month |
| Complete cleaning (coil). | 6-12 months |
| Leak check. | 6 month |
| If motors are provided with grease nipples or without life bearings, normal lubrication period is ~15000 hours. Grease amount and type are given in motor nameplate/motor manual. For greasing procedure please refer to motor manual. | 1 year |

## 7.3 Fan motor maintenance

- Check that all components are properly attached and no damages can be seen.
- If the bearings make a rustling noise, replace the electric motor or its bearings.
- If motors are provided with grease nipples or without life bearings, normal lubrication period is ~15000 hours. Grease amount and type are given in motor nameplate/motor manual. If you use other grease, check the compatibility.
  For greasing procedure please refer to motor manual.
- During standstills (e.g. in winter) run the fans for 3-4 hours at least once a month. It is also recommended to change the fans starting sequence when using the fans for capacity regulation.
- Other components (blade, motor bracket, fan grid) do not require any maintenance.

## 7.4 Fan impeller replacement

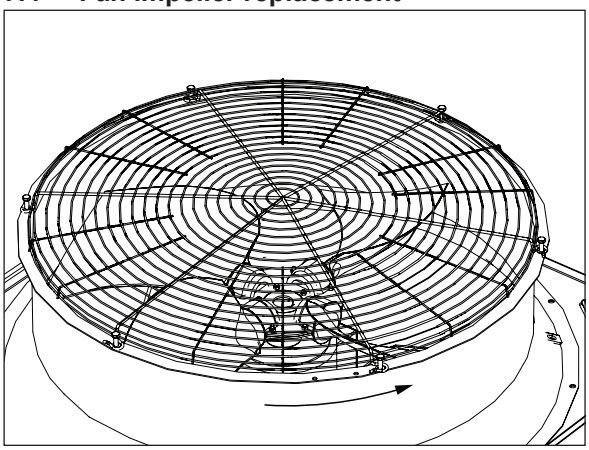

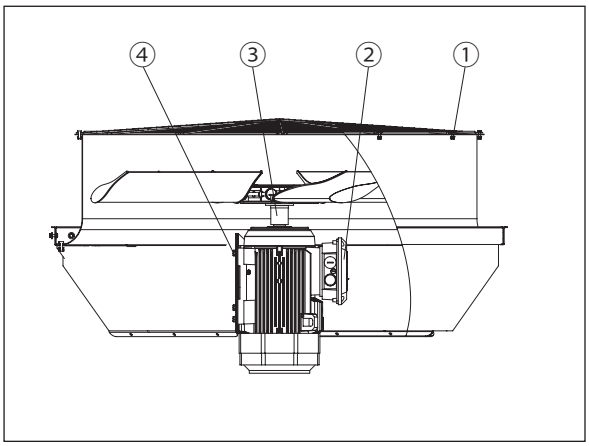


- Remove the fan grid (1) by loosing the screws and rotating it.
- Unscrew the fan impeller locking screw (3) and pull out the fan impeller using an extractor.
- Clean and lubricate the shaft.
- Place the new fan impeller into the shaft (do not forget the wedge). Do not knock the blade into the shaft: the motor bearings easily damage.
- Stroke at the shaft end HI-TEMP 343 RTV silicone rubber sealing spray. Silicone rubber sealing spray prevents the water running along the joint between the blade hub and the motor shaft into the motor.
- Place a washer at the shaft end, on the silicone rubber sealing. Lock the fan impeller hub by a fixing screw into the motor axle. When tightening the fixing screw, some sealing compound presses out through the washer edge and hole. This shows that enough silicone rubber sealing spray has been used.
- Remount the fan grid and tighten fasteners.
- Restore power supply.
- Make a test-run to check the fan correct rotation direction.

## 7.5 Fan motor replacement

Always use spare part motors supplied by Alfa LU-VE to guarantee their applicability to operating conditions.

- Remove the fan impeller (see paragraph "7.4 Fan impeller replacement").
- Open the motor junction box (2) and make sure that the motor is off.
- Remove the electric cable.
- Hold the fan motor with a proper lifting device to avoid it falling inside the unit. Loose its four fixing screws (4).
- Pull out the fan motor.
- Install the new motor following the steps in reverse order.
- Check the minimum blade point gap (3 mm).
- Remount the fan grid and tighten fasteners.
- Restore power supply.
- Make a test-run to check the fan correct rotation direction.

## 7.6 Stepping on the unit

If for maintenance purposes it is required to step on the on the unit, always wear safety shoes. It is not allowed to step on the unit while it is working. Proper protection against falling shall be arranged with railings and safely fixed ladders. If the units do not have railings a safety device that prevents falling shall be used. Never step on the fan grids and on the liquid connections. It is not allowed to step outside the areas highlighted in the example below.

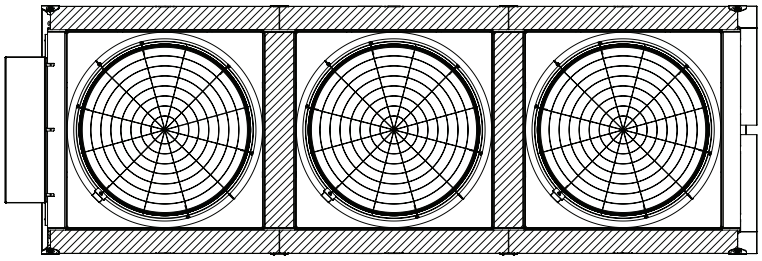

= walkable areas

## 7.7 Tube leakage

The following procedure is to be respected in case of copper tubes.
Repair of tube leakage depends on location of leakage.
Contact Alfa LU-VE in case of stainless steel tubes.

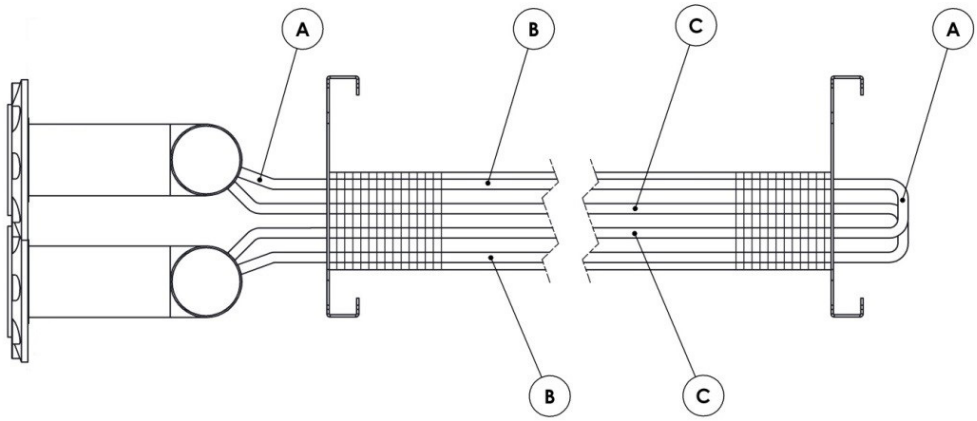


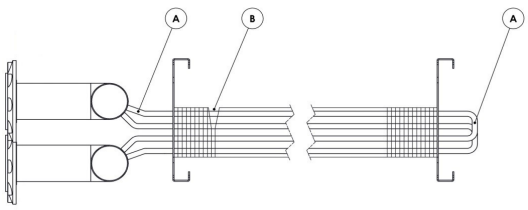


**Leakage in tube bend in connection tube joint (A):**
Change the failed tube bend or connection tube joint.

**Leakage in upper or lower tube row of the coil block (B):**
Move carefully the coil block fins round the leakage and repair the leakage by hard solder.

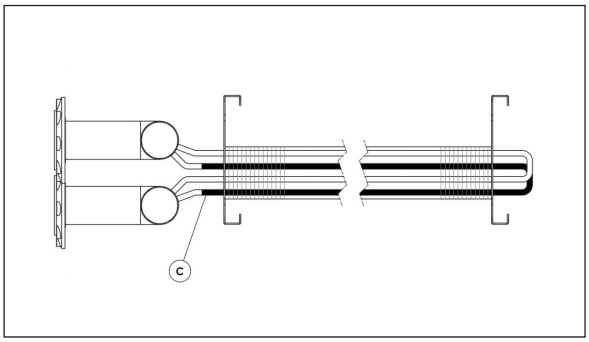


**Leakage in inner tube row of the coil block (C):**
Close the circuit including the leaking tube by closing with hard solder the inlet and outlet tubes on the header.

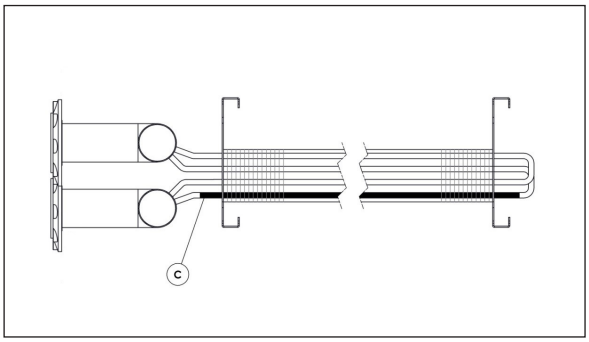


Or repair the leaking tube by using inner tube:
- Expand the original coil tube
- Install the inner tube into leakage point
- Expand the tube ends of the inner tube
- Join by hard solder into the circuit

# 8 Spare parts

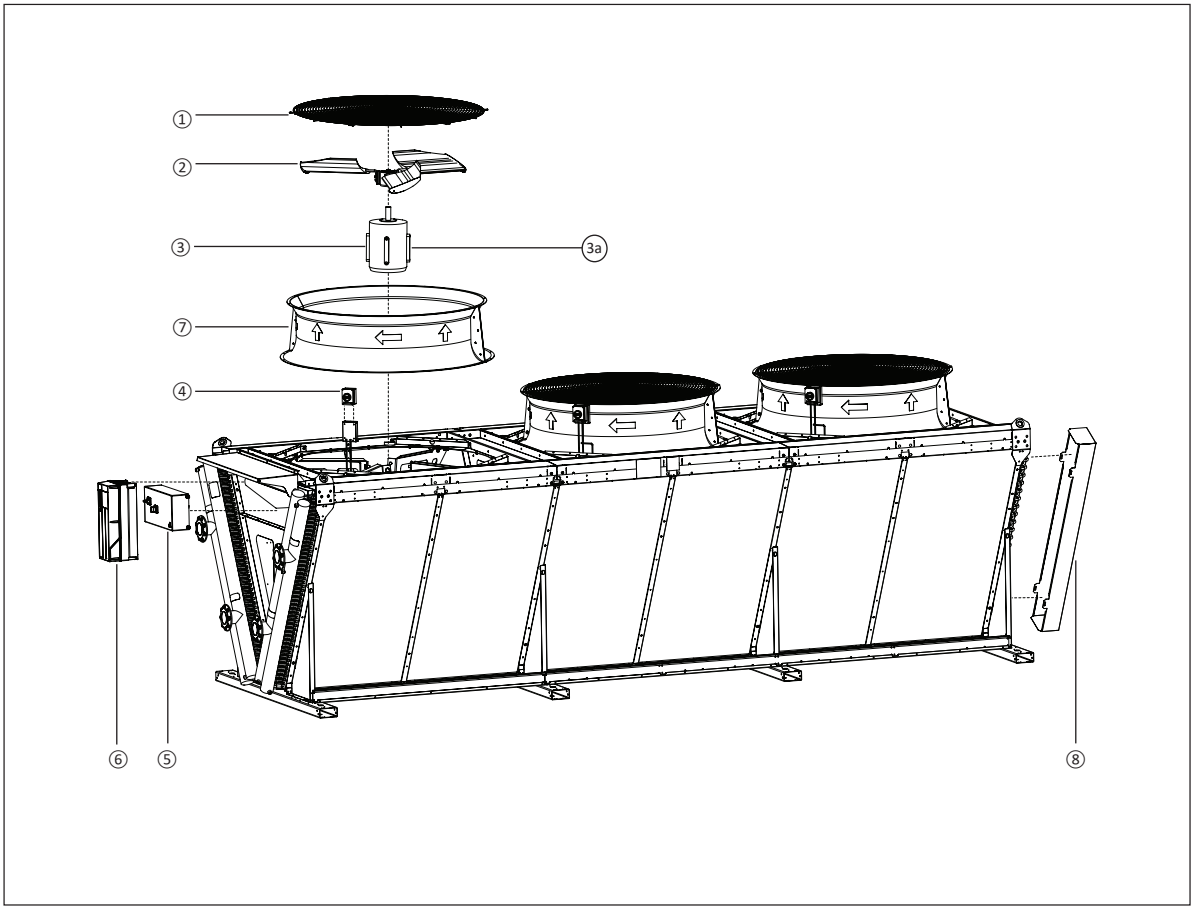


**Spare parts for Alfa-V VLD**

| | |
|---|---|
| 1 | Fan grid |
| 2 | Fan impeller |
| 3 | Fan motor |
| 3a | Ball bearings |
| 4 | Switch on/off |
| 5 | Switchboard |
| 6 | Inverter |
| 7 | Fan collar |
| 8 | Tube bends cover |

Contact your local Alfa LU-VE representative for spare parts order and assistance.

ALFA
LU-VE

alfa.luvegroup.com

LU-VE GROUP
leadership with passion