AlfaTrafo BO

Instruction manual

- Product description
- Product labels
- Transport & lifting
- Installation
- Maintenance
- Spare parts

ORIGINAL INSTRUCTIONS

30370161EN-04

Index

1 Important information

1.1 Disclaimer

This Instruction Manual applies to all AlfaTrafo BO transformer oil coolers and is supplied in combination with the Air Cooled Liquid Coolers Product Manual AHE00050. Both manuals must be carefully examined and instructions should be followed up at all times. Alfa LU-VE does not accept liability for any damage resulting from non-compliance to the instructions as given in the manuals and order-related documents.

1.2 Intended use

Liquid coolers are partly completed machinery according to Machine Directive 2006/42/EC and intended for incorporation in cooling systems.
Declarations of Incorporation are available on alfa.luvegroup.com. Liquid cooler units may not be put into operation until the conformity of the complete machine or cooling system has been declared according to the following standards and directives:

- Pressure Equipment Directive 2014/68/EU
- Machine Directive 2006/42/EC
- Low Voltage Directive 2014/35/EU
- Electrical Equipment of Machines IEC 60204-1
- Electro Magnetic Compatibility 2014/30/EU
- Any applicable local or national legislation

1.3 Where to find product information

Detailed technical data for individual product models are available in order related documents, on the product sticker and in product data sheets. Comprehensive technical information for all Alfa LU-VE air heat exchanger products is available on-line on alfa.luvegroup.com. This includes:

- Product manuals
- Instruction manuals
- Product leaflets & brochures
- Product data sheets (selection software)
- Dimensional drawings
- Electrical wiring diagrams
- Certificates

AlfaTrafo BO

Alfa LU-VE offers world-wide service and support. In case of any questions or uncertainty please contact your local Alfa LU-VE representative.
Contact addresses are available at alfa.luvegroup.com.

2 Product description

2.1 General information and application

The AlfaTrafo BO series is a modular range of heavy-duty OFAF-type (Oil Forced/Air Forced) oil coolers, specifically designed for cooling transformer oil.

- Capacities ΔT ($T_{oil\ in}$- $T_{air\ in}$)=35 °C: 50 up to 600 kW

Oil coolers are designed for on-board installation directly onto the transformer (I) or remote mounting in horizontal (H) or vertical (V) setup.

2.2 Standard configuration

- Finned coil:
  an innovative coil design provides excellent heat transfer. In standard execution oil coolers are fitted with smooth copper or aluminium tubing and industrial fins for reduced fouling and long lasting performance. Available in different fin spacings. Flanged connections available in DN 100 and DN 150, to fit most oil pumps. Manifolds are provided with draining and venting nozzles. Coil corrosion protection is optional.
- Construction:
  frame design and construction provide high rigidity against (seismic) vibration and thermal shock. Casing and framework made of corrosion resistant continuous hot dip galvanized steel. Mounting feet (H/V) manufactured in hot dip galvanized steel. Surface coating protection based on C4-H or C5-H. Finishing available in different RAL color. Casing, supports and frame made of corrosion resistant galvanized steel (C4-H). Separated fan sections and removable fan rings.
- External rotor fan motors:
  with balanced aluminium fan blades, available in three fan diameters (800, 900 & 1000 mm). Available with different noise levels. Standard power supply 400/50/3, other power supplies on request. Protection class IP54 (IP55 on request). Integrated thermo contacts for protection against thermal overload.
- IEC electrical motors:
  directly connected to fan impellers. 900 mm fan diameter and different noise/speed levels available. Different power supplies on request. Protection class IP55.
- Design pressure:
  3 bar at 100 °C
  0.1 Pa admissible vacuum pressure

2.3 Options

- Coil corrosion protection:
  - Epoxy coated aluminium (EP)
  - F-coat (FC)
  - Seawater resistant aluminium AlMg (SWR)
  - Copper
  - Industrial fins
  - E-coat (EC)
- Special fan motors:
  - IP55
  - painted fan motors C4-H/C5-H
  - IEC (with optional space heaters)
- Electrical options:
  - Lockable safety switch (SW)
  - Terminal connection box (CB)
- Coil protection grid/filters (on request)
- Casing with C5-H and/or painted in RAL colour
- Container skid (SK)
- Seaworthy wooden packing box (WB)
- Hinged fan

2.4 Code description

BO	L	Q	IEC	100	2	L	B	Y	36	H	P	7031	SW	-	IF	2.5	CU	Oil
1	2	3	4	5	6	7	8	9	10	11	12	13	14		15	16	17	18

1 AlfaTrafo oil cooler (BO=copper tubing, BOA=aluminium tubing)
2 Module width (S=small,C=compact, M=medium, L=large)
3 Sound level/fan speed (T=high performance, S=standard, M=medium, L=low, Q=quiet, R=dual fan speed)
4 IEC fan motor (blank=external rotor fan, IEC=IEC fan motor)
5 Fan diameter (80=800, 90=910, 100=1000 mm)
6 Number of fans (1 to 4)
7 Coil length (C, M, L)
8 Nr. of tube rows (B, C, D)
9 Electrical connection (Y=star, D=delta)
10 Nr. of circuits
11 Installation (I=on-board, H=airflow vertical, V=airflow horizontal)
12 Transport packing (P=pallet, CR=crate, SK=container skid)
13 Casing finishing (RAL code, C5M, C4)
14 Options
15 Fin material (IF=industrial fins, SWR=seawater resistant AlMg2.5, EP=epoxy coated, FC=F-coated, EC=E-coated, CU=copper)
16 Fin spacing (2.1, 2.3, 2.5, 2.8, 3.0 mm)
17 Tube material (CU=copper, A=aluminium)
18 Operating mode

3 Product labels

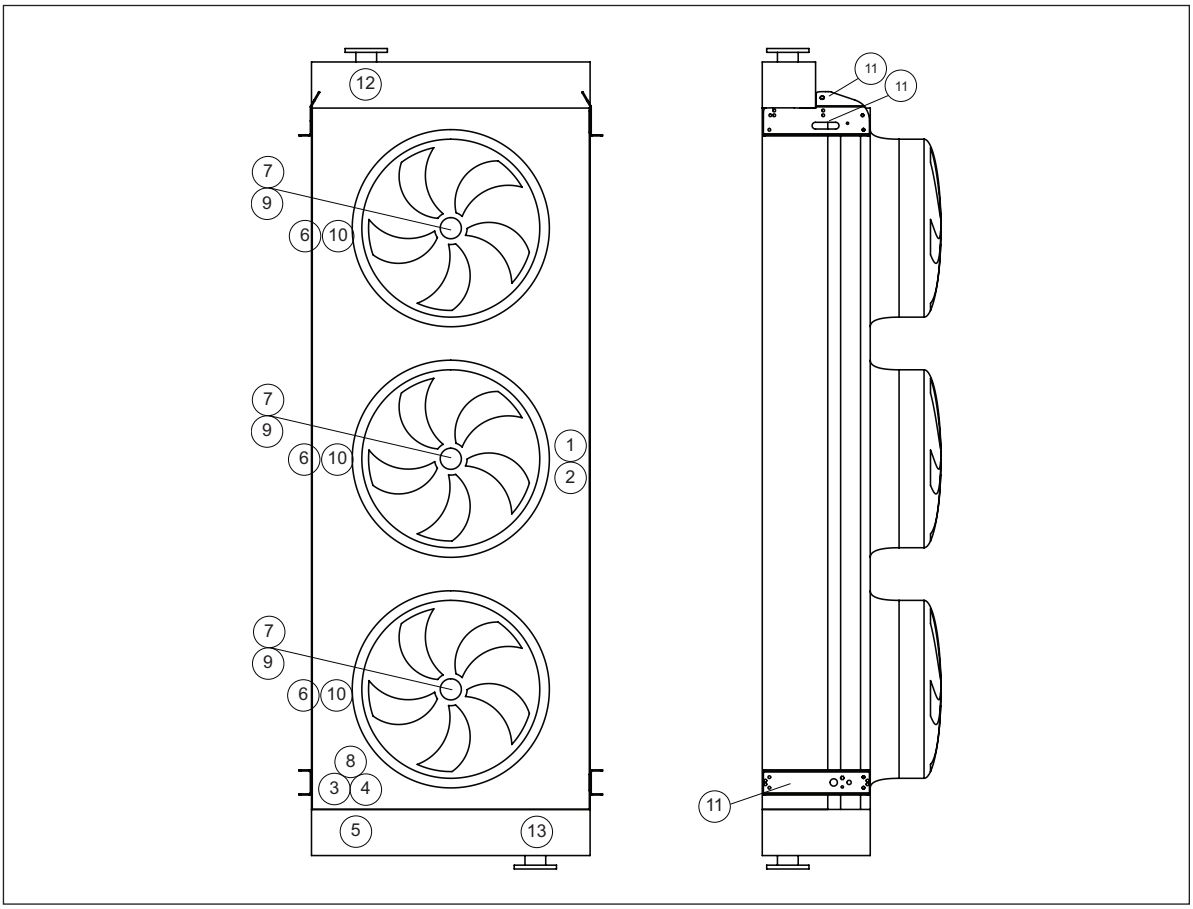

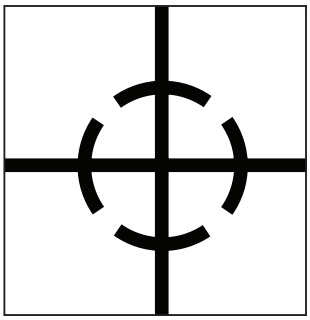

1. Centre of gravity
When lifting the unit using a forklift, always place the forks under the center of gravity.

2. Handle with care
When handling the unit using a forklift, always take maximum care.

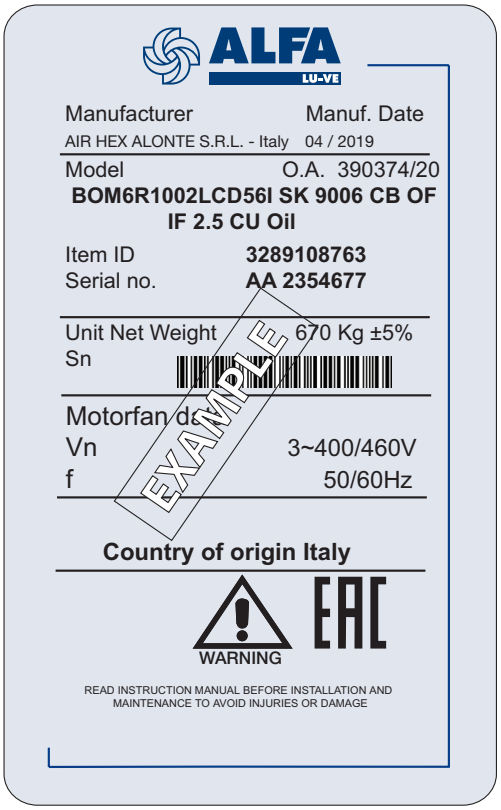

3. Standard product label

Model	Refer to paragraph Code description.
Item ID Serial no.	Communicate these when ordering spare parts as they identify the unit.
O. A.	Order Acknowledgement number.
Unit Net Weight	Check before any lifting operation to ensure that proper lifting tools are used.

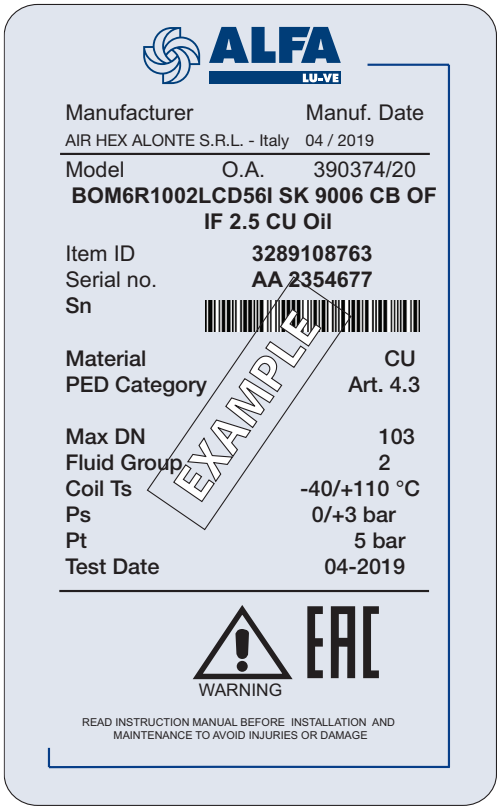

4. Standard product label - coil

Model	Refer to paragraph Code description.
Item ID Serial no.	Communicate these when ordering spare parts as they identify the unit.
Material	Tube material.
Volume	Internal Volume of the coil.
Max DN	Maximum diameter of the distributor tube.
Fluid Group	According to PED.
Coil Ts	Range of operating temperatures for the coil.
Ps	Design pressure.
Pt	Test pressure.
Test date	Date on which the coil has been pressure tested in the factory.

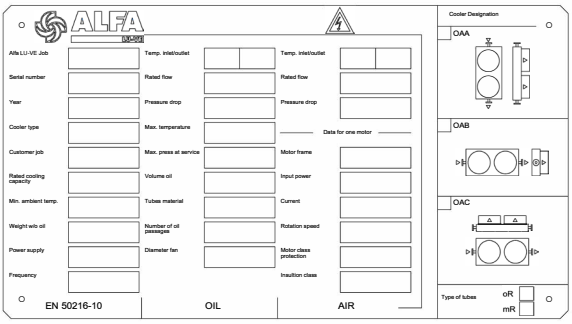

5. Metallic nameplate according to EN 50216
on request it is possible to have a metallic nameplate compliant to EN 50216 instead of the standard plastic product labels 3&4

6. Fan direction
Sticker indicates fan rotation direction.

7. Electrical warning
Electrically powered component. Switch off power supply before any maintenance or installation operation.

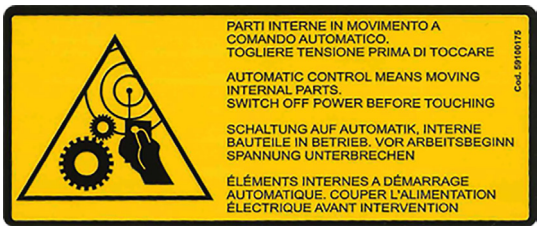

8. Moving parts
Warning: moving parts.
Switch off power supply before any maintenance or installation activities.

9. Fan motor
Fan motor item number.

10. Fan motor number identifier
To help identify each fan motor

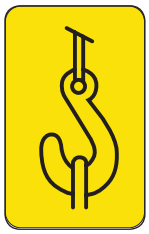

11. Lifting lug
When lifting from above, use lifting lugs as explained in paragraph 4.3.

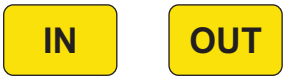

12. & 13. In/Out
Refrigerant connections inlet and outlet.

Grounding
Whenever electrical components supplied by Alfa LU-VE have this sticker, is mandatory to ground them. The yellow/green grounding wire must be left longer than the others, to ensure that it is the last one to be detached from the terminals in the event of the cable being pulled off. Grounding is designed for the electrical equipment supplied with the unit and is not to be intended as protection from external sources.

4 Unloading and lifting

Always follow guidelines and instructions as given in the air cooled liquid coolers product manual AHE00050.
Before lifting the unit, check the weight stated on the name plate, located on the inlet connection side. Verify that the lifting equipment supports at least the unit weight plus 20%. When forklifts are used, forks must be fully inserted under the unit. Unit shall be lifted only when empty.

4.1 Unit delivered by standard truck unloading

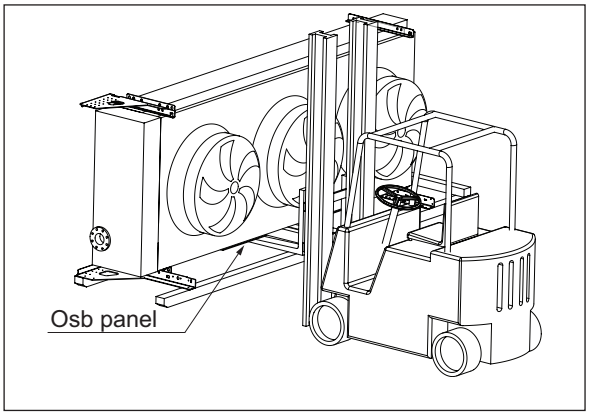

When AlfaTrafo BO oil coolers are delivered on standard trucks the unit should be unloaded from the side of the truck with the use of a forklift as shown in the picture. Forks shall always be positioned under the osb panel to avoid damaging the unit.

4.2 Unit delivered in a container unloading

In case of container delivery, container skid option is recommended in order to facilitate the loading and unloading operations. Follow the procedure below to unload the unit:

- Remove any obstacle to allow the skid sliding out of the container.
- Ensure the container is on an even surface, preferably in concrete.
- A forklift is needed to unload the unit. In order to pull the unit, fix the chain to forklift and the hooks in the skid holes as shown in the picture below.

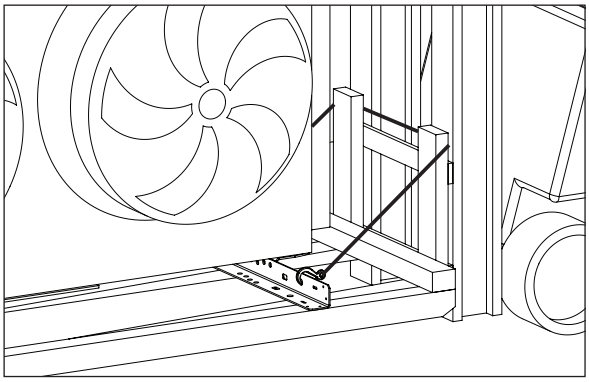

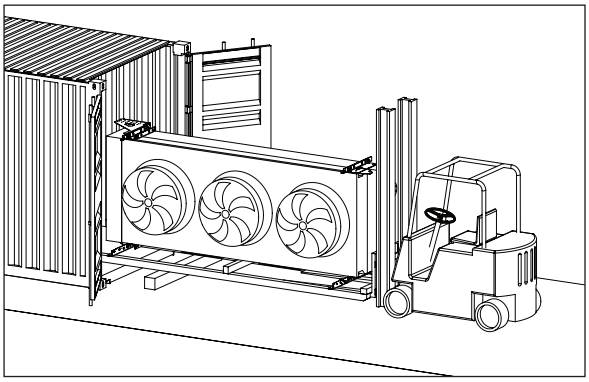

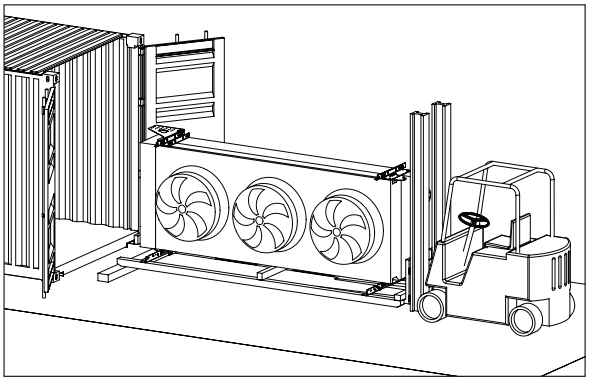

With the forklift, support the unit weight and pull it slowly out of the container taking care of not damaging it against the container's ceiling or wall. If 2 units are shipped in a single container take care not to damage the second one. Pull the unit until the rear skid is close to the opening, but still lies on the container's floor. Place wooden beams (as shown) under the skid for the full width and finish pulling out the unit.

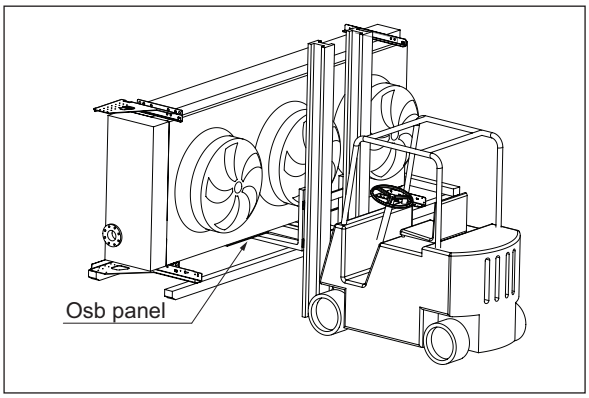

AlfaTrafo BO can now be lifted with a forklift or crane. If a forklift is used, forks shall always be positioned under the osb panel to avoid damaging the unit.

4.3 Lifting from above

Verify that lifting lugs are safely fixed to the unit and have no signs of damage. Attach the belts or hooks only to all the lifting points as shown in the drawings. Angle of chains as shown for all models. Load on the lifting chains shall be equally distributed on all the lifting points. If one chain is not fully loaded another chain will be extra loaded: this is not allowed.

Lifting from shipping position:

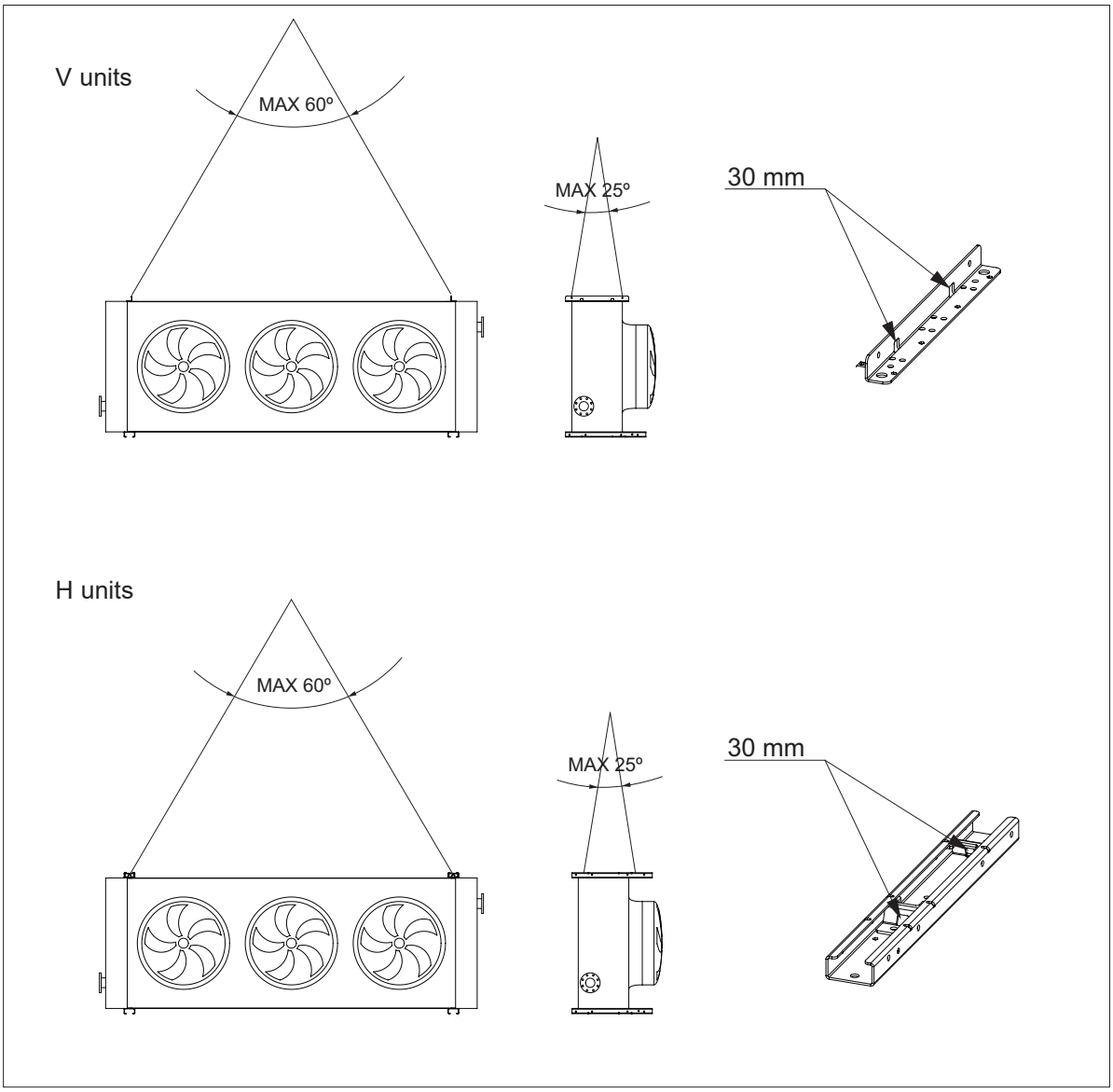

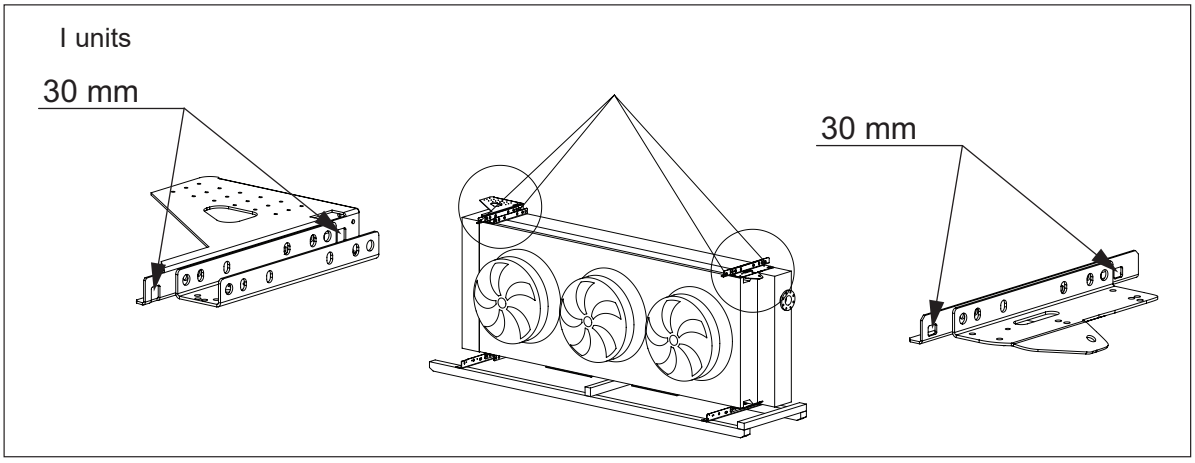

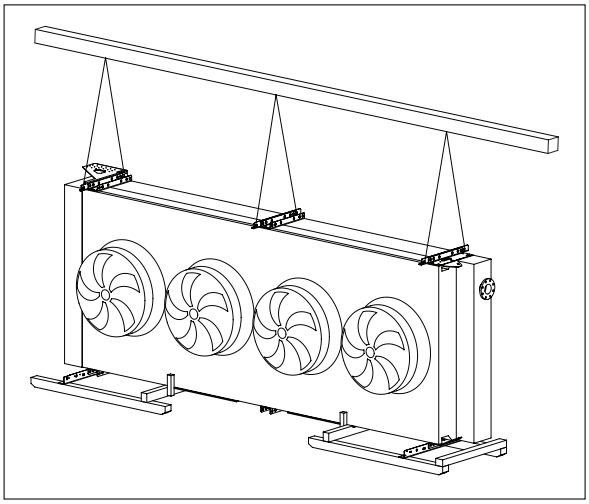

Units with 1 to 3 fans have 4 lifting points, units with 4 modules have 6 lifting points. All lifting points provided must be used anytime the unit is lifted.

Lifting for the units installation:

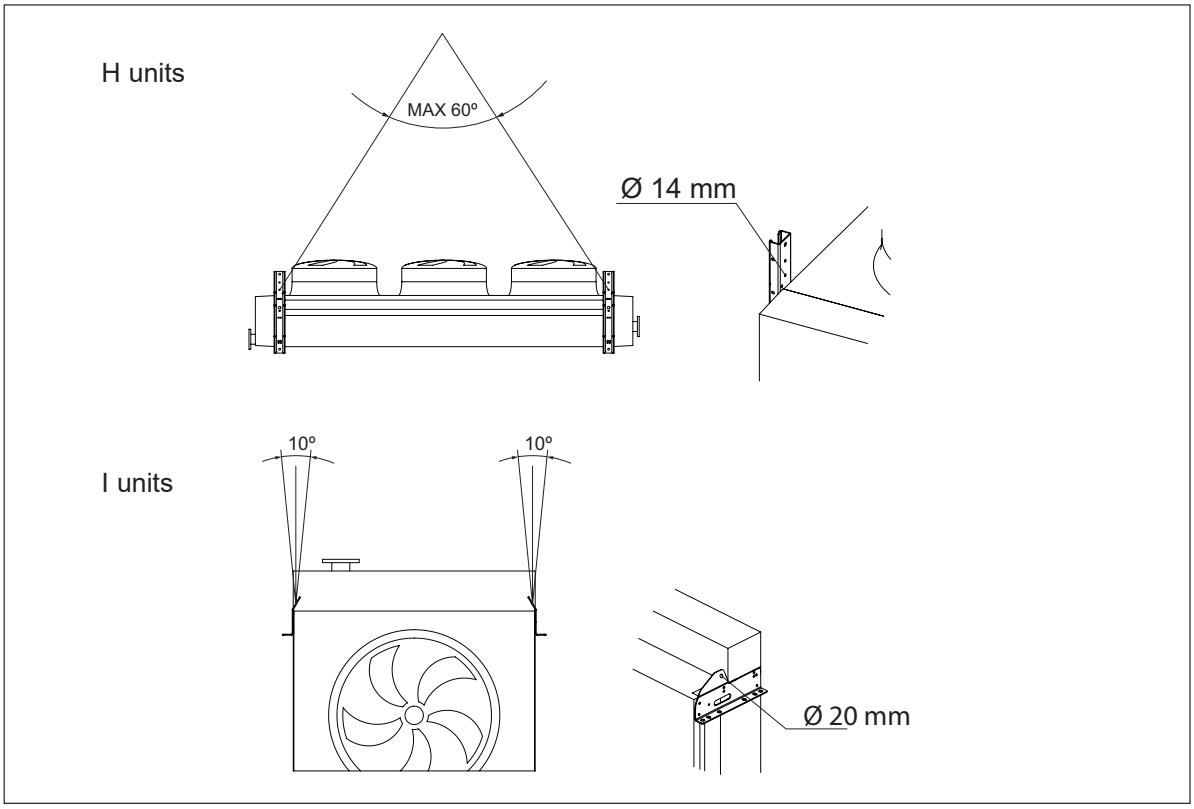

5 Installation

Always follow guidelines and instructions as given in the liquid cooler product manual AHE00050.

The skids and OSB panels are designed to protect the heat exchanger during transport and to facilitate loading and unloading. They must be removed prior installing the unit. If for any reason (e.g. tests) units are unpacked prior to the actual installation the original packaging (including the blinding flanges) must be stored and remounted anytime the unit is shipped.

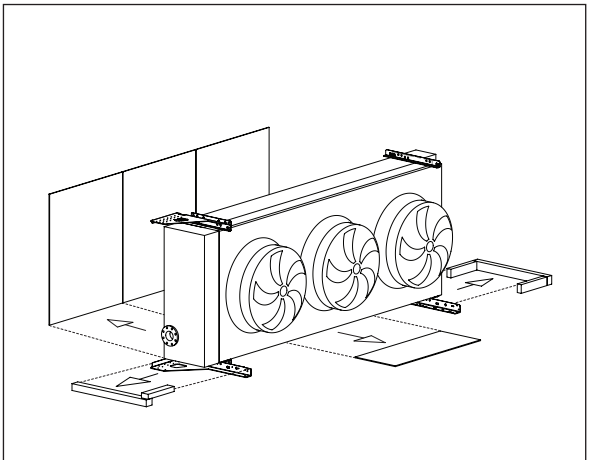

unit delivered by standard truck

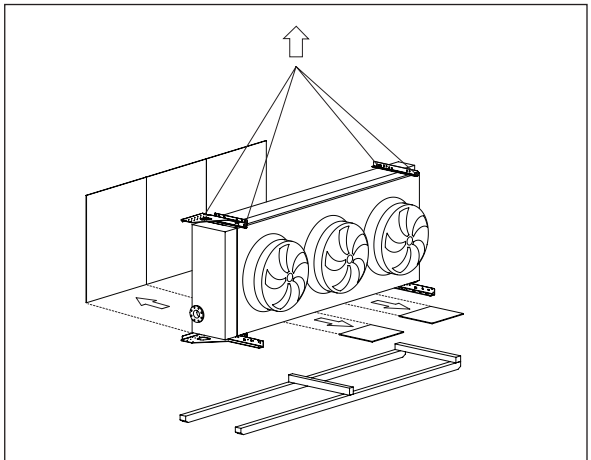

unit delivered in a container

5.1 On-board installation (I models)

On-board units (I) are supplied with dedicated supports for installation. Follow the procedure below for on-board installation.
Gently turn the unit from the vertical shipping position to horizontal position on the ground, using the skid lifting points. Make sure there is nobody in the surrounding area during handling. Ensure the area where the unit will be placed is free from any object.

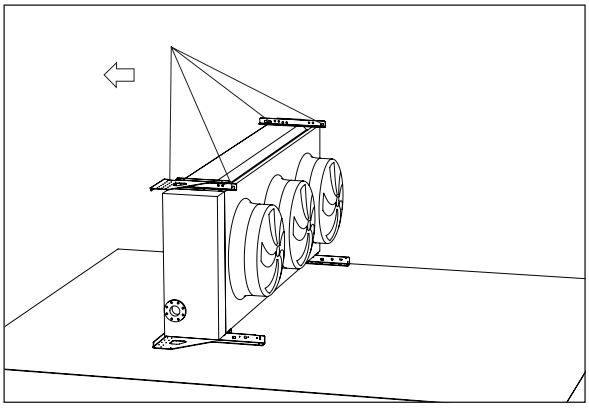

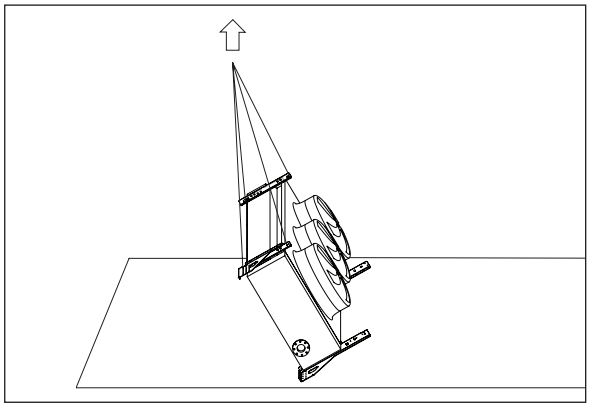

Once the unit is on the ground, lift it using the dedicated eyebolts as shown.

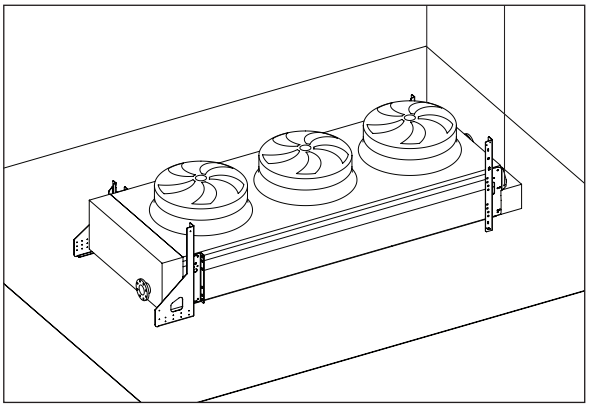

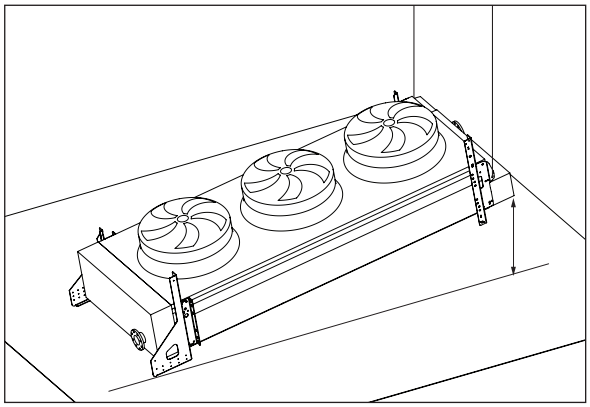

When the distance from the ground is about 300 mm remove the upper skid as shown, taking care of not damaging the heat exchanger. Remove the OSB panel on the coil side of the unit (if not yet done).

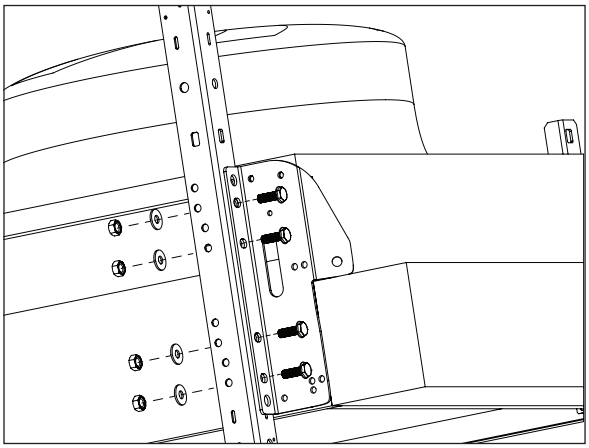

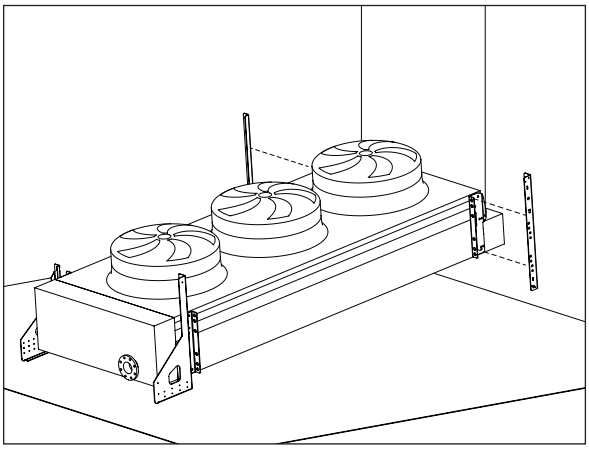

Once the upper skid is removed, lift the unit in vertical position and then a few centimeters above the ground. Remove the lower skids by unscrewing the bolts. Maximum care must be taken not to damage the unit. The heat exchanger is now ready to be installed.

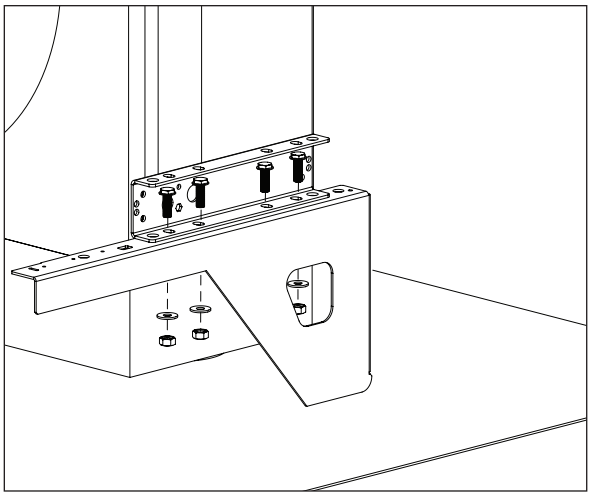

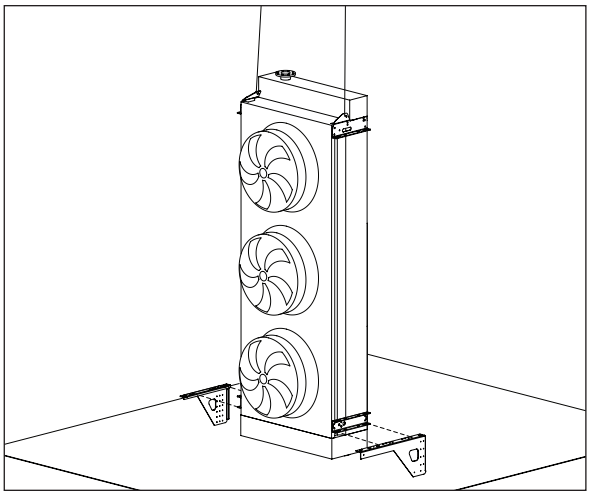

5.2 Vertical installation (V models)

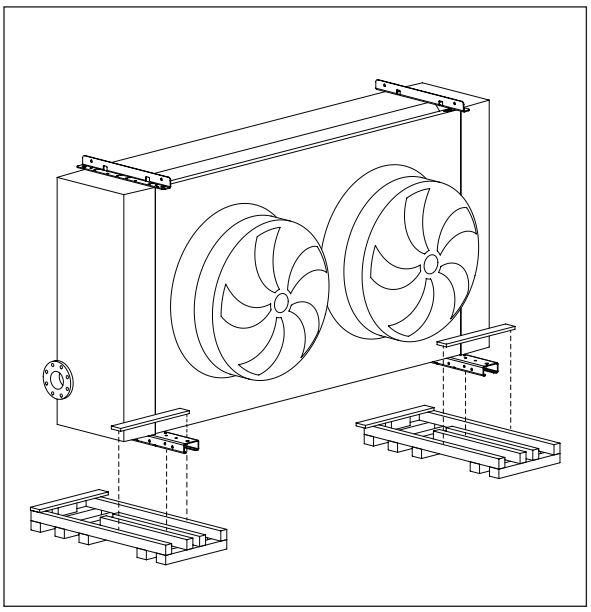

Units are supplied with supports for vertical installation already installed. Remove the pallets, lift and position the unit in the installation area. Fix the unit by means of the holes in the lower stirrups, 1 in the front and 1 in the rear. See dimensional drawings for fixing points details. Remove the OSB panels on the coil side and on the bottom of the heat exchanger (if not yet done).

5.3 Horizontal installation (H models)

Turn the unit from the vertical shipping position to horizontal position on the ground, using the lifting points as shown. Make sure there is nobody in the surrounding area during handling. Ensure the area where the unit will be placed is free from any object.

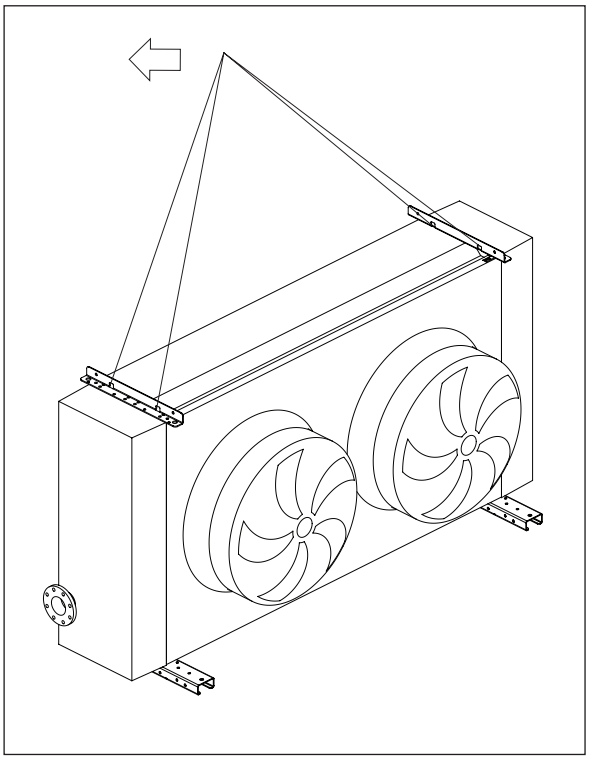

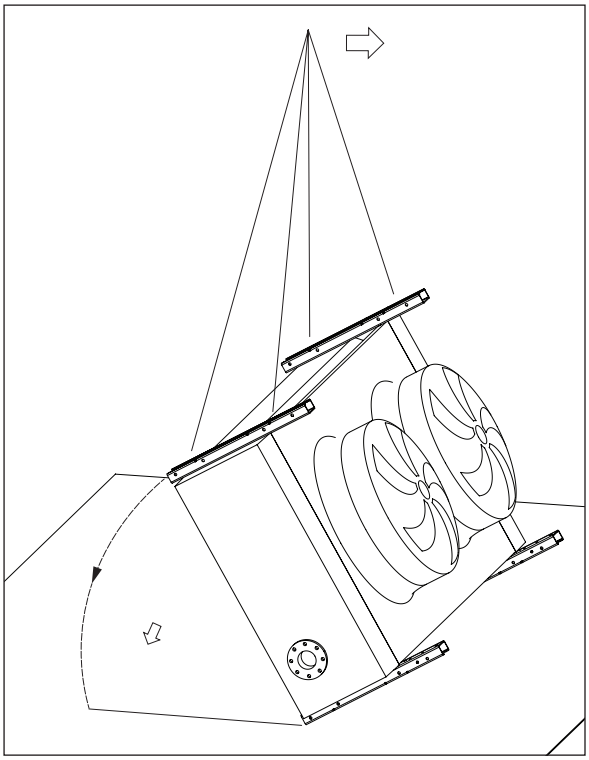

Lift the unit to the installation area. Place the feet included in the Alfa LU-VE support kit on the unit (4 bolts for each feet).

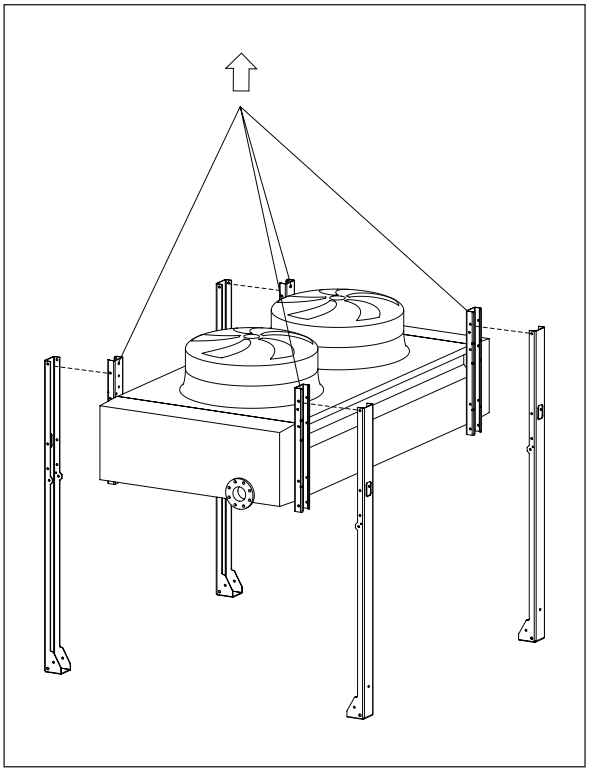

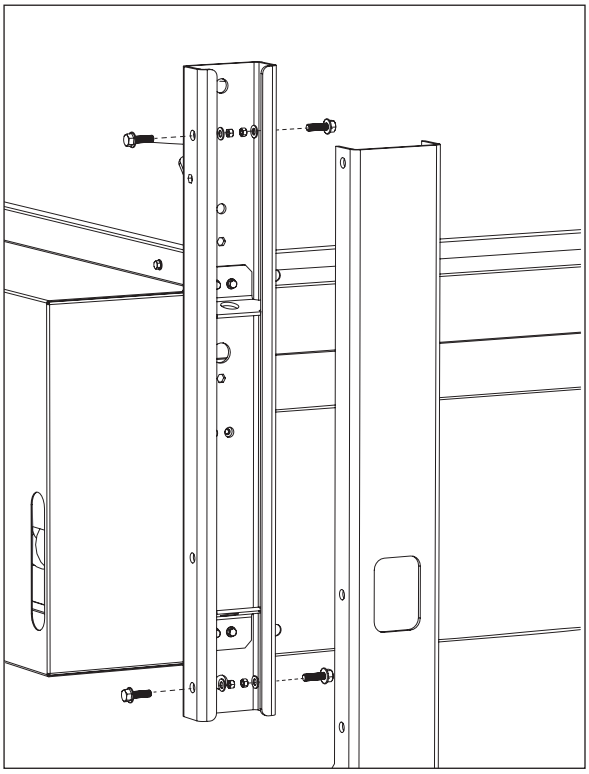

Fix the wind braces and remove the OSB panel (if not yet done) from the coil side of the unit. Place the unit on the ground and fix the feet.

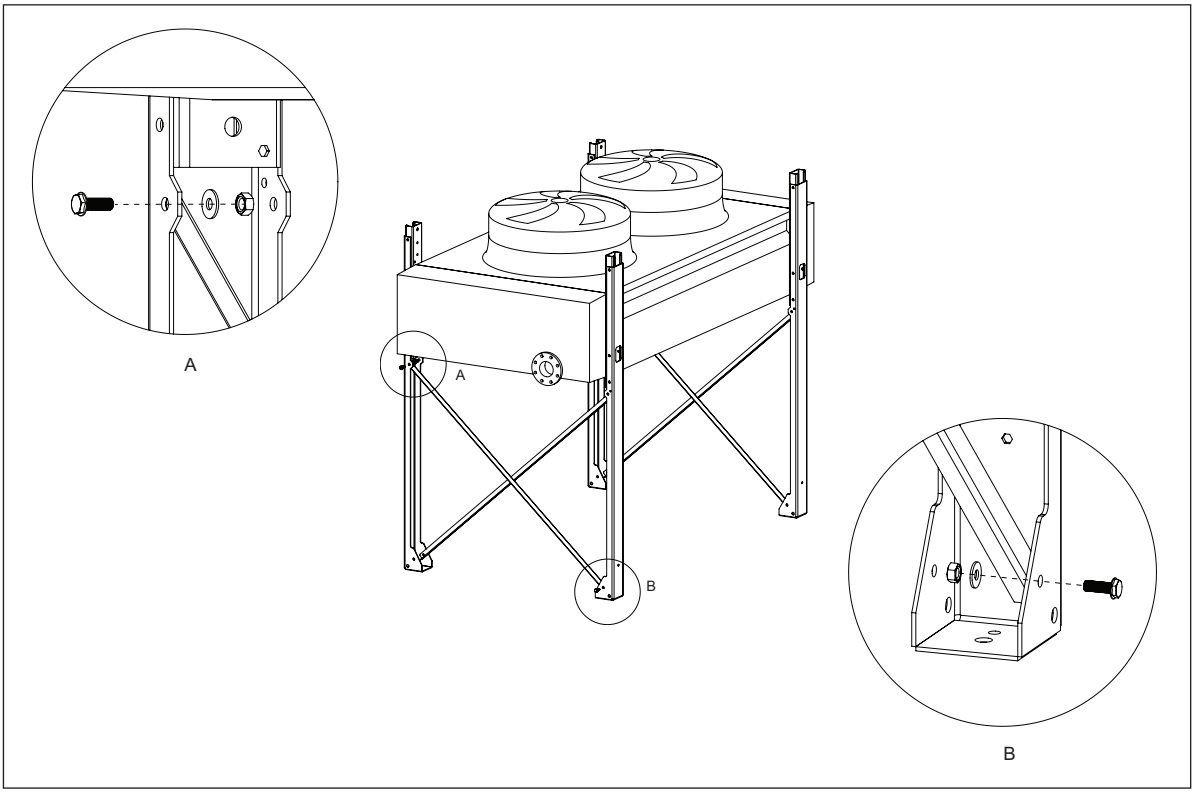

5.4 Dimensional drawings

Detailed drawings showing all required mounting and liquid connection dimensions are available for download on alfa.luvegroup.com.

Dimensional drawings

5.5 Installation layout guideline

Ensure installation is such that the following conditions are met:

- Adequate spacing must be let on the air inlet side of the unit. In case of horizontal installation either use mounting feet kit or ensure that the structure supporting the heat exchanger is at least as high.
- The air discharge side must be free of restrictions.
- Place the unit outdoor, so that it can be monitored and controlled from all sides at all times.
- Verify the structures supporting capacity regarding the weight of the unit(s), including the liquid.
- Ensure that sufficient space is available for maintenance.
- In case of on-board installation refer to the drawings below for minimum technical spaces.

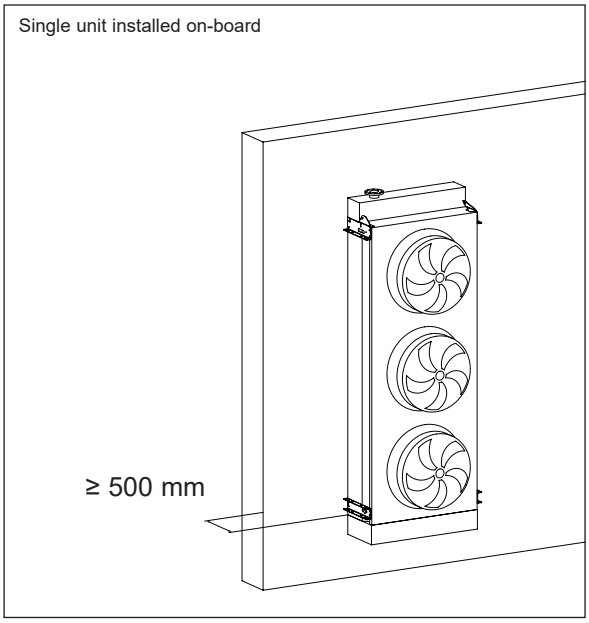

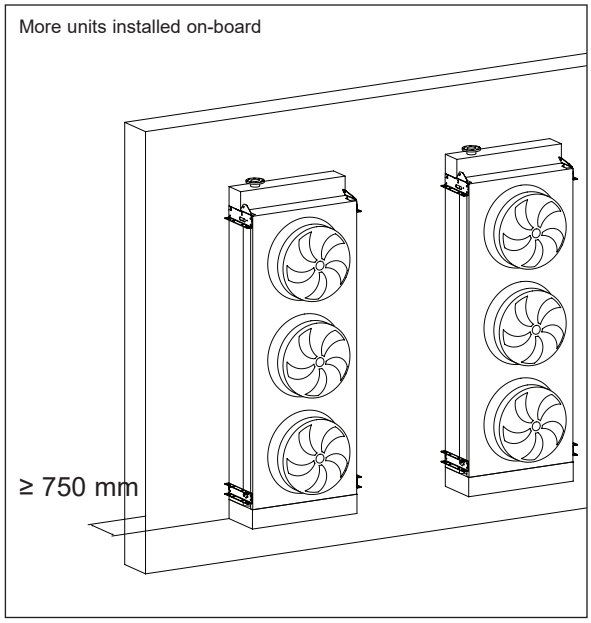

5.6 Expansion joints and vibration dampers

It is mandatory to install proper vibration dampers (out of scope of supply) between the vertical stirrup and the installation frame for active and passive isolation of vibrations and reduction of noise transmission.

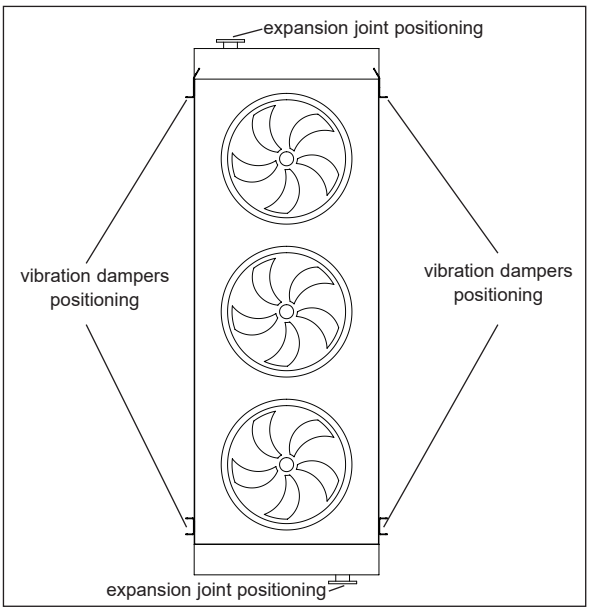

Whenever there are power fluctuations in the electricity grid and when the transformer starts, there is a change in the trafo oil temperature. As a consequence, there is a variation in the tubes temperature which causes a movement due to thermal expansion within the coil. Inlet and outlet connections shall have the possibility to move along the tubes axis for few millimeters. The tube bundle inside Alfa LU-VE transformer oil coolers is supported by a unique system, which allows the tubes to move freely, thus preventing mechanical damages. In order to avoid oil leaks, it is mandatory to install an appropriate expansion joint (out of scope of supply) between piping and both inlet and outlet flanges for proper operation of the floating manifold system.
The picture example refers to on-board installation but the prescriptions are extended also to H and V installations.

5.7 Piping connections

Standard units are delivered with PN 16 DIN flanged connections, with DN 100 or 150 mm.

- The pipes' sizes should be in accordance with the IN and OUT connection's diameter of the coil
- The piping system must not transfer any forces to the heat exchanger, included those due to its weight or thermal expansion.
- All the threads should be properly covered to ensure tightness.

DN (mm)	PN (bar)	Suggested tightening (Nm)
100	10/16	80
150	10/16	80

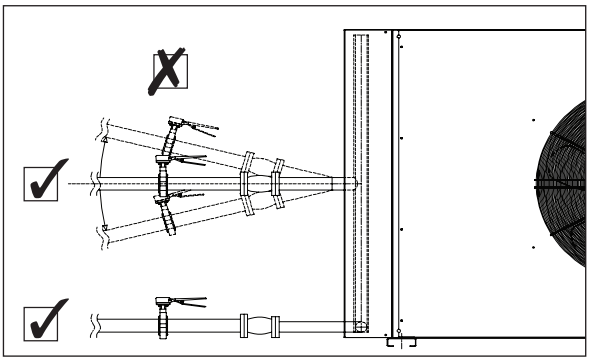

Piping has to be arranged by the installer. Remove protective blind flanges before installation. Carefully check the alignment of the piping with the inlet and outlet connections of the heat exchanger. Never bend connections.

5.8 Electrical installation

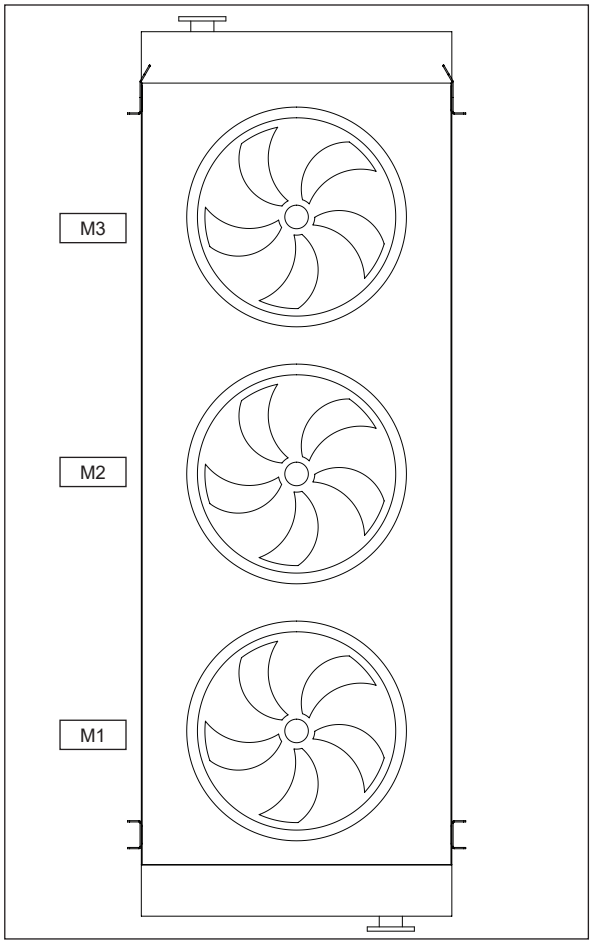

Electrical motors layout, with numbering as shown (stickers/metallic plates help to identify them on site).

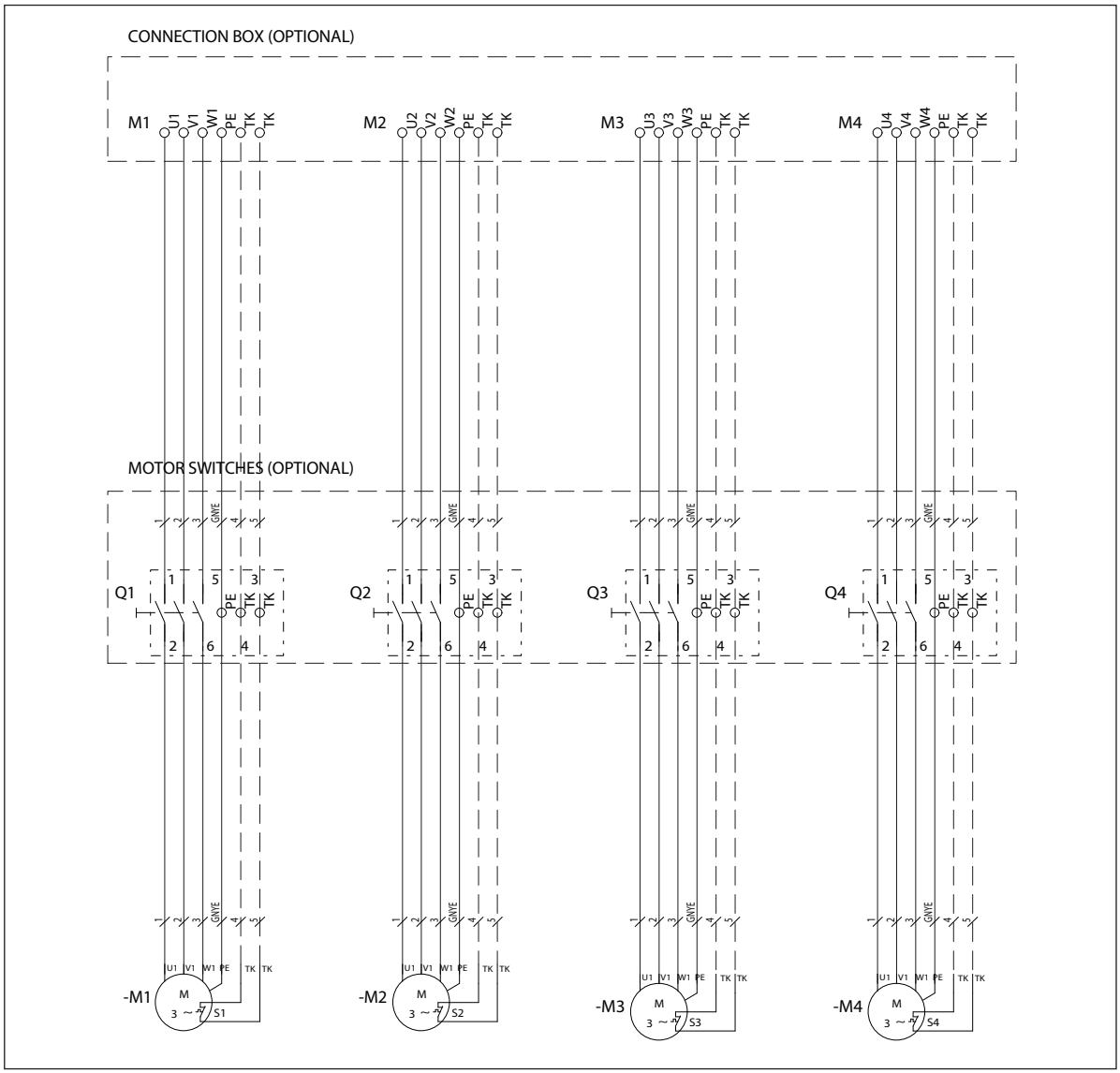

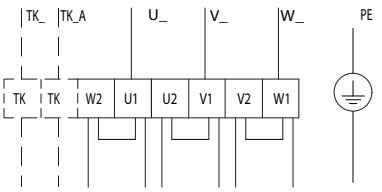

MOTOR DELTA CONNECTION DIAGRAM

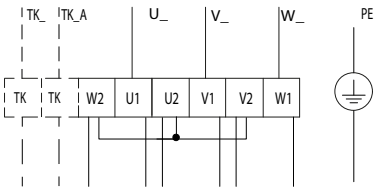

MOTOR STAR CONNECTION DIAGRAM

Electrical drawing above shows default electrical components layout. Fan motor switches (Q1, Q2, Q3, Q4) are optional. On request the connection box can be supplied with terminals ready for pump and/or flow indicator connection. The temperature monitor devices (if present) must be integrated in control circuit. They open power supply circuit if a fault occours and avoid power on after the motor has cooled down.

Electrical connection diagrams are available for download on alfa.luvegroup.com. When in doubt always contact your local Alfa LU-VE representative for assistance.

Electrical connections

6 Operation

Always follow guidelines and instructions as given in the air cooled liquid coolers product manual AHE00050.

6.1 Start-up procedure

Follow the start-up procedures whenever the equipment is started up.

- Check that all the fastening screws are perfectly tightened.
- Open the unit vent plug and then start the oil feeding.
- When all air has been discharged from the liquid circuit, close the unit vent plug.
- Verify that there are no leaks neither in the heat exchanger nor in the circuit.
- Once the equipment is filled with oil, start the fan(s) and verify proper fan rotation direction as indicated in the stickers.
- After some operating time check the absence of air in the liquid circuit (vent if needed).

6.2 Shutdown

If the unit requires emptying for maintenance or system shutdown, proceed as follows:

- Stop oil supply and switch off electrical power supply.
- Make sure neither liquid nor power supply could be resumed accidentally or unexpectedly.
- Install a proper hose at the drain valves. Open venting and draining valves. Attention: oil might be hot.
- Make sure all drained oil is collected in a suitable vessel.
- Compressed air helps draining. Compressed air shall be contaminant-free.
- Evacuate the coil to remove any residual of oil.

7 Maintenance

Always follow guidelines and instructions as given in product manual AHE00050.
Always disconnect power supply before performing any maintenance activity. Never walk or step over the unit.

7.1 Cleaning

A coil block should be kept clean to guarantee it works well. Cleaning is recommended every three months, but this frequency should be defined according to the environment where the equipment is installed. The fin pack can be cleaned in different ways, according to the dirty amount using low pressure compressed air or a jet of water (2 ÷ 100 bar) directed inverse to the air flow and perpendicular to the coil to prevent bending or damaging of the fins. If fins are bent, they can be straightened using the repairing tool (comb). Care must be taken not to direct the water jet directly onto fan motors or electric control panels.

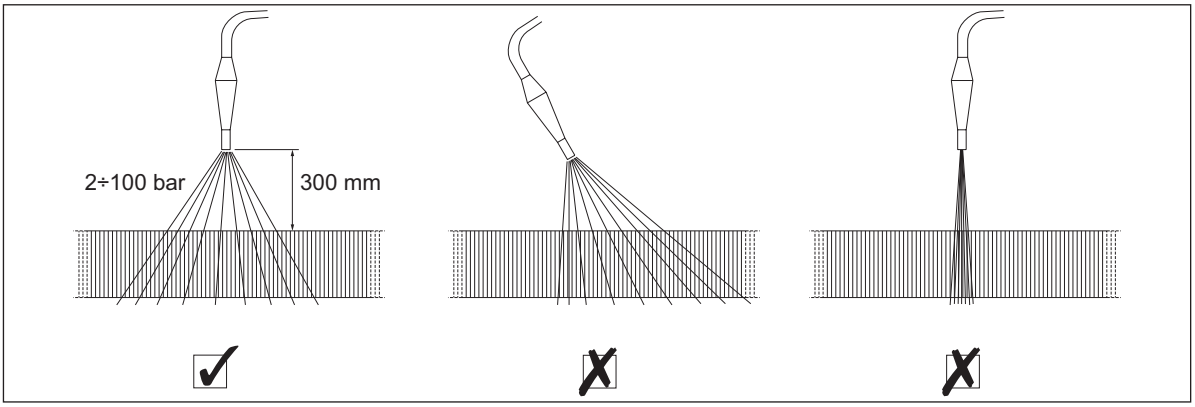

7.2 External rotor fan-motor package replacement

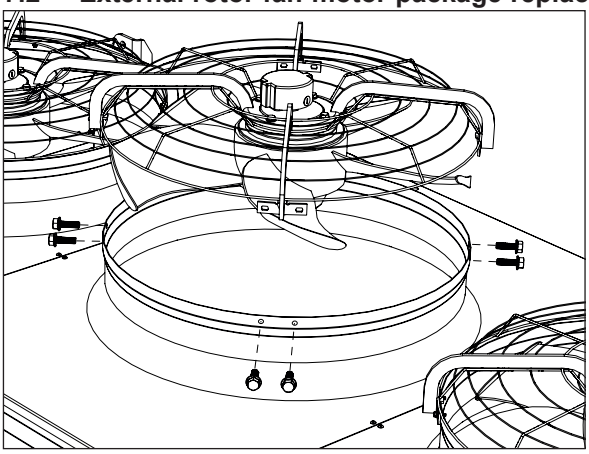

Disconnect power supply before performing any maintenance activities on fans and fan motors. Disconnect fan cabling. Unscrew fixing bolts and remove old fan (example drawing, layout might be different). Mount new fan motor in identical position. Use an anti-corrosion compound when remounting the fixing bolts. Restore electrical connections when new fan has been mounted.

7.3 IEC fan blade replacement (optional)

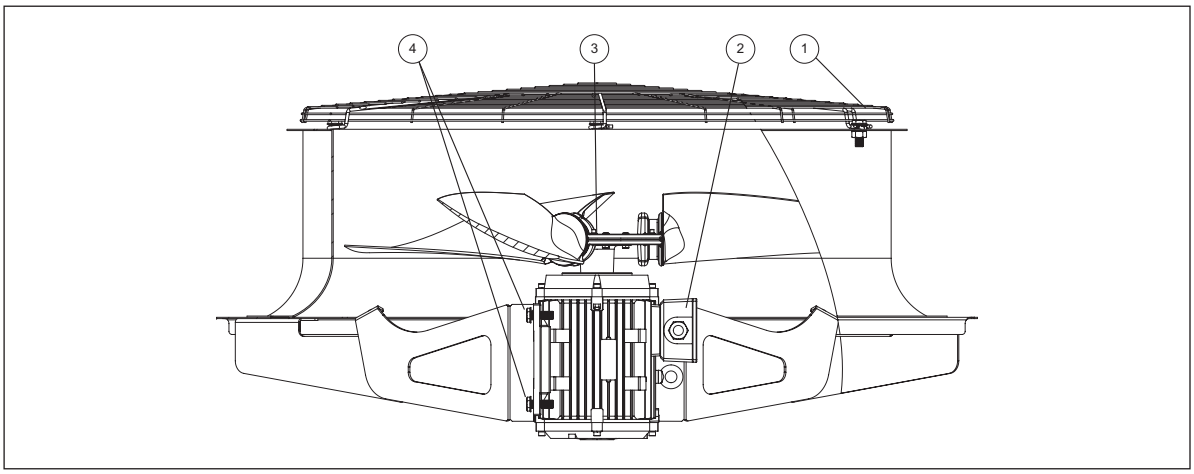

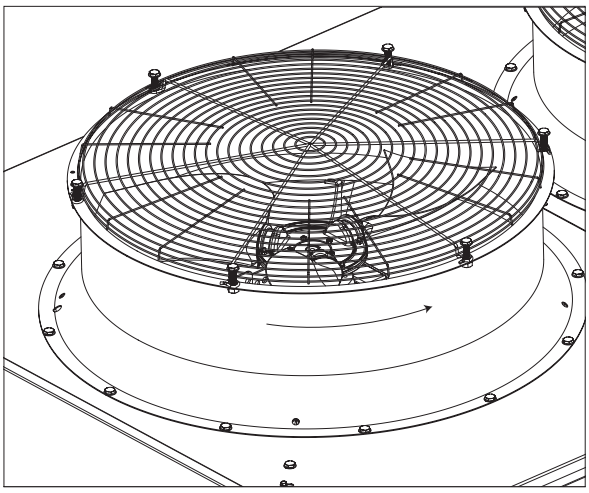

- Ensure complete electrical isolation.
- Remove the fan guard ① by slightly loosing the screws and rotating it.
- Unscrew the fan blade locking screw ③ and pull out the fan blade using an extractor.
- Clean and lubricate the shaft.
- Place the new blade into the shaft (do not forget the wedge!). Do not knock the blade into the shaft: the motor bearings easily damage!.
- Stroke at the shaft end HI-TEMP 343 RTV silicone rubber sealing spray. Silicone rubber sealing spray prevents the water running along the joint between the blade hub and the motor shaft into the motor.
- Place a washer at the shaft end, on the silicone rubber sealing. Lock the blade hub by a fixing screw into the motor axle. When tightening the fixing screw, some sealing compound presses out through the washer edge and hole. This shows that enough silicone rubber sealing spray has been used.
- Remount the fan guard and tighten fasteners.
- Restore power supply.
- Make a test-run for the fan and check the fan visually.

7.4 IEC fan motor replacement

Always use spare part motors supplied by Alfa LU-VE to guarantee their applicability to operating conditions.

- Ensure complete electrical isolation.
- Remove the fan blade (see paragraph 3.3 fan blade replacement).
- Open the motor junction box ② and make sure that the motor is dead.
- Remove the electric cable.
- Hold the fan motor with a proper lifting device to avod it falling inside the unit. Loose its four fixing screws ④.
- Pull out the fan motor.
- Install the new motor following the steps in reverse order.
- Check the minimum blade point gap: it is 3 mm.
- Remount the fan guard and tighten fasteners. After installation make a test-run to check the fan correct rotation direction and its function in general.

7.5 Header box (only for BOA models)

Tightening of the header boxes to the tube plate must be checked during installation and then every 2 years.

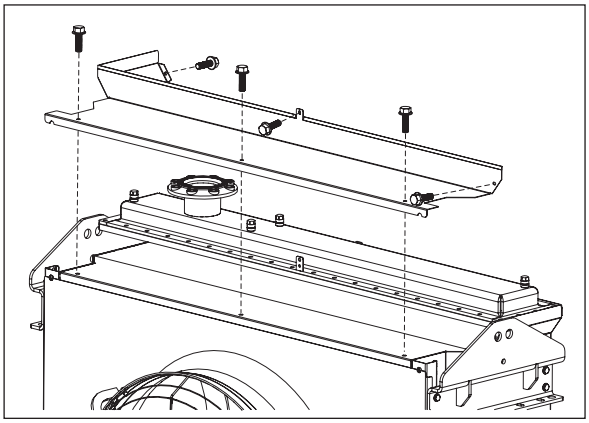

To access the header box nuts covers must be removed. Unscrew the bolts highlighted and remove the upper cover.

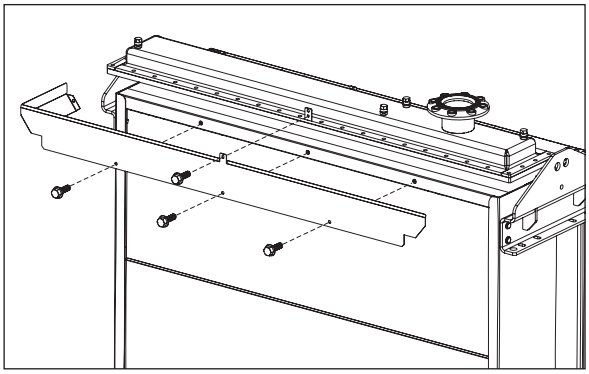

Unscrew the bolts highlighted and remove the lower cover.

Tighten the bolts connecting the header box to the tube plate (recommended torque is 50 Nm.) Tighten the bolts crossing, not sequentially, according to the sequence shown for each module width.

Module width S

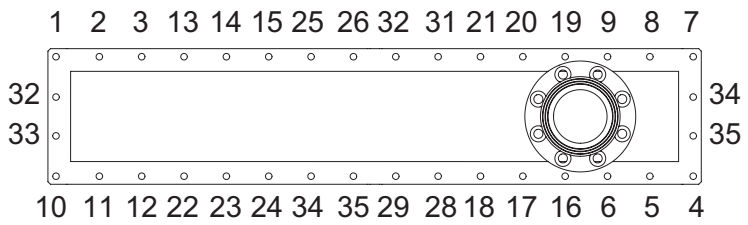

Module width C

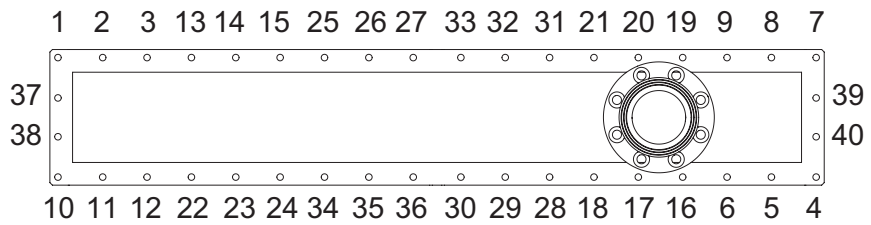

Module width M

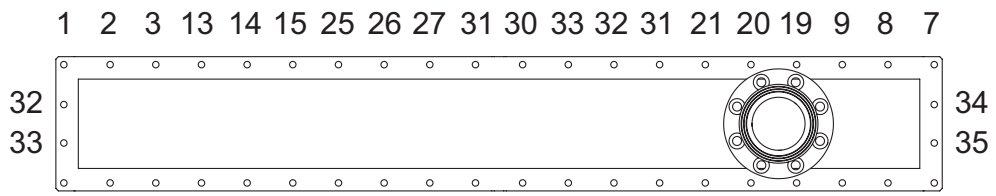

Module width L

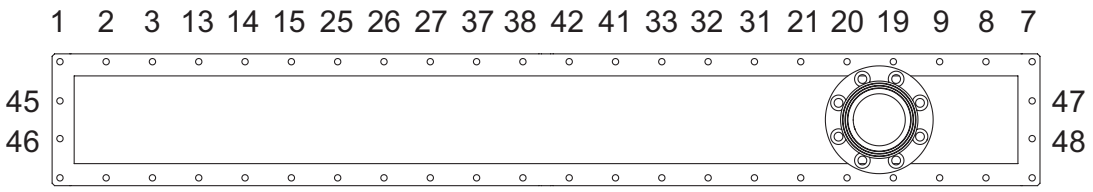

If the connection header is opened for any reason (e.g. inspection, cleaning, etc.) we recommend the replacement of the O-ring gasket. Always use O-ring gaskets from Alfa LU-VE to ensure compatibility with operating conditions and the cooler model. Clean the tube plate to remove old gasket debris and oil traces. Glue the gasket on the header using Loctite. Follow the steps above for tightening (in particular torque and sequence), taking maximum care of not damaging the gasket.

8 Spare parts

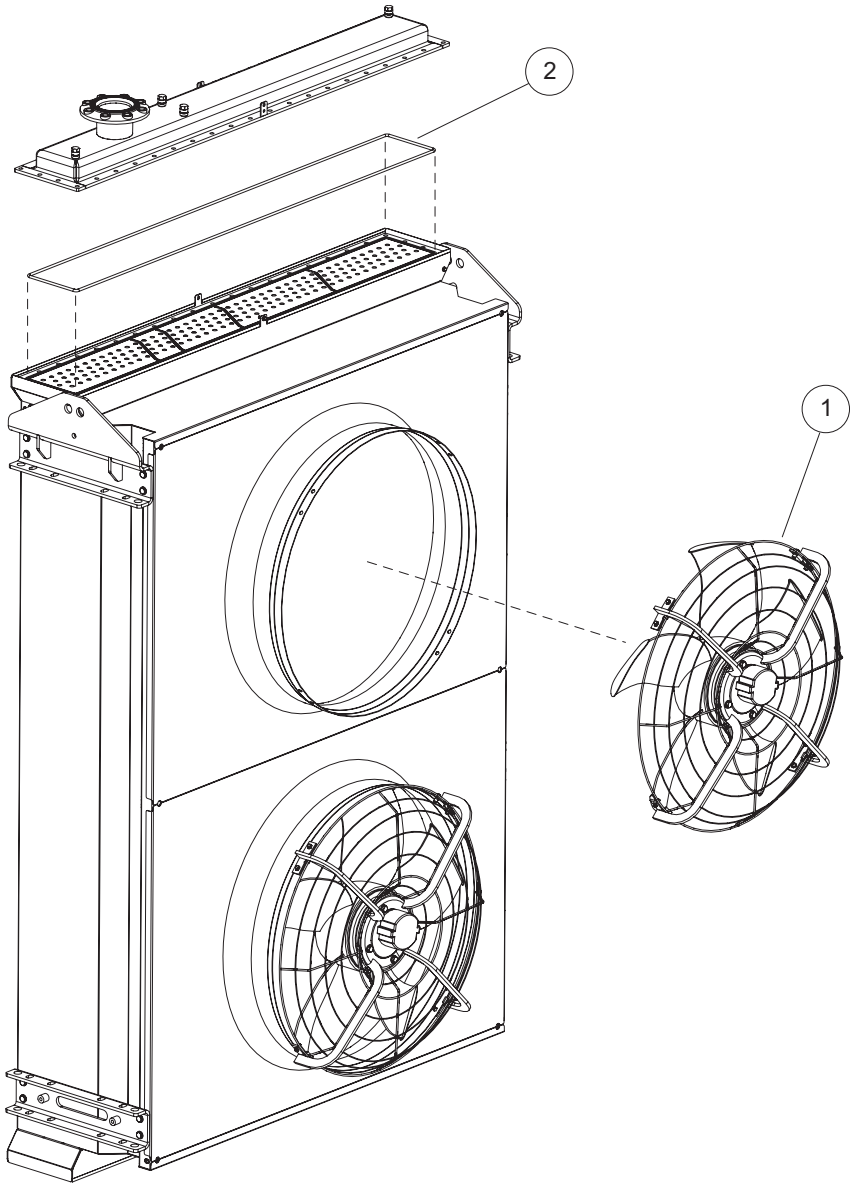

Spare parts for AlfaTrafo BO

1	External rotor fan
2	Header box gasket (only for BOA models)
3	Fins repair comb kit

Contact your local Alfa LU-VE representative for spare parts order and assistance.

ALFA LU-VE

alfa.luvegroup.com