Optigo PF27MC

Cubic commercial air coolers for A3 refrigerants

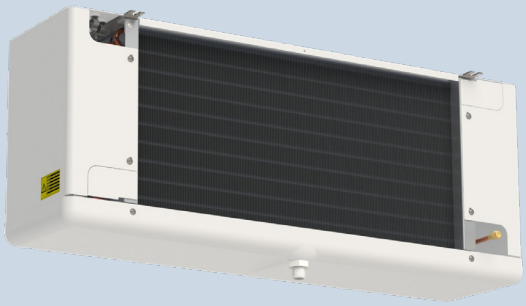

A3 safety compliant

Benefits

- Designed for safe operation with A3 refrigerants
- Compact size for efficient use of cold room space
- Energy efficient EC fans
- Easy installation & maintenance
- Two-year product guarantee
- Easy access to on-line product information

General information & application

Optigo PF27MC are cubic commercial air coolers suitable for the safe use of A3 refrigerants, such as R290 (propane).

General application for Optigo PF27MC are in small to medium-sized cooling rooms.

Refrigerants	HFC A1, A2L, A3
Capacity (SC2 with R404)	1.07 up to 6.9 kW
Capacity (DT1* with R290)	1.04 up to 9.01 kW
Air flow	900 up to 10,400 m³/h
Min. room temperature	- 25 °C

* T_{air} = 2.5 °C, T_{evap} = - 7.5 °C

Coil

High-efficiency coil manufactured from internally grooved Cu tubes and louvered aluminium fins. Standard fin spacing: 4.5, 6, 7 mm.

Casing

Durable galvanized steel casing, powder coated RAL 9003. Dismountable and openable casing for cleaning and inspecting purposes.

Fan motors

Optigo PF27MC coolers are available with 1 to 4 fans fitted with high efficiency single speed Ø 275 mm EC fan motors drawing through the coil. Power supply 230/50/1. Fan motors are wired to a central connection box.

Type	Power supply	Ø mm	Nominal power W (x fan)	Nominal current A (x fan)
EC	1~230 V - 50/60 Hz	275	28	0.2

Optigo P27FMC

Optigo PF27MC

Cubic commercial air coolers for A3 refrigerants

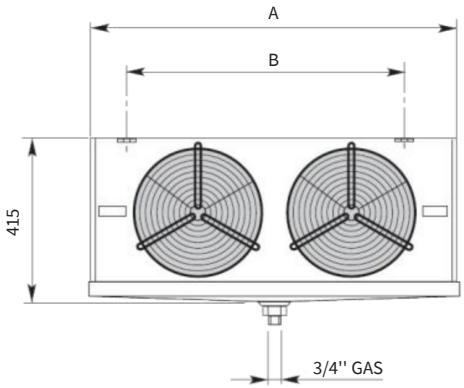

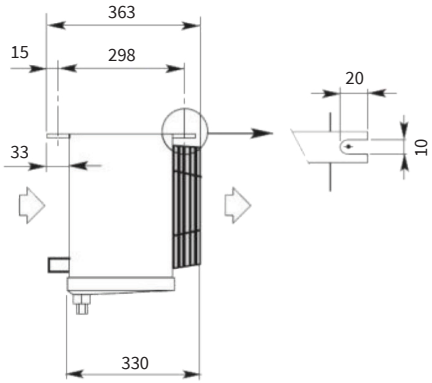

Dimensions

Model	n. of fans	Dimensions (mm)	
		A	B
PF27MC	1	678	412
PF27MC	2	1048	782
PF27MC	3	1418	1152
PF27MC	4	1788	1522

Options

- Driptray heater (HD)
- Electric defrost in coil + driptray heater (E+HD) only for 7 mm fin spacing models
- Coil protection: Alupaint (AP)
- Driptray insulation (IS)

Design pressure

Design pressure: 24 bar. Each heat exchanger is leak tested with dry air and finally supplied with a dry air pre-charge.

Selection

Selection and pricing is to be performed with our online air heat exchanger selection software Plair.
Selection output includes all relevant technical data and dimensional drawings.

Certifications

The Alfa LU-VE quality system is in accordance with ISO 9001. All products are manufactured according to PED regulations.

The Optigo PF27MC series machines use the same heat exchange components as the corresponding Optigo FMC series models and provide the same performance. The Optigo P27FMC series machines can work with HFC category A1 refrigerants.

LU-VE Group participates in the ECP program for HE. Check ongoing validity of certificate:
www.eurovent-certification.com

Code description

PF27MC	-	2	1	-	4	N	AL	BP	-	*
1		2	3		4	5	6	7		8

1 Optigo PF27MC A3 safety compliant cubic commercial unit coolers (Ø 275 mm)
2 Number of fans (1 to 4)
3 Coil type (1, 2)
4 Fin spacing (4=4.5, 6=6.0, 7=7.0)
5 Defrost system (N=air defrost, HD=driptray heater, E+HD=electric defrost in coil + driptray heater)
6 Fin material (AL=aluminium, AP=pre-painted aluminium)
7 Packing (BP=box + pallet)
8 Options

31574443EN-00

Alfa LU-VE is a trademark registered and owned by LU-VE Group.
Alfa LU-VE reserves the right to change specifications without prior notification.