Optigo F45CC - F50CC

Cubic light industrial air coolers

Instruction manual

ORIGINAL INSTRUCTIONS

31671288EN-02

Index

1 Important information

1.1 Disclaimer

This Instruction Manual applies to all Optigo F45CC and F50CC cubic light industrial air cooler products. Manual must be carefully examined and instructions should be followed up at all times. Alfa LU-VE does not accept liability for any damage resulting from failure to comply with or incomplete compliance with the instructions as given in the manuals and order-related documents. As the heat exchanger is supplied indirectly, the producer is not acquainted with its actual application.

1.2 Safety precautions

Do not modify the unit by removing any of the safety guards or by-passing any of the safety devices. All work on the equipment must be carried out by trained personnel.
For handling, installing and maintenance operations it is essential to comply as follows:

- Employ authorized personnel only.
- Wear protective gloves.
- Overhead loads: never stand or walk below the loads.

All on-site electrical connection are the responsibility of the installer. For electrical wiring operations it is essential to comply as follows:

- Employ authorized personnel only.
- Make sure the power line circuit is open.
- Installation of a main switch is mandatory and is the responsibility of the installer.
- The main switch on the general power panel is open and padlocked.
- The electrical supply is suitable for the equipment supplied.

For header/distributor connection operations it is essential to comply as follows:

- Employ authorized personnel only.
- Make sure the supply circuit is open (no pressure).
- When performing welding operations make sure the flame is not directed towards the equipment (insert a shield If required).

Hydraulic circuit shall comply as follows:

- Refrigerant, temperature and pressure must agree with the data on the product label of the relevant heat exchanger.
- The supplied heat exchanger is optimized for the refrigerants as stated in the data sheet or order documents. Please contact Alfa LU-VE before using any other refrigerants. The allowed maximum pressure (design pressure PS) is noted on the type plate. During production the heat exchanger was subjected to a strength test exceeding the design pressure PS. However, during normal use the design pressure PS may not be exceeded.
- Heat exchangers supplied by Alfa LU-VE are normally not equipped with a high-pressure cut out. The installer is responsible for fitting a high-pressure cut out on the system in which the heat exchanger is used.
- The heat exchanger shall not be blocked in. If the ambient temperature rises, the pressure could rise and exceed the design pressure.

1.3 Intended use

Air coolers are partly completed machinery according to Machine Directive 2006/42/EC (EU market) - The Supply of Machinery (Safety) Regulations 2008 (UK market) and are intended for incorporation in cooling systems. Declarations of Incorporation are available on alfa.luvegroup.com.

The product is built according to the following standards and directives:

EU market	UK market
2014/68/EU Pressure Equipment Directive (PED)	Pressure Equipment (Safety) Regulations 2016 (PER)
EN 60204-1 Safety of Machinery - Electrical equipment of machines	The Electrical Equipment (Safety) Regulations 2016
2014/30/EU Electromagnetic Compatibility Directive	Electromagnetic Compatibility Regulations 2016
2014/35/EU Low Voltage Directive	The Electrical Equipment (Safety) Regulations 2016
Any applicable local or national legislation	

However it is forbidden to operate our equipment before the machine incorporating the products or making part thereof has been declared to be in conformity with the EC Machine Directive. The heat exchanger shall be installed in conformance with the recognized national standards of electrical and refrigeration installation practice. It is not permitted to use the heat exchanger for any purpose other than the one it was designed for by Alfa LU-VE.

1.4 Where to find product information

Detailed technical data for individual product models are available in order related documents, on the product label and in product data sheets. Comprehensive technical information for all Alfa LU-VE air heat exchanger products is available on-line on alfa.luvegroup.com. This includes:

- Product manuals
- Instruction manuals
- Product leaflets & brochures
- Product data sheets (selection software)
- Dimensional drawings
- Electrical wiring diagrams
- Certificates

Alfa LU-VE offers world-wide service and support. In case of any questions or uncertainty please contact your local Alfa LU-VE representative.
Contact addresses are available at alfa.luvegroup.com.

Optigo F45CC - F50CC

1.5 Warning symbols

The following warning symbols are used in Alfa LU-VE instruction manuals.

	General warning. Risk of malfunctioning and/or damage.		Hot surfaces. Danger of burns. Wear adequate protection.
	Moving parts. Danger of injuries. Do not operate without protection guard mounted.		Sharp surface. Danger of cutting injuries. Wear adequate protection.
	Overhead load. Never stand or walk below the load.		Mandatory prescription. Follow instructions as provided.
	Forklift trucks or other logistic vehicles. Stay clear of working space.		Risk of injuries. Wear head protection.
	Electrically powered component. Switch off power supply before any maintenance or installation activity.		Risk of injuries. Wear safety footwear.
	Cold parts. Danger of frostbite injuries. Wear adequate protection.		Risk of injuries. Wear protective gloves.
	Danger of crushing. Wear adequate protection.		Manuals must be carefully examined and instructions should be followed up at all times.

1.6 Health and hygiene

If the equipment is used in the food industry, responsibility with regard to hygienic conditions lies with the end user.

1.7 Checks at delivery

At the moment of delivery, carefully check the units.
All finned coils are pressure tested with dry air, sealed and supplied with a slight overpressure. Prior to installation, the leak resistance must be checked with the schrader valve.
Any present damage must be reported on the delivery note with a description of the damage.
Damaged heat exchangers, including when the damage is not externally visible, are to be reported to the shipping agent and Alfa LU-VE within 24 hours.

1.8 Return of unused heat exchangers

Air heat exchangers that have been delivered in accordance with orders are in principle not returnable. Heat exchangers can only be returned under certain conditions and following consultation with Alfa LU-VE. This applies exclusively to unused units. The heat exchangers that are to be returned should be delivered carriage paid to Alfa LU-VE in the original, undamaged and unwritten factory packaging. Not returnable are:

- Heat exchangers older than three months from the invoice date.
- Heat exchangers that have already been built in and/or are damaged.

1.9 Guarantee

For our guarantee conditions, we refer to the Terms of Delivery. In general, the warranty period between Alfa LU-VE and the customer is 24 months from factory invoice date or 12 months of operation, which ever comes first. Heat exchangers must not be returned or disposed of, other than in accordance with instructions from Alfa LU-VE. Contact your local Alfa LU-VE representative before any remedial action is taken on the units, otherwise warranty may be void.

1.10 Disposal

After decommissioning the heat exchanger coil should be emptied from refrigerant fluids. Avoid any emissions in the environment. Any refrigerants and oil residuals must be properly disposed of according to applicable environmental regulations. The fully emptied heat exchanger unit, including all electrical components, should be handed in to the proper authorized companies for recycling.
Alfa LU-VE products are made of:

- Plastic materials: polyethylene, ABS, rubber.
- Metallic materials: iron, stainless steel, copper, aluminium (possibly treated).

2 Product description

2.1 General information and application

Optigo FCC are cubic light industrial air coolers for general application in small to medium-sized cooling, freezing and working rooms. Optigo FCC models are especially suitable for refrigerated working, processing and storage rooms.

- Available in 2 fan diameters:
  F45CC: Ø 450 mm
  F50CC: Ø 500 mm
- Capacity range (SC2 with R404A): 5.4 up to 60.4 kW
- Air flow range: 4,600 up to 32,400 m³/h
- Min. room temperature: -35 °C

Refrigerant	Design pressure
HFC*	24 bar
CO_2	45-60 bar
Brine	10 bar

* Fluid group 2 according to EN 378

2.2 Standard configuration

- High-efficiency coil manufactured from internally grooved Cu tubes and louvered aluminium fins.
- Standard fin spacings: 4.5, 6.0, 7.5 and 10.0 mm.
- Optigo FCC coolers are available with 1 to 4 fans fitted with high efficiency AC or EC fan motors, available in two fan diameters (450 and 500 mm) drawing through the coil.
- Durable galvanized steel casing, powder coated RAL 9003.
- Dismountable and openable casing for cleaning and inspecting purposes. Fitted with hinged drain tray.
- Each heat exchanger is leak tested with dry air and finally supplied with a dry air pre-charge. Fitted with schräder valve on the suction connection for testing purposes (only for HFC and CO_2 units).
- Delivered in mounting position on a wooden pallet covered with a wooden crate.

2.3 Options

- Corrosion protection: Alupaint fins (AP)
- Electric defrost (E). The stainless steel defrost elements (both in coil and in drain tray) are connected to dedicated connection box.
- Hot-gas defrost (G) - *in coil, electrical defrost in drain tray*
- Fan shroud heater
- EC fans (0-10 V) + Modbus
- Fan motors wired to a central connection box
- Fan switches
- Insulated drain tray
- Shut-up sock
- Textile tube adapter
- Air streamer
- Top connections - *for brine models*

2.4 Code description

F45CC	*	1100	N	4	*	*
1	2	3	4	5	6	7

1 Optigo cubic light industrial air coolers (F45CC=Ø 450 mm, F50CC=Ø 500 mm)
2 Application (blank=direct expansion, W=brine)
3 Model type
4 Defrost system (N=air defrost, E=electric defrost, G=hot-gas defrost)
5 Fin spacing (4=4.5, 6=6.0, 7=7.5, 10=10.0 mm)
6 Circuits code - only for brine units
7 Options

3 Product labels

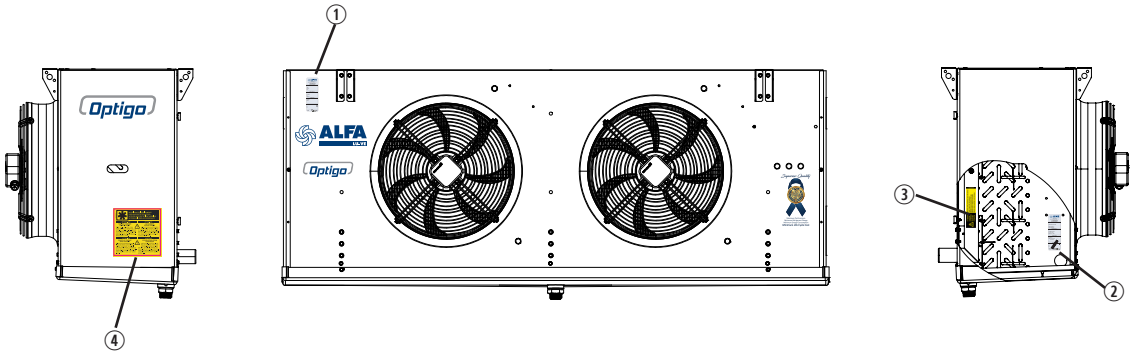

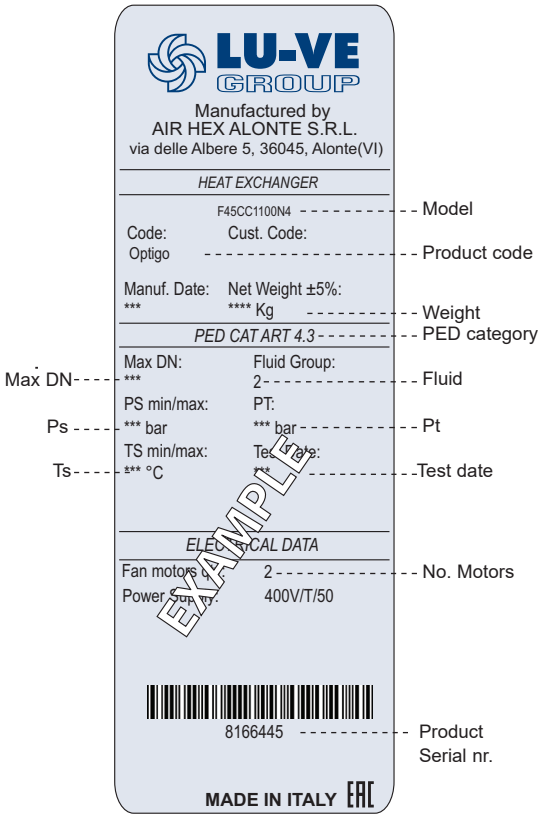

1. Product label

Model	Refer to paragraph "2.4 Code description"
Product code Product serial nr.	Communicate this when ordering spare parts as they identify the unit
Unit Net Weight	Check before any lifting operation to ensure that proper lifting tools are used
PED Category	According to PED
Max DN	Maximum diameter of the distributor tube
Fluid	Refrigerant
Ps	Design pressure
Pt	Test pressure
Coil Ts	Range of operating temperatures for the coil
Test date	Date on which the coil has been pressure tested in the factory
No. Motors	Number of fans

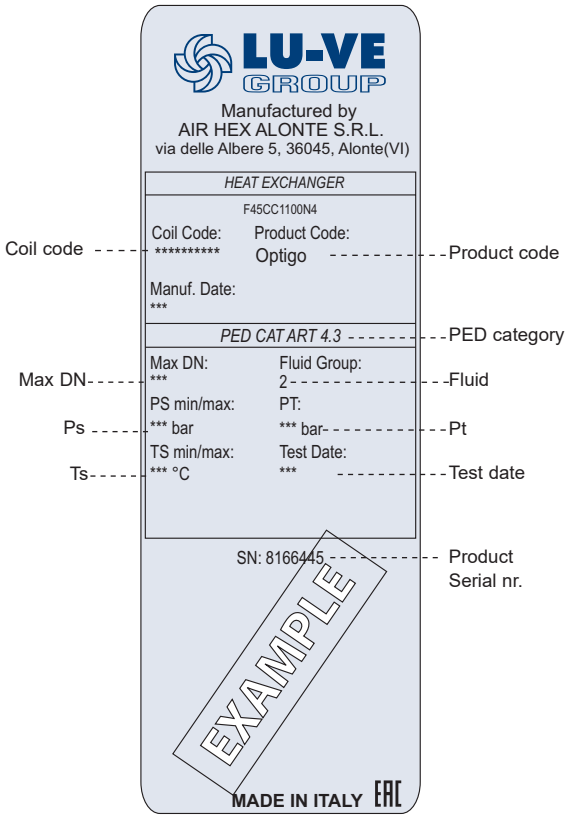

2. Product label - coil

Product code Product serial nr.	Communicate these when ordering spare parts as they identify the unit
PED Category	According to PED
Max DN	Maximum diameter of the distributor tube
Fluid	Refrigerant
Ps	Design pressure
Pt	Test pressure
Coil Ts	Range of operating temperatures for the coil
Test date	Date on which the coil has been pressure tested in the factory

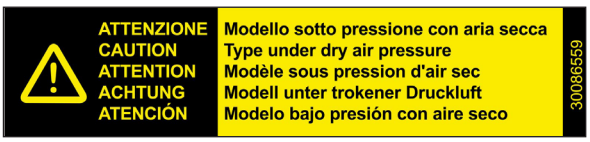

3. Precharge warning

Only for HFC and CO_2 units.
Units are delivered from the manufacturer with an overpressure. Check pressure on the Schrader valve. With unpressurised unit: immediate report to manufacturer and note on bill of delivery.

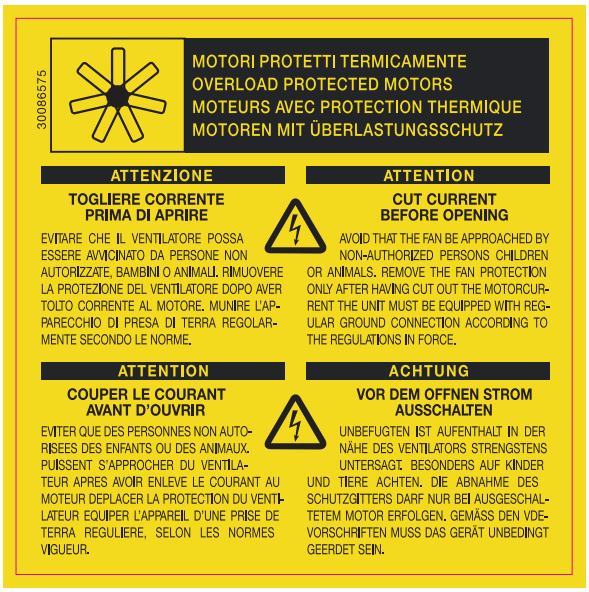

4. Overload protected motors warning

Cut out power supply before any maintenance or installation activity.

4 Transport and storage

During transportation the heat exchanger must be handled with all required care. Any instruction or warning signs attached to the heat exchanger or the packaging must be followed. Avoid shocks or continuous vibrations during transport. These may cause damage to the product. If required, consult Alfa LU-VE and disassemble during transport any parts that are likely to be set into vibration. Air heat exchangers must be adequately fixed on the transport vehicle. If temporary storage of the heat exchanger is required, the following points should be observed:

- Store the heat exchanger in its packing, in a dry place with sufficient protection against sun and other environmental influences.
- Always place air heat exchangers on an even surface.
- Do not stack air heat exchangers unless explicitly indicated this is allowed.
- Storage temperature between -40° C and +50 °C.
- Never open or remove the schrader valves. Overpressure in the coil must be maintained.

Shelf life of air coolers is one year. If longer storage periods occur, check:
- Proper functioning of the fan motor.
- Mounting brackets, lifting lugs and fan fixings for corrosion.

5 Unpacking and lifting

Optigo FCC models are delivered in mounting position on a wooden pallet covered with a wooden crate. Handling and positioning can take place with use of a forklift.

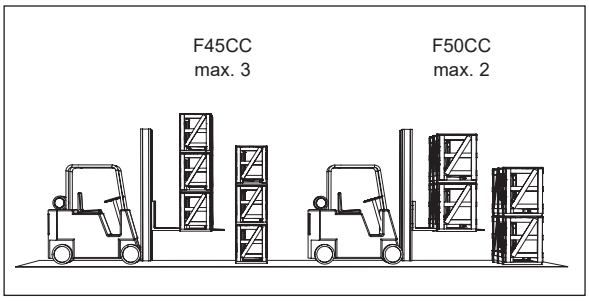

Packed air coolers may be stacked during transportation and storage. Respect the maximum number of stacked air cooler units.

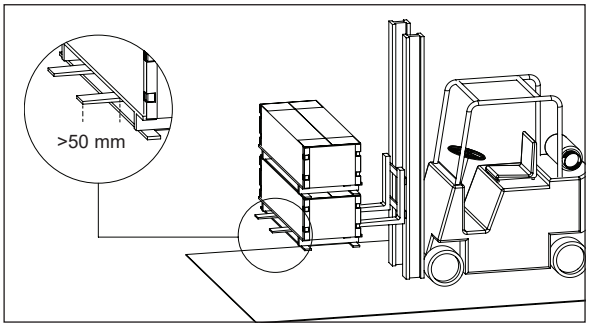

In order to avoid damage to the air cooler or falling of the unit, ensure that the lifting forks cover all beams from the lower support pallet.

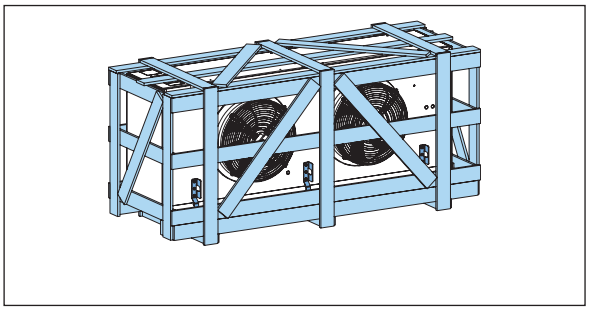

Place the unit on the ground.

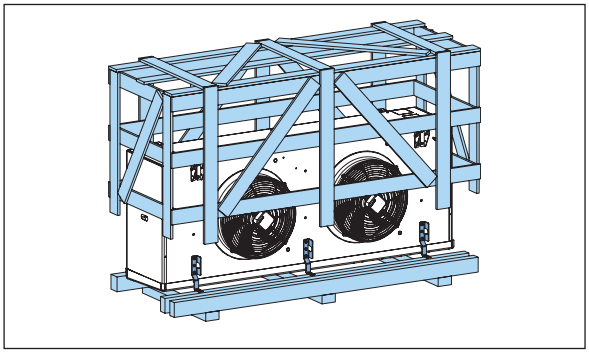

Loosen the fixing materials from the top crate.

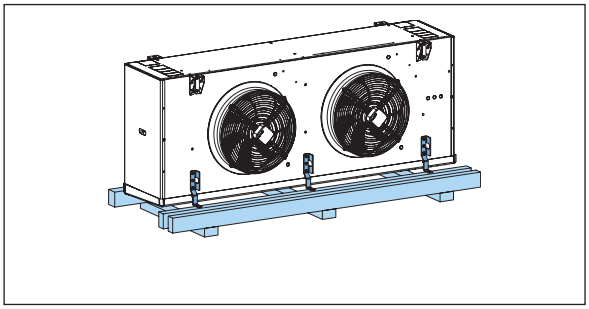

Remove top crate.
Insert the forks under the lower pallet.

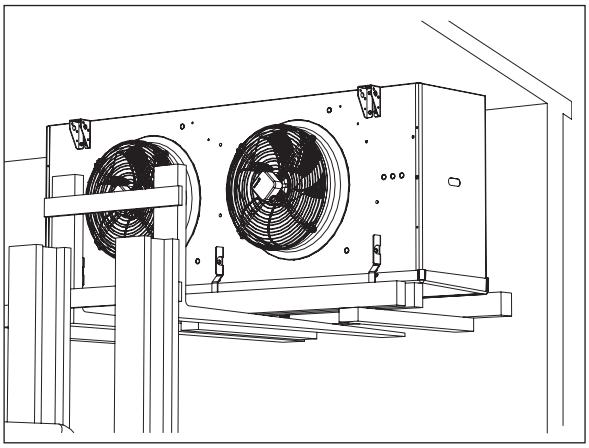

Lift the unit into mounting position.
Ensure that the cooler is not lifted directly onto the drain tray or the finned coil. Utilizing the proper wooden transport beams and/or pallets prevents the cooler bending at the extremes such that the cooling circuit or other components are damaged. All lifting procedures must be carefully carried out by properly qualified personnel, ensuring absolute safety at all times.

Secure the unit following instructions given in chapter "6 Installation".

Once the unit is secured in the installation position, loosen the fixing materials from the lower support pallet, remove the remaining packaging materials and lower the forks.

6 Installation

6.1 Mounting dimensions

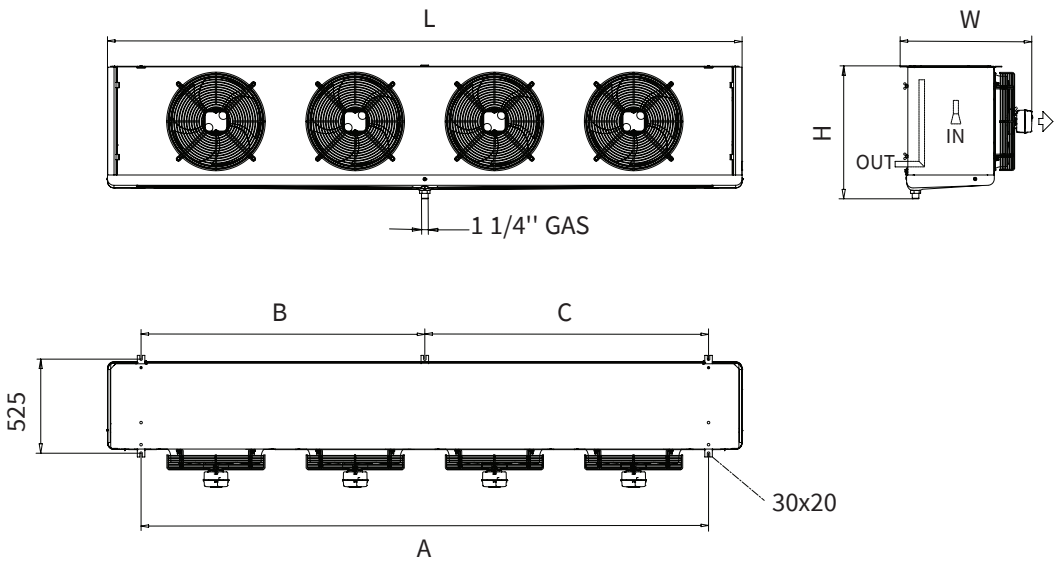

	Model	n. of fans	Dimensions (mm)					
			L	A	B	C	W	H
F45CC	**00 **02	1	1290	800	800	-	675	660
F45CC	**06 **08	2	2090	1600	1600	-	675	660
F45CC	**12 **14	3	2890	2400	2400	-	675	660
F45CC	**18 **20	4	3690	3200	1600	1600	675	660
F50CC	**00 **02	1	1290	800	800	-	730	880
F50CC	**06 **08	2	2090	1600	1600	-	730	880
F50CC	**12 **14	3	2890	2400	2400	-	730	880
F50CC	**18 **20	4	3690	3200	1600	1600	730	880

Coolers must be hung such that the coolers can contract and expand somewhat. Cooler contraction occurs during refrigeration operation, and cooler expansion occurs during defrost. For air coolers with copper tubing this figure runs up to 1.65 mm per meter cooler length. All heat exchangers must be set up level.

Weight information are listed on the product label and/or in the relevant product documentation.

Detailed drawings showing all required mounting and refrigerant connection dimensions are available available for download on alfa.luvegroup.com.

Dimensional drawings
Optigo F45CC-F50CC

6.2 Mounting bracket

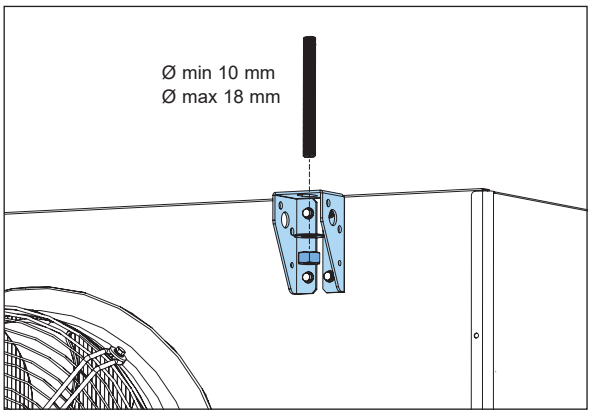

Use suitable studs when mounting the unit to the ceiling.
Fix the unit to cold room ceiling by securely tightening nuts and washers.

6.3 Location and technical spaces

Heat exchangers should be positioned such that the following criteria are met:

- Adequate space must be left on the air inlet side of the heat exchanger. The air discharge side should be free of restrictions. Recirculation of air is to be avoided.
- The heat exchangers should not be connected to ducting on either the air inlet side or discharge side, unless the heat exchanger has been specifically designed for such an application.
- Adequate distance from heat sources.
- Adequate distance from sources of radio or electromagnetic emissions.
- Adequate space and illumination must be left for maintenance operations and personnel.
- Installation area free from oils, vapours and flammable gases.
- Installation surface shall support the weight of the unit and minimize vibration transmission.
- Weight information and dimensions are listed on the product label and/or in the relevant product documentation.
- Do not obstruct passageways or doors.
- Coolers must be hung such that the coolers can contract and expand somewhat. Cooler contraction occurs during refrigeration operation, and cooler expansion occurs during defrost. For air coolers with copper tubing this figure runs up to 1.65 mm per meter cooler length. All heat exchangers must be set up level.
- Hazards, position of controls and switch must be correctly signalled. Controls and switch must be positioned so that they are easily accessible and manageable.

It is important to remember that the total amount of heat to be dissipated depends on receiving the full design air volume at the design entry air temperature which allows this air to be freely discharged after passing through the heat exchanger. Any restrictions may impair the performance of the cooler. If in doubt, please check with Alfa LU-VE.

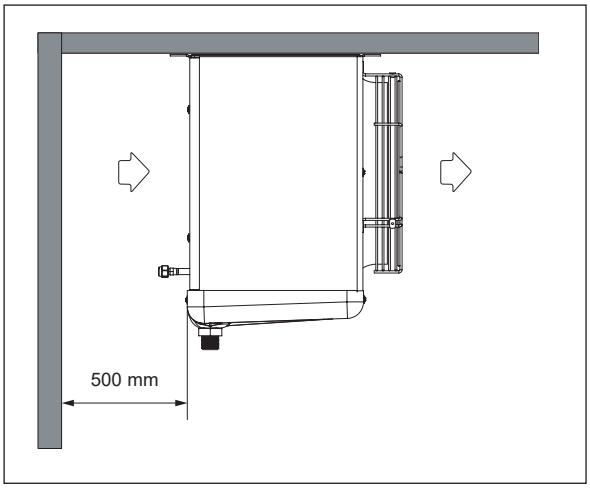

Respect the minimum wall distance on suction side.

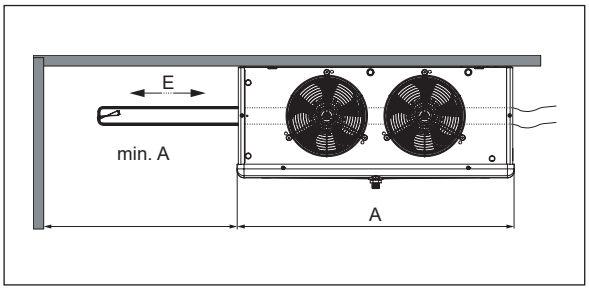

Respect the minimum space for electric defrost extraction and replacement.

6.4 Refrigerant connections

All pipework and connections must be made in accordance with good refrigeration design and installation practice. Ensure that no stresses are transmitted to the pipework. All pipework should be adequately attached to the walls/ceilings of the cold room and not only to the cooler itself. Pipework must be adequately supported to prevent vibration or external load on the cooler headers, etc.
Do not adapt headers position to the suction line.

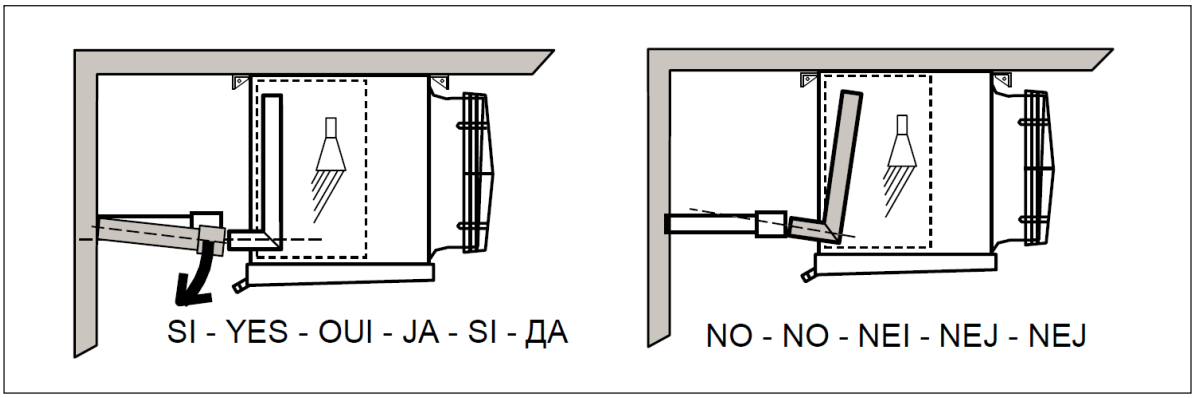

Ensure the supply circuit is closed (no pressure) before connecting the suction lines.

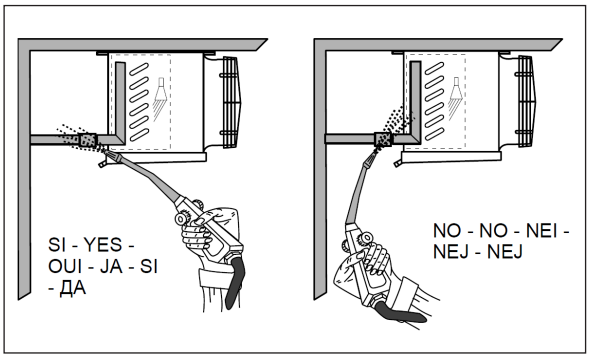

Ensure the flame nozzle is not aimed at the equipment, when welding.

6.5 Using secondary refrigerants

In order to avoid crystallisation, and the consequent erosion of the circuit, the temperature of the secondary refrigerants may never fall below the protection temperature of the relevant secondary refrigerant. To avoid circuit erosion, the flow rate may not exceed the design value as indicated in the product specification without prior permission from Alfa LU-VE. The secondary refrigerant used must have protective agents against oxidation, corrosion, erosion, furring, rust, etc. and may not contain any contaminants. Secondary refrigerants may only be used in a closed system.
When the system has been filled, it must be completely de-aerated. Deaeration of a secondary circuit is of major importance in all instances since oxygen contributes towards corrosion, in the worst scenarios leading to circuit leakage, and other problems and affects inhibitors. For correct design, de-aeration and operation always follow instructions given in the secondary refrigerant manufacturer manual. Particular attention is required when using potassium formiate based heat transfer fluids: the piping system and venting/draining valves of the heat transfer section must be adapted for the heat transfer fluid in question.

6.6 Pressure test

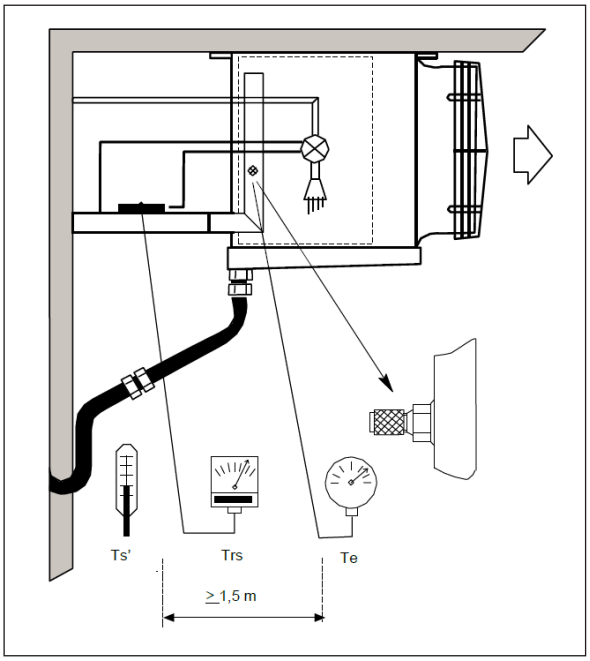

Ts'=cold room air inlet temperature.
Te=evaporating temperature. It is related to the refrigerant pressure on the unit cooler outlet.
Trs=refrigerant superheat temperature, on suction line near thermostatic valve bulb.
(Trs-Te)=superheat

(Trs-Te) ≤ 0.7 x (Ts'-Te)

Keep the superheat as low as possible to obtain maximum unit cooler performance.
The thermostatic valve fitted must be correctly sized for the installation conditions and adjusted for correct system operation.

6.7 Drain line

Check all drain lines and drain trays to ensure that no improper material such as, e.g., packaging material blocks the drain.

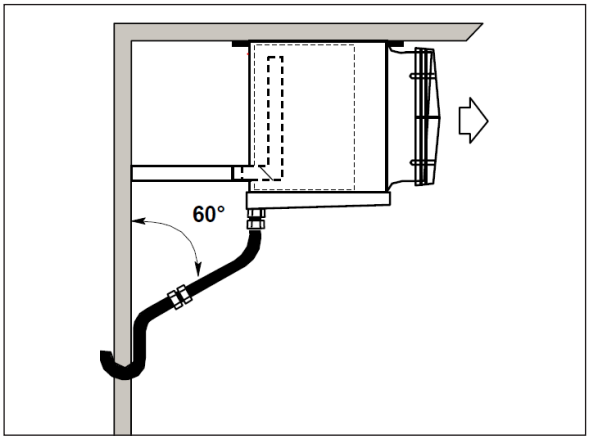

All pipework should be adequately attached to the walls/ceilings of the cold room and not only to the cooler itself.

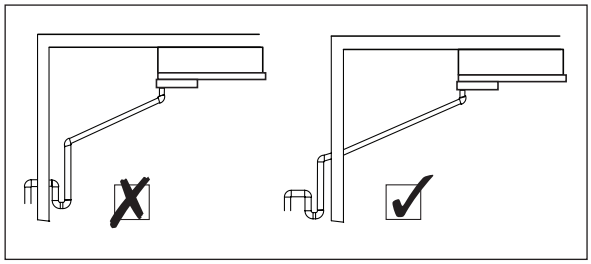

The drain line diameter must be at least the size of the drain tray drain diameter and should be laid with an adequate slope. For room temperatures below 0° C drain line insulation and an internal or external heating element are required to prevent freezing. A syphon must be installed on the drain line, outside the cold room.

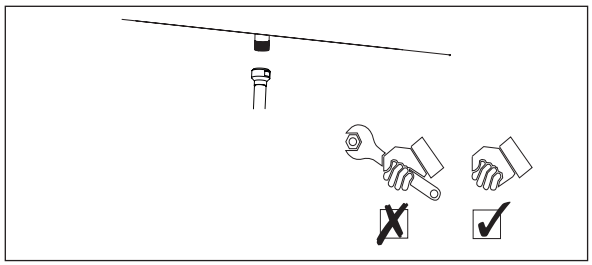

Tighten drain connection by hand only.

6.8 Hot-gas connections

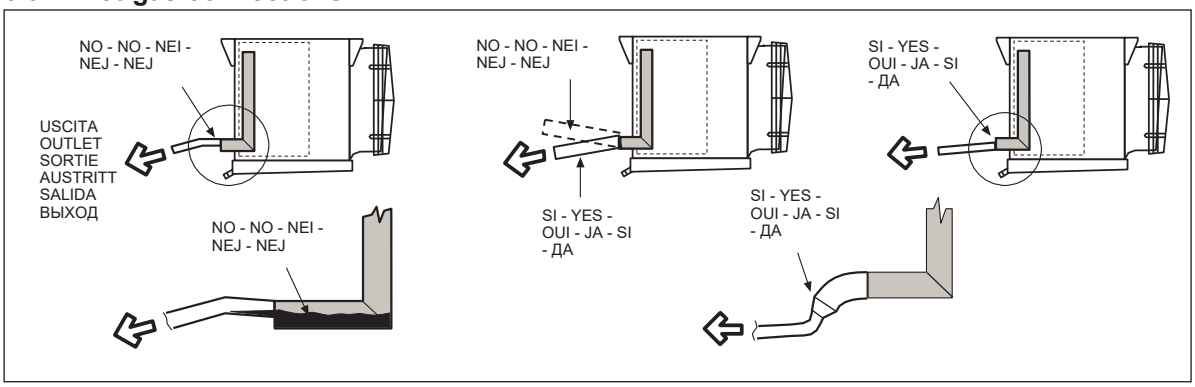

6.9 Electrical connections

All electrical connections must be made in accordance with the locally valid regulations and in conformance with good installation practice. The site supply voltage, frequency, accepted power rating and number of phases must comply with the details on the technical documentation. All electrical supply lines must be connected to the terminal boxes through suitable waterproof glands using bottom entry or, in case of horizontal installation, the cable is routed to form a water trap. Be sure to provide grounding incorrect grounding can cause eletric shock.
If the heat exchangers are installed and there is to be an appreciable delay in putting the plant into operation, a temporary electrical supply should be connected to each motor, sufficient to run for at least 4 hours. This procedure should be carried out at least once every 4 weeks, until the heat exchanger is fully operational. It is up to the end user to verify the conditions for protection by automatic disconnection of supply, according to applicable standards. Heat exchangers are designed for TN power systems. The insulation fault protection must be part of power supply of the heat exchanger and is not supplied by the manufacturer.

The following data determine which connection diagram is to be selected and respected for electrical installation:
- Heat exchanger model indication
- Fan motor type
- Electrical options

When in doubt always contact your local supplier or Alfa LU-VE representative for assistance.

Ensure complete electrical isolation before performing any wiring.

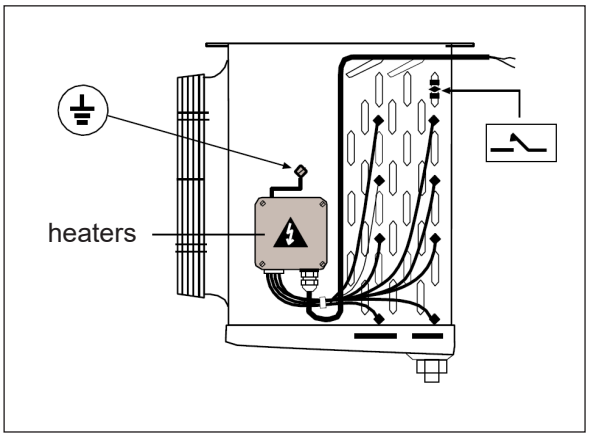

In accordance with the current legislation, install a single pole terminal in a visible position between the unit and the power supply. Opening between terminals 3 mm at min.
Connect terminals by following the wiring diagrams on the cover.
For systems using electrical/hot-gas defrost, a defrost termination thermostat should be used, having a range of 10 °C to 20 °C with a sensor attached to the top return bends of the coil block or buried in the top of the coil block fins.

6.10 Power failure

In order to avoid damage to the compressor, the refrigerant supply must be closed in the event of power failure, e.g. by closing the magnetic valve. Safety measures elsewhere in the system will prevent the pressure in the heat exchanger from exceeding the design pressure.

6.11 Fan motor connections

The maximum load of the motors and the recommended settings for the overload relays are to be respected. The built-in thermal overload protection must be integrated in the control circuit when a connection in the terminal box is present. The electrical control circuit should be arranged with a manual reset device in order to prevent continuous on/off switching (tripping) of the motors. Suppliers and manufacturers of electrical motors provide no guarantee for motors that are combusted through overload.
Ensure complete electrical isolation before performing any wiring.

F45CC AC fan motors

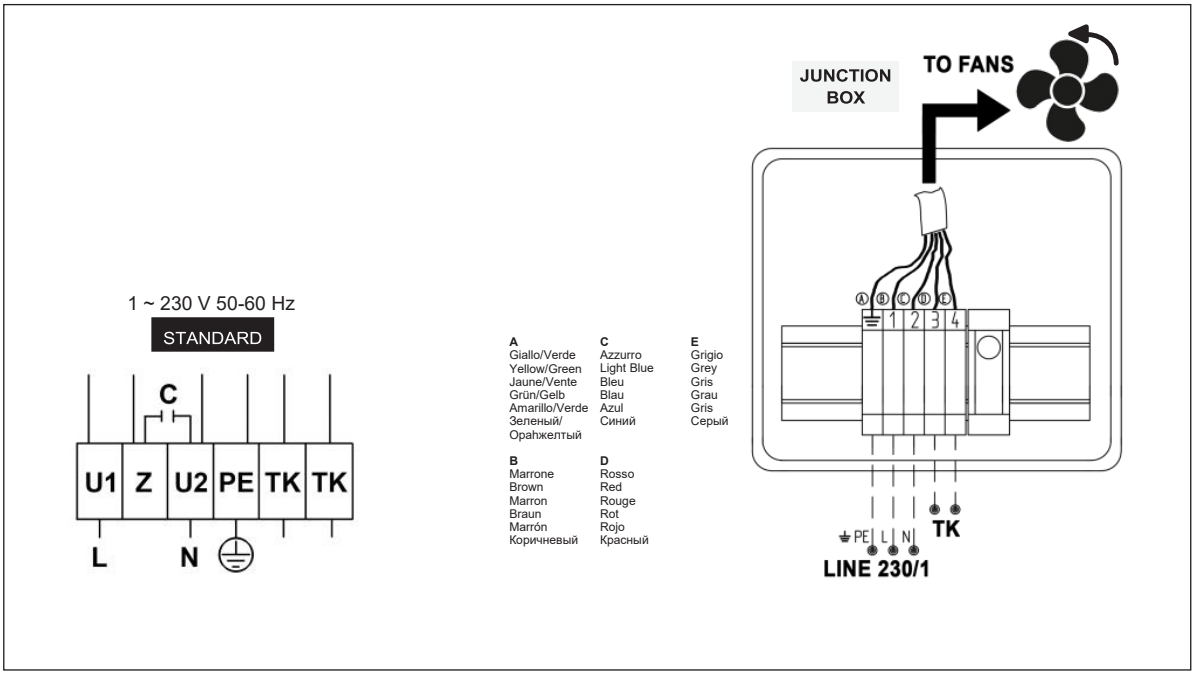

Model	Type	Power supply	Ø mm	Nominal power (x1) W	Nominal current (x1) A
F45CC	AC	1~230 V - 50 Hz	450	480	2.1
F45CC	AC	1~230 V - 60 Hz	450	665	2.9

F50CC AC fan motors

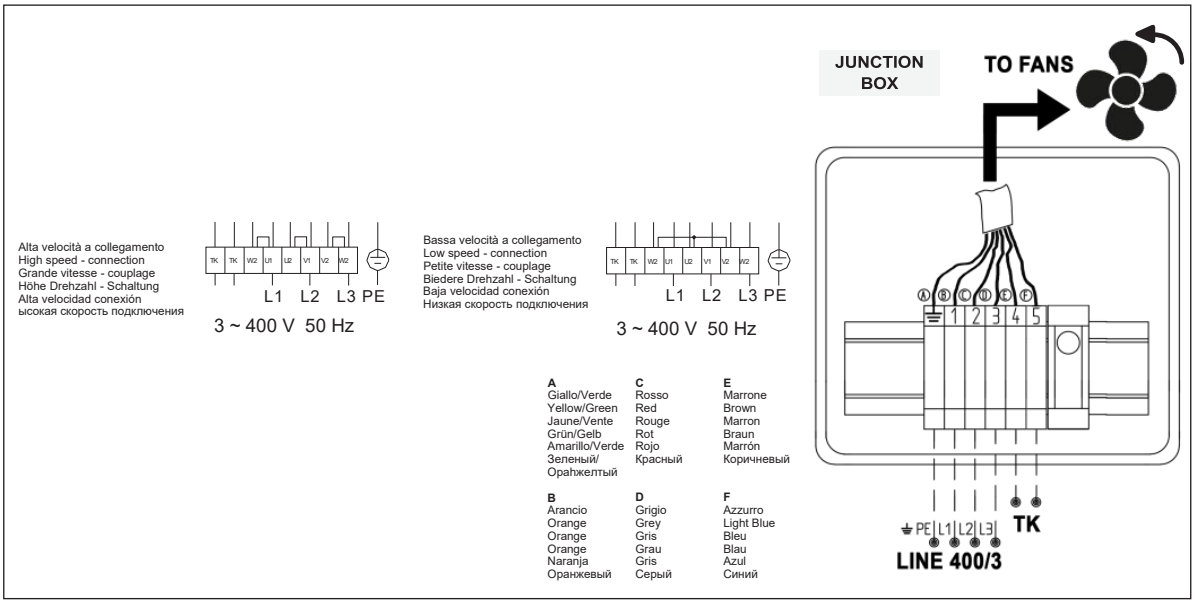

Model	Type	Power supply	Ø mm	Nominal power (x1) W	Nominal current (x1) A
F50CC	AC	3~400 V - 50 Hz Δ	500	840	1.45
F50CC	AC	3~400 V - 50 Hz Y	500	540	0.96
F50CC	AC	3~460 V - 60 Hz Δ	500	1200	2.0
F50CC	AC	3~460 V - 60 Hz Y	500	700	1.05

Fan thermal protection

The fan thermal protection TK is connected to the fan power counter fitted to the system to ensure the correct functioning of the fan, which increases its power draw especially at low temperature and when heavily frosted. TK protection is recommended instead of circuit breakers as it allows the fans to increase their power draw, guaranteeing reliable operation over time.

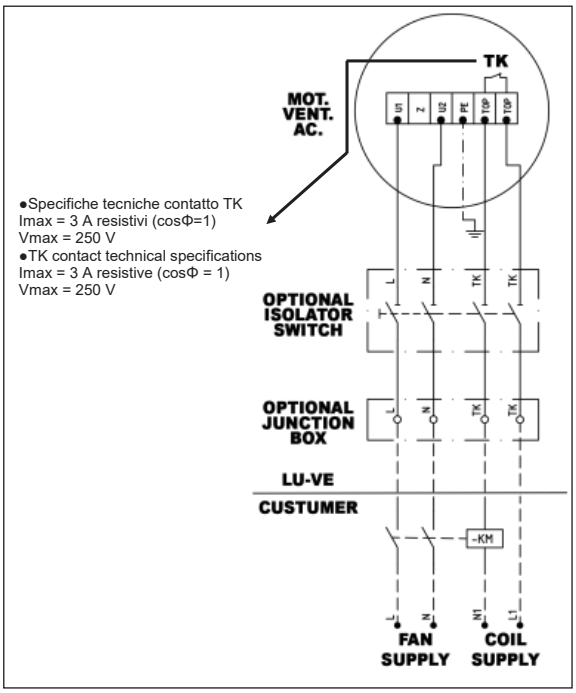

Example of fan thermal protection
This connection scheme is not intended to be exhaustive. Always provide a differential magnetothermal protection in accordance with local regulations.

F45CC EC fan motors

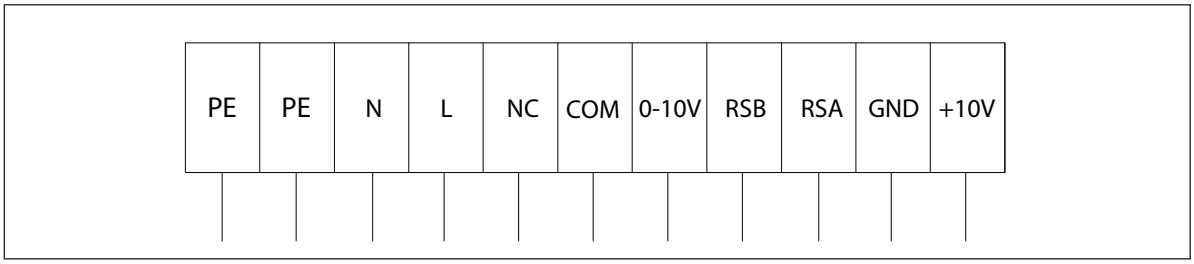

Model	Type	Power supply	Ø mm	Nominal power (x1) W	Nominal current (x1) A
F45CC	EC	1~230 V - 50/60 Hz	450	410	1.8

F50CC EC fan motors

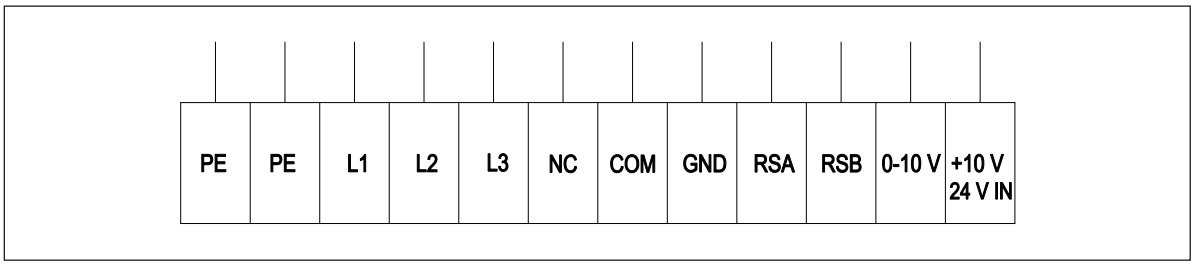

Model	Type	Power supply	Ø mm	Nominal power (x1) W	Nominal current (x1) A
F50CC	EC	3~400 V - 50/60 Hz	500	1000	1.6

6.12 Defrost

Always refer to the electrical scheme for both connections and nominal voltage of the electrical defrost option. Earth cable must always be wired and connected to the appropriate terminal in the connection box. Always refer to the electrical scheme order to identify the ground terminal. Installation of a switch for defrost line is mandatory and is the responsability of the installer. Warning about the neutral wire: it must be connected if indicated in the electrical scheme. It must not be connected if it is not shown in the electrical scheme.
Coolers without defrosting facilities may not be used in room temperatures below +2 °C.
If the cooler is working on a time termination cycle, it is suggested that an initial defrost period be set at 35 to 45 minutes (in combination with the number of defrost periods). This setting is to be refined through trial and error, according to the actual defrost requirements depending on cooler model, size, and working conditions. If the defrosting cycle is terminated via a temperature sensor, close attention must be taken in positioning the thermostat sensor. The temperature sensor is usually set at a value between 10°C and 15°C. In general it should be positioned where the last traces of frost disappear, usually on the coil.
At room temperatures of around 0°C the last frost is usually in the top of the coil block. At room temperatures below -20°C, this is the consequence of the so-called 'chimney effect', usually in the lower half of the coil block at approx. ¼ of the fin height. Unfortunately a number of factors (cooler position relative to an access door or stored products, precise setting of the thermostatic expansion valve, etc.) may cause identical coolers to perform differently. Thermostat sensors should NOT be placed in the direct vicinity of a heater element. The final position of the temperature sensors must be determined through trial and error.

6.13 Electric defrost connections

Ensure complete electrical isolation before performing any wiring.
The following electrical connection diagrams for electrical defrost connection is shown as examples. For additional details, please refer to the connection diagrams available for download on alfa.luvegroup.com.

Electrical connections
Optigo F45CC-F50CC

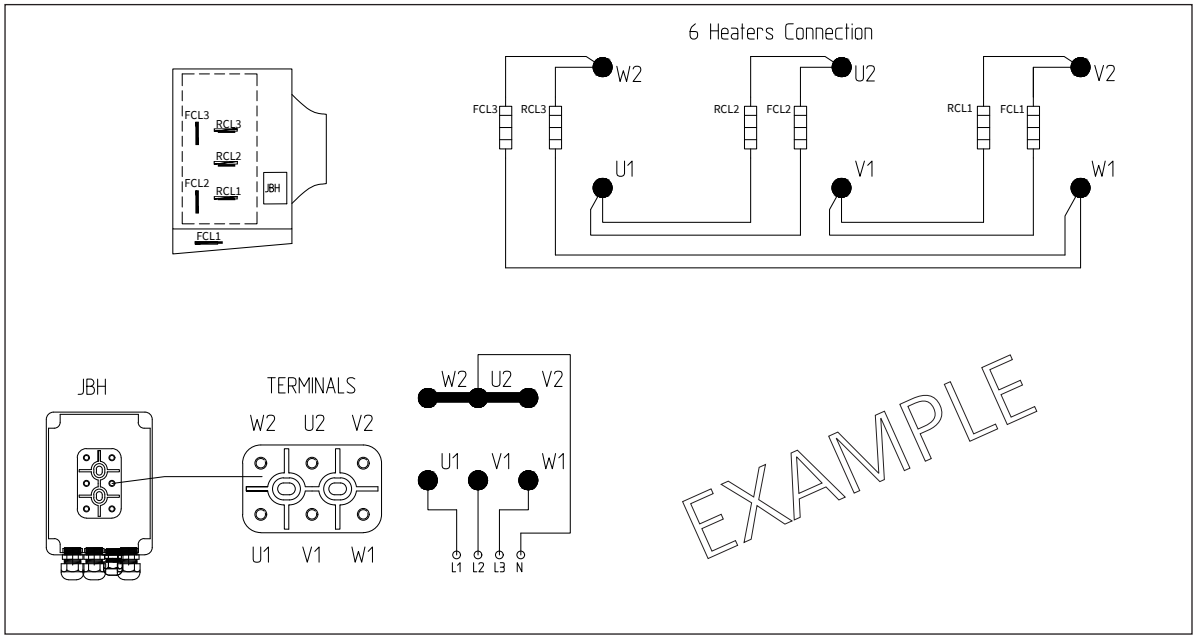

F45CC

F45CC Model		**00	*02	**06	**08	**12	**14	**18	**20
Fans	**No.**	**1**	**1**	**2**	**2**	**3**	**3**	**4**	**4**
RCL in coil	No.	3	3	3	3	3	3	3	3
	W (x1)	850	850	1585	1585	2300	2300	3020	3020
	W tot	**2550**	**2550**	**4755**	**4755**	**6900**	**6900**	**9060**	**9060**
FCL in coil	No.	-	2	-	2	-	2	-	2
	W (x1)	-	850	-	1585	-	2300	-	3020
	W tot	**-**	**1700**		**3170**	**-**	**4600**	**-**	**6040**
FCL in drain tray	No.	1	1	1	1	1	1	1	1
	W tot	**850**	**850**	**1585**	**1585**	**2300**	**2300**	**3020**	**3020**
E*	**W tot**	**3400**	**5100**	**6340**	**9510**	**9200**	**13800**	**12080**	**18120**

F50CC

F50CC Model		**00	*02	**06	**08	**12	**14	**18	**20
Fans	**No.**	**1**	**1**	**2**	**2**	**3**	**3**	**4**	**4**
RCL in coil	No.	4	4	4	4	4	4	4	4
	W (x1)	850	850	1585	1585	2300	2300	3020	3020
	W tot	**3400**	**3400**	**6340**	**6340**	**9200**	**9200**	**12080**	**12080**
FCL in coil	No.	-	2	-	2	-	2	-	2
	W (x1)	-	850	-	1585	-	2300	-	3020
	W tot	**-**	**1700**		**3170**	**-**	**4600**	**-**	**6040**
FCL in drain tray	No.	1	1	1	1	1	1	1	1
	W tot	**850**	**850**	**1585**	**1585**	**2300**	**2300**	**3020**	**3020**
E*	**W tot**	**4250**	**5950**	**7925**	**11095**	**11500**	**16100**	**15100**	**21140**

*E= RCL in coil + FCL in coil + FCL in drain tray

6.14 Fan shroud heater

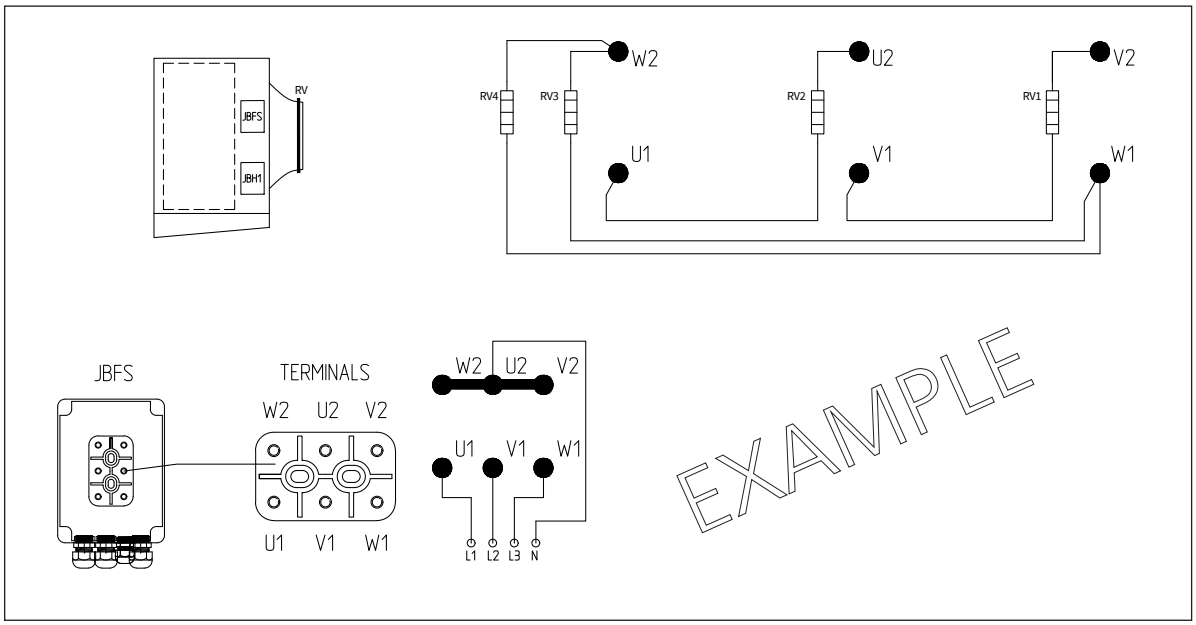

RV	F45CC	F50CC
Ø mm	450	500
W (x1)	**250**	**280**

6.15 Hot-gas defrost

For F45CC and F50CC models, hot-gas defrost option features electric defrost in drain tray.

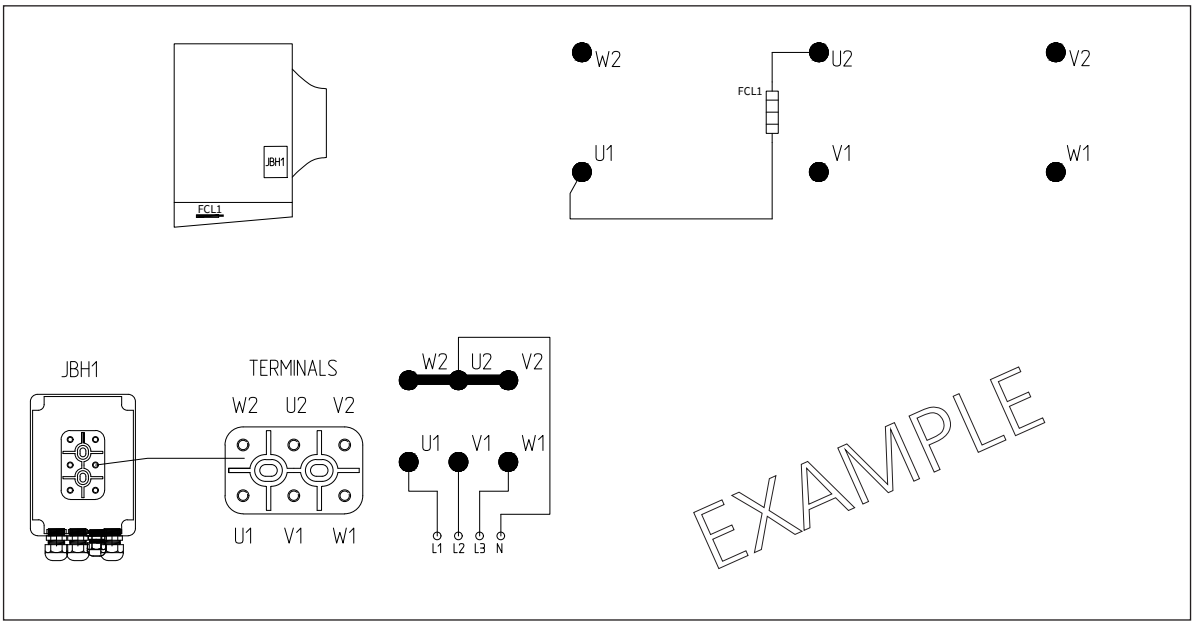

F45CC - F50CC Model		**00	*02	**06	**08	**12	**14	**18	**20
Fans	**No.**	**1**	**1**	**2**	**2**	**3**	**3**	**4**	**4**
FCL in drain tray	No.	1	1	1	1	1	1	1	1
	W tot	**850**	**850**	**1585**	**1585**	**2300**	**2300**	**3020**	**3020**

7 Maintenance

It is essential after delivery that adequate protection and inspection are carried out on the equipment. This is especially important if there is any delay in installing or commissioning the equipment. After commissioning and setting up the defrost systems, the heat exchanger will require maintenance. Regular checks and good maintenance will ensure trouble free operation. The frequency of checks will depend on site location and the specific operating conditions. Equipment installed in industrial or coastal areas, or in any kind of aggressive environment, generally requires more frequent inspections than the same equipment in rural, unpolluted areas. Damage can occur during site installation and during the period prior to commissioning. Inspections and remedial work should take place during this period. On sites where building work is in progress, it is strongly advised that finned block, headers and return bends are covered up to keep them clean and protected from damage until the time of commissioning.
Header and cooler tubes can be extremely cold! Take precautions when maintenance is carried out near the header and cooler tubes.
Ensure complete electrical isolation before performing any maintenance activity.

7.1 Shut down periods

Even during prolonged shut down periods, maintenance should be carried out. If the shut down period is extended, all electric motors should be run once every four weeks for a minimum of 4 hours. EC fans must be kept powered during shut down periods.

7.2 Moisture in the refrigeration system

Moisture in a refrigeration system is undesirable. Moisture can cause malfunctioning in the refrigeration operation. A lesser known problem is that small amounts of moisture in the refrigeration system can after a time cause leakage through the formation of frost clumps. These frost clumps are the result of moisture seeping from the refrigeration system during defrost, as water seeps into the soldering seams and then freezes, resulting in a volume increase. This process repeats itself during each freeze/defrost cycle, as a result of which the cavities (potholes) thus formed become steadily larger and ultimately burst, causing leakage.

7.3 Cleaning and disinfecting

A coil block should be kept clean to guarantee it works well. The user of the heat exchanger should ensure that the cleaning and disinfecting agents that are used do not have a corrosive effect on the materials used by Alfa LU-VE.

7.4 Casing

Casework checks should be carried out at least every 3 months. In doing so, inspect for any deterioration of coating and/or corrosion. If such flaws are noted, take immediately remedial action. Should any damage occur during installation, this should be repaired immediately to prevent further deterioration.

7.5 Coil and drain tray

The heat exchanger coil should be checked at least every 3 months, with close inspection being carried out for such things as leaks or chafing of tubes. In addition, any unusual vibration of the fans should be checked. The unit should be cleaned as instructed when necessary using low pressure compressed air, and/or low pressure water hose or a mild detergent wash. Care must be taken not to hose directly onto fan motors or electric control panels or the electrical connection boxes of the heaters. It should be noted that abnormal atmospheric conditions can greatly harm the lifetime of the finned coil.
Please ensure the drain tray is empty before it is disassembled. The weight of any leftover water could injure the operator if the drain tray fell open accidentally.

7.6 Side panels opening

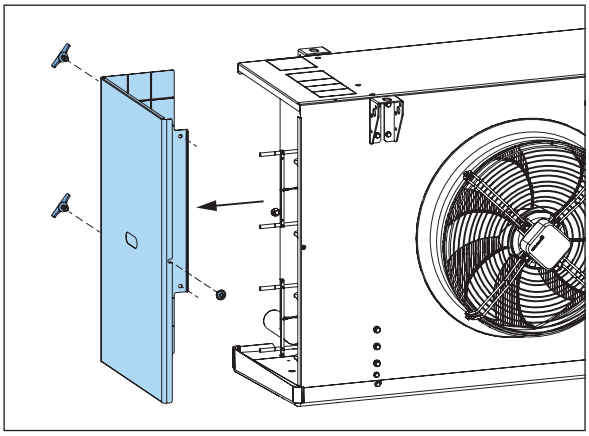

Unscrew the fixing screw and loosen the wing screws to remove the side panel.

7.7 Drain tray opening

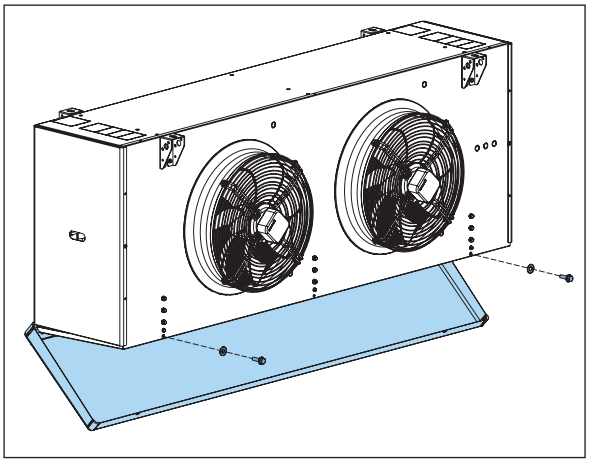

Remove the screws on the fan side and open the drain tray.

7.8 Electric defrost elements replacement

Before handling heater elements always:

- disconnect power supply
- ensure heaters are at ambient temperature.

Electric defrost elements in coil

To remove electric defrost elements in coil (RCL and FCL)

- open the side covers on both sides
- disconnect heater element from connection box
- disconnect heater protection, if any
- remove fixing clip (U) and extract element from coil
- mount new element in reverse order and reassamble the fixing clip in the correct position (V)
- restore electrical connections and close side covers.

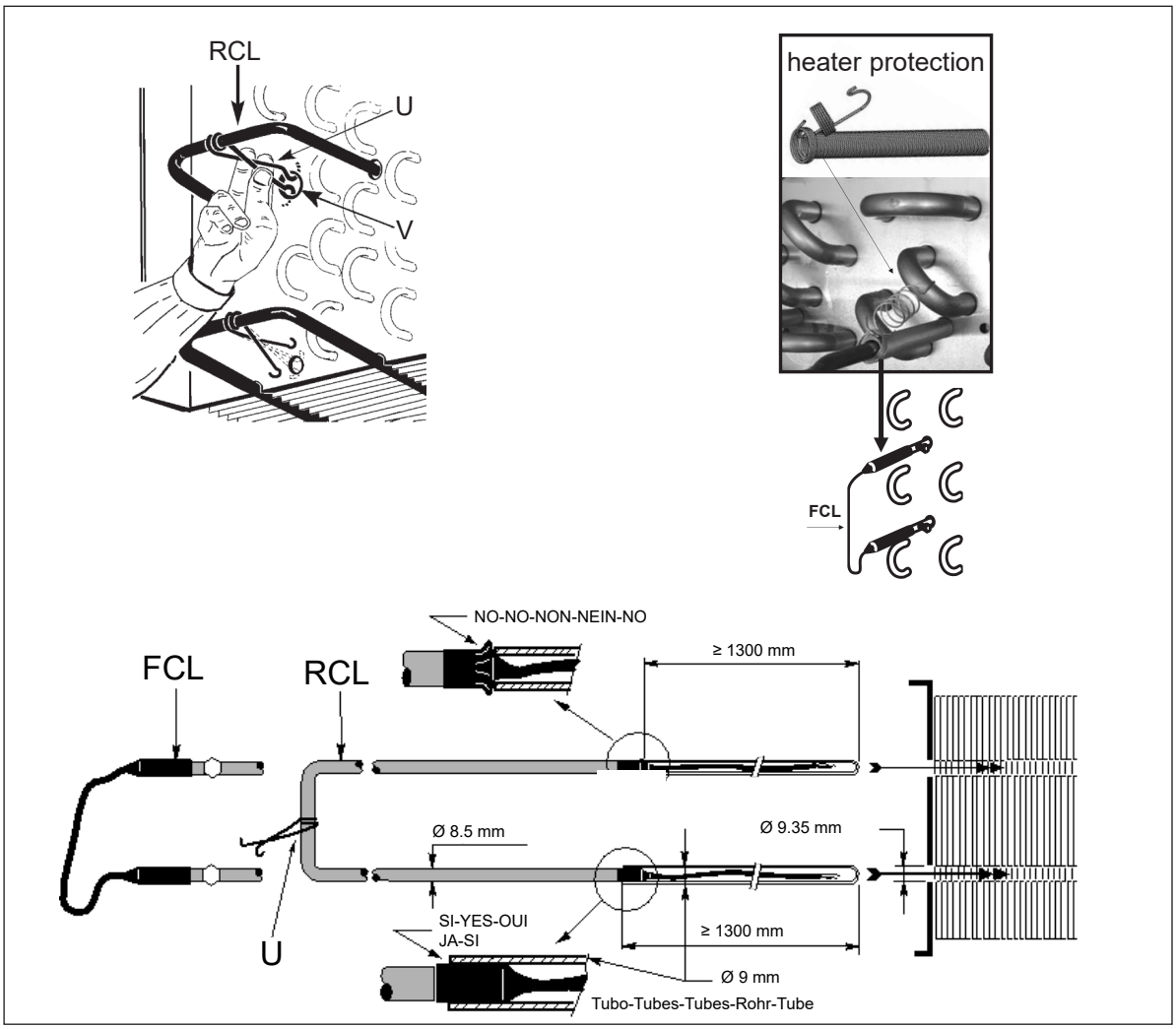

Defrost elements in drain tray

To remove heater elements (FCL) in drain tray:

- open the drain tray
- disconnect heater element
- remove element from bottom
- mount new element in reverse order
- close drain tray and restore electrical connections.

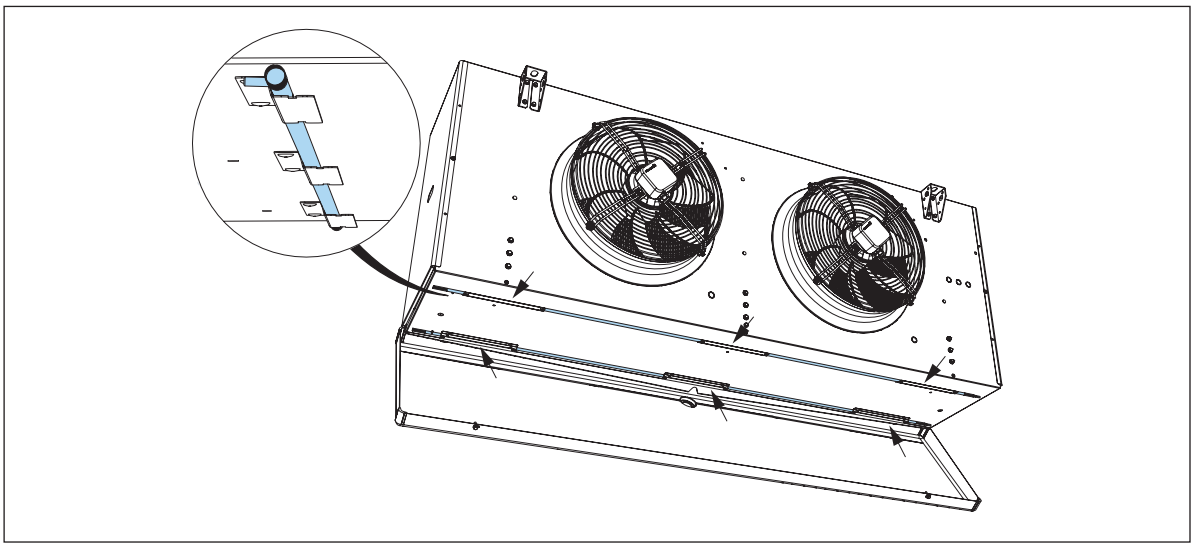

7.9 Fans

Fans should be checked 3 months after commissioning and thereafter depending on operating conditions and as experience dictates, for any dirt build-up and/or unusual vibration, which could ultimately cause damage to the fan or to the heat exchanger itself. Ensure complete electrical isolation before removing fan guards. Fan blades should also be checked for any erosion or corrosion and remedial action taken as necessary. All dirt and other contamination should be removed to avoid imbalanced running of the fan and motor bearing overheating. The security of the fan fastenings and the integrity of the components should be checked integrally as part of the routine maintenance operation. Particular attention should be paid to the fastening screws and balance of the fan blades.

7.10 Fan replacement

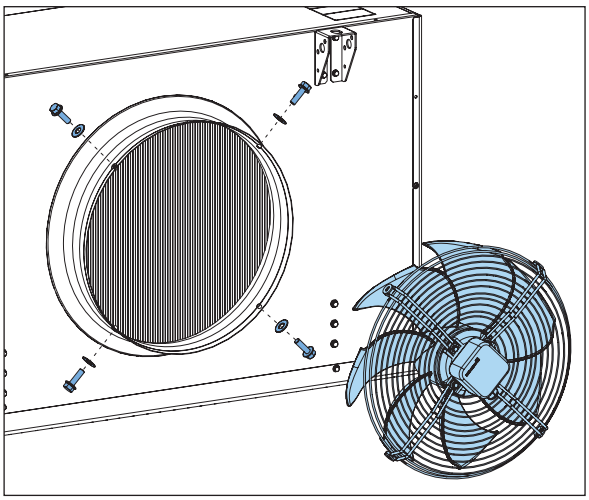

Unscrew fixing bolts and remove old fan.

Mount new fan in identical position. Cable glands must be positioned downwards. Use an anti-corrosion compound when remounting the fixing bolts.

Restore electric connection when the new fan has been mounted.

7.11 Fan shroud heater

- Place the fan shroud heater (A) around the fan shroud.
- Unscrew the fixing screws from the fan grid.
- Place the brackets (B) as shown and fix them with the screws. The bracket shall wrap the resistor without crushing it.
- Fasten the fan shroud heater with the spring.

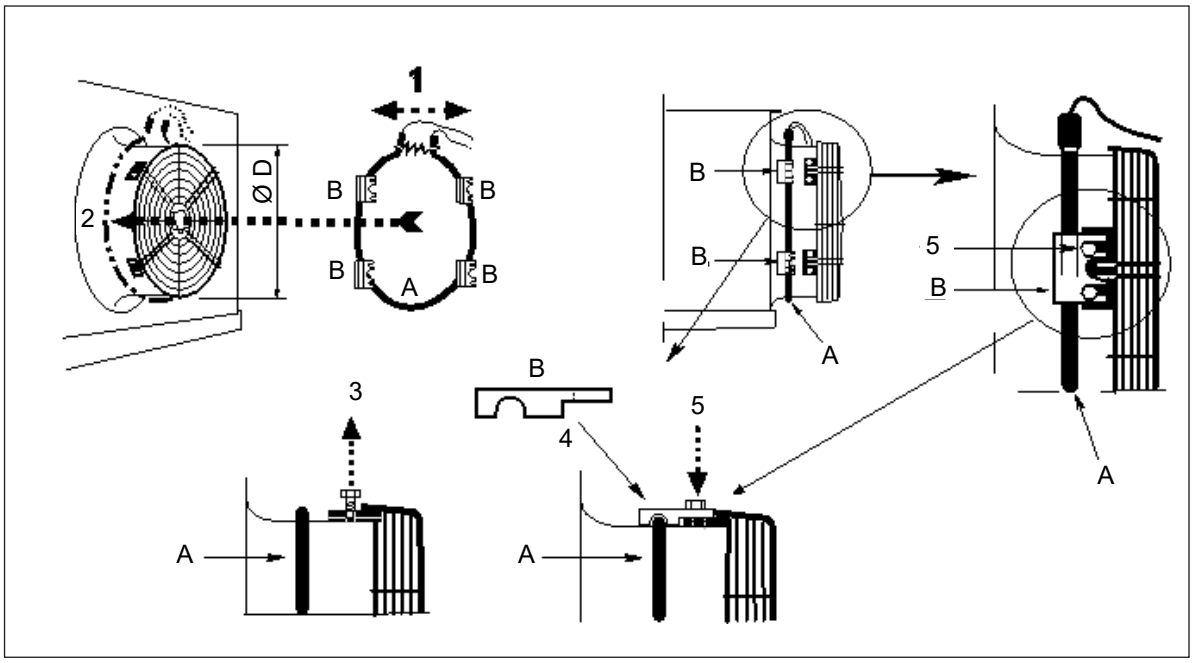

7.12 Air streamer

Air streamer and shut-up sock options cannot be combined: do not install air streamer if shut-up sock is to be mounted.

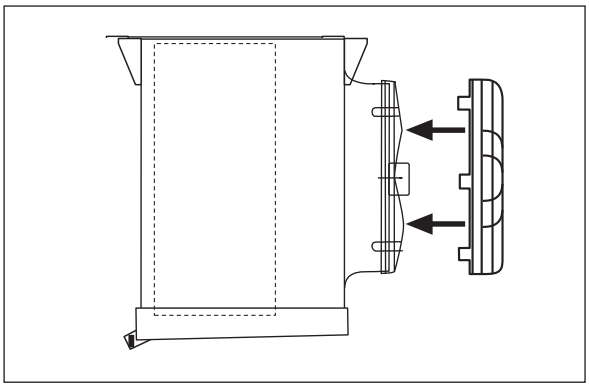

Align the air streamer to the fan grid and secure with the fixing clips.

7.13 Shut-up sock

For its installation, follow the instructions supplied with the shut-up sock.

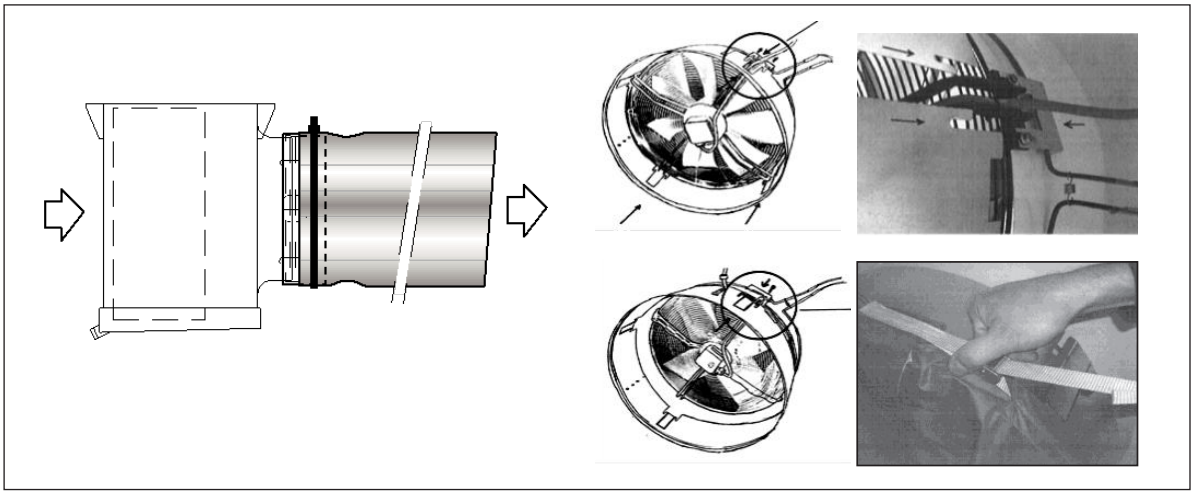

8 Residual risks

- **Sharp edges & corners**
  There is a substantial risk of injuries due to sharp edges and corners of coil and casing. Make sure to wear reliable protection during any handling of the unit and maintenance activities.
- **Drain tray**
  Ensure the drain tray is empty before lowering or disassembling. The weight of any leftover water or ice could injure the operator if the drain tray fell open accidentally.
- **Side plates**
  Removable side plates may only be opened by qualified staff. Ensure the side plates are properly secured after closing.
- **Fans**
  Rotating fans can cause injuries to fingers. Never operate fans without the mounted protection grid and take care of loose clothing. Switch power off before any maintenance.
- **Electrics**
  Power must be switched off before any work or maintenance on electrical parts of the unit. Secure the unit against unintentional switching on.
- **Burns or frostbite**
  (Distributor) tubes can be extremely cold, whereas defrost heater elements and drain tray can getvery hot. Use reliable protection.
- **Working fluids**
  Working fluids might be toxic and/or flammable. These substances may only be handled by qualified staff while taking all necessary precautions and following any applicable regulations.
- **Fan vibrations**
  Continuous fan vibrations can cause material failure and hence a risk of injury or damage due to loose parts. Therefore vibrations must be reduced to a minimum at all times.

9 Troubleshooting

Fault	Possible cause	Required action
Fan motor not functioning	No power supply	Check/restore power supply.
	No control signal (EC motors)	Check/restore control signal.
	Fan blade blocked	Remove obstruction.
	Fan motor burnt	- Check for fan blade obstructions. - Check thermal protection device. - Replace fan motor.
Excess motor noise	Defective fan motor bearing	Replace fan motor.
Excess vibrations	Loose fan fasteners	Tighten fasteners.
	Unbalanced fan blades	Replace fan blades.
Insufficient capacity	Heat exchanger coil dirty/blocked	Clean coil.
	Coil partly blocked by solid ice	- Check defrost cycle settings. - Check defrost heaters. - Perform 100% coil defrost to remove all ice.
	Fans not (properly) functioning	Check fans.
	Refrigerant supply/pressure insufficient	Restore refrigerant supply/pressure to reference values.
Refrigerant leakage	Refrigerant containing parts damaged	- Stop fans. - Close refrigerant supply. - Repair leak.

10 Spare parts

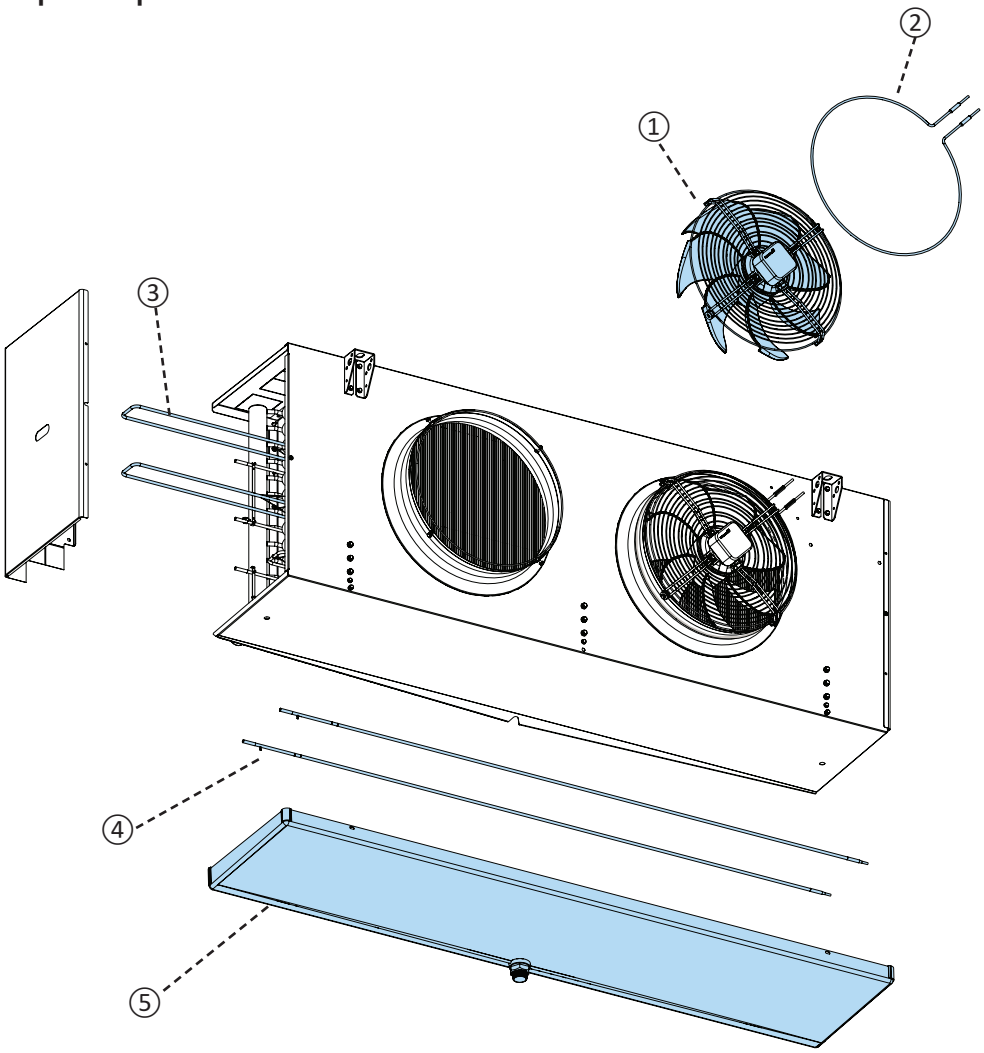

1	Fan motor
2	Fan shroud heater
3	Electric defrost in coil (FCL, RCL - please check scheme "6.13 Electric defrost connections")
4	Electric defrost in drain tray (FCL)
5	Drain tray

Contact your local Alfa LU-VE representative for spare parts order and assistance.

ALFA
LU-VE

alfa.luvegroup.com

LU-VE GROUP
leadership with passion