ARCTIGO IS - AC motors 3-phase with main switch

drawing number: 80025789

alfa.luvegroup.com

BOARD RATED VALUE	
VOLTAGE DC	---
VOLTAGE AC	400 Vac ± 10%
FREQUENCY	50 - 60 Hz ± 2%
POWER MAX	
SHORT CIRCUIT CURRENT (Icc)	
IP DEGREE WITH CLOSED DOORS	IP54
IP DEGREE WITH OPENED DOORS	IP20

This document and its contents is owned by LU-VE Group or its affiliates and protected by laws governing intellectual property and thereto related rights. Without limiting any rights related to this document, no part of this document may be copied, reproduced or transmitted in any form or by any means (electronic, mechanical, photocopying, recording, or otherwise), or for any purpose, without the expressed permission of LU-VE Group. Nor may it be used in any other way or for any other purpose than expressly permitted by LU-VE Group. LU-VE Group will enforce its rights related to this document to the fullest extent of the law, including the seeking of criminal prosecution.

				date	05/12/2022
				User	davide.pinato
01	Indication of power terminal blocks	05/12/2022	DPAA	Proved	PCIA
Status	change	date	name		

HEADING PAGE

Document number: 80025789-01

Sheet 1

Sh. 6

INDEX

Sheet	Description
1	HEADING PAGE
2	INDEX
3	UNIT LAYOUT
4	SWITCH LAYOUT
5	CB LAYOUT
6	AC MOTORS POWER CONNECTION

REVISION

N°	Date	Description
0	03/09/2021	Emission
1	05/12/2022	Indication of power terminal blocks

This document and its contents is owned by LU-VE Group or its affiliates and protected by laws governing intellectual property and thereto related rights. Without limiting any rights related to this document, no part of this document may be copied, reproduced or transmitted in any form or by any means (electronic, mechanical, photocopying, recording, or otherwise), or for any purpose, without the expressed permission of LU-VE Group. Nor may it be used in any other way or for any other purpose than expressly permitted by LU-VE Group. LU-VE Group will enforce its rights related to this document to the fullest extent of the law, including the seeking of criminal prosecution.

				date	05/12/2022
				User	davide.pinato
01	Indication of power terminal blocks	05/12/2022	DPAA	Proved	PCIA
Status	change	date	name		

ALFA LU-VE

INDEX

Document number: 80025789-01

Sheet 2
Sh. 6

UNIT LAYOUT
(Front View)

Left unit

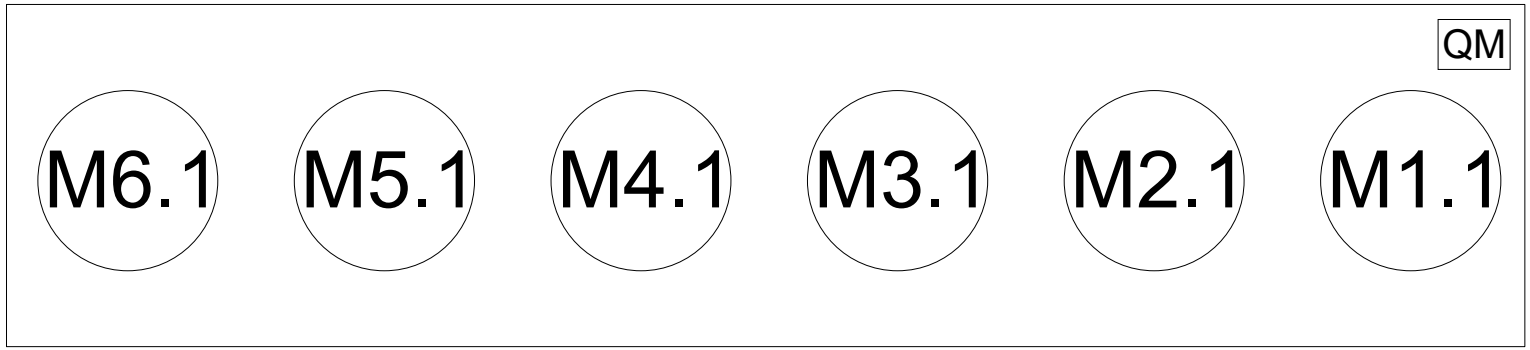

Right unit

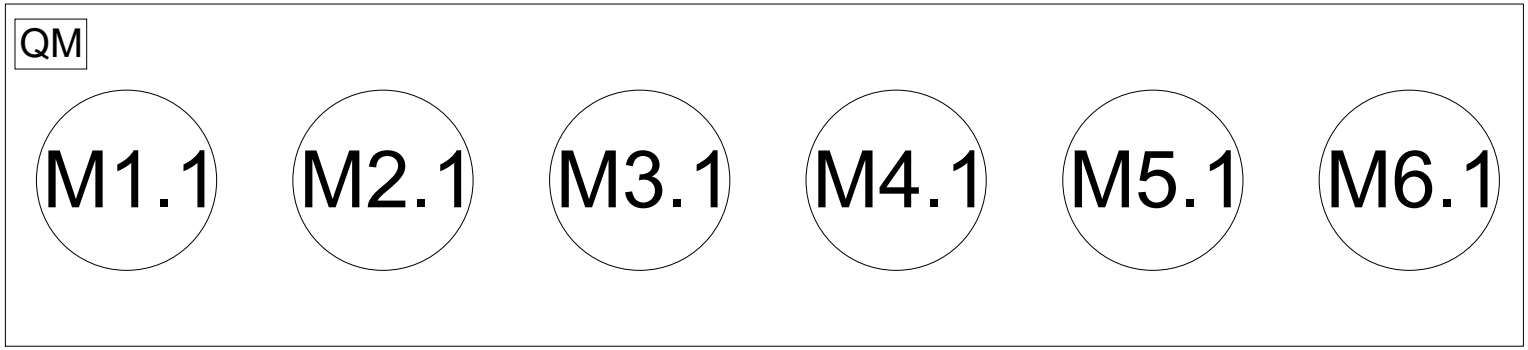

NOTE: The drawing does not indicate the correct position of components

This document and its contents is owned by LU-VE Group or its affiliates and protected by laws governing intellectual property and thereto related rights. Without limiting any rights related to this document, no part of this document may be copied, reproduced or transmitted in any form or by any means (electronic, mechanical, photocopying, recording, or otherwise), or for any purpose, without the expressed permission of LU-VE Group. Nor may it be used in any other way or for any other purpose than expressly permitted by LU-VE Group. LU-VE Group will enforce its rights related to this document to the fullest extent of the law, including the seeking of criminal prosecution.

				date	05/12/2022
				User	davide.pinato
01	Indication of power terminal blocks	05/12/2022	DPAA	Proved	PCIA
Status	change	date	name		

ALFA LU-VE

UNIT LAYOUT

Document number: 80025789-01

Sheet 3
Sh. 6

QM

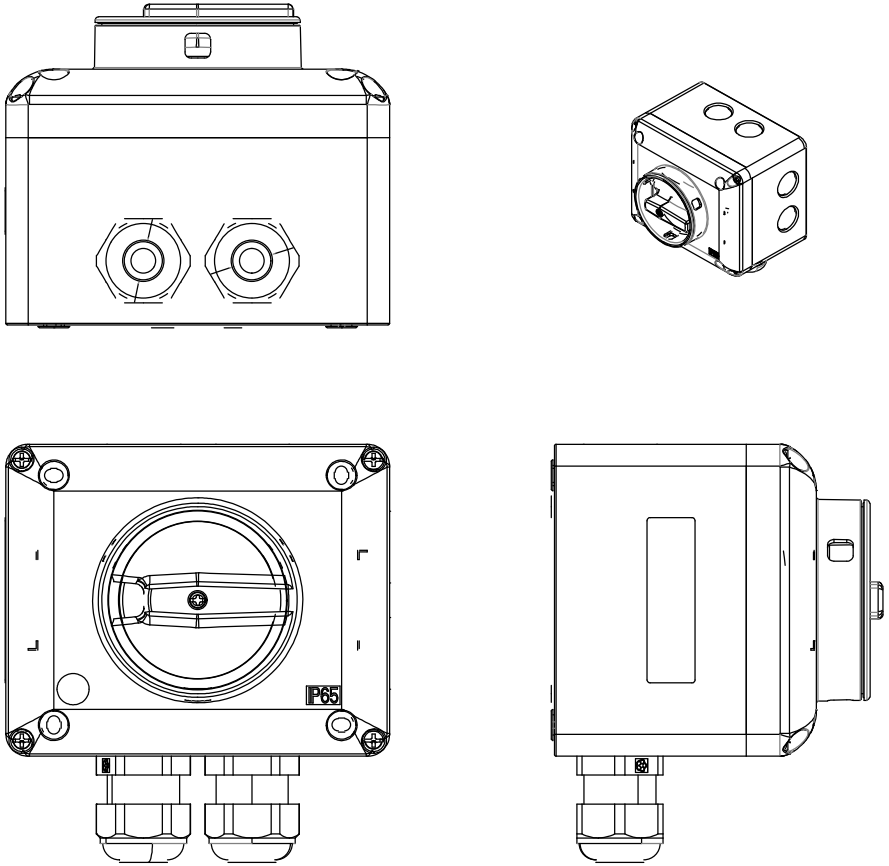

Technical data

Material: Polycarbonate
IP protection class: IP65
Color: Grey/Black
Rated insulation voltage: 690V
Rated operational current:16A
Ambient temperature: until -40°C

This document and its contents is owned by LU-VE Group or its affiliates and protected by laws governing intellectual property and thereto related rights. Without limiting any rights related to this document, no part of this document may be copied, reproduced or transmitted in any form or by any means (electronic, mechanical, photocopying, recording, or otherwise), or for any purpose, without the expressed permission of LU-VE Group. Nor may it be used in any other way or for any other purpose than expressly permitted by LU-VE Group. LU-VE Group will enforce its rights related to this document to the fullest extent of the law, including the seeking of criminal prosecution.

				date	05/12/2022
				User	davide.pinato
01	Indication of power terminal blocks	05/12/2022	DPAA	Proved	PCIA
Status	change	date	name		

ALFA LU-VE

SWITCH LAYOUT

Document number: 80025789-01

Sheet 4
Sh. 6

CB1

CONNECTION BOX FOR 3PH GENERAL SWITCH

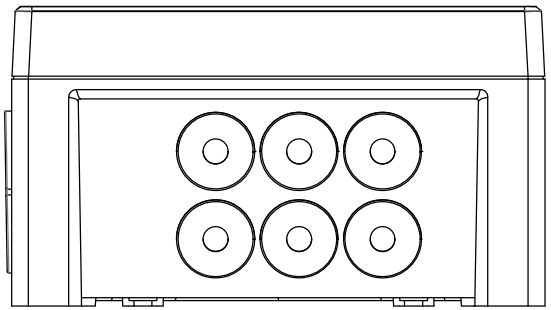

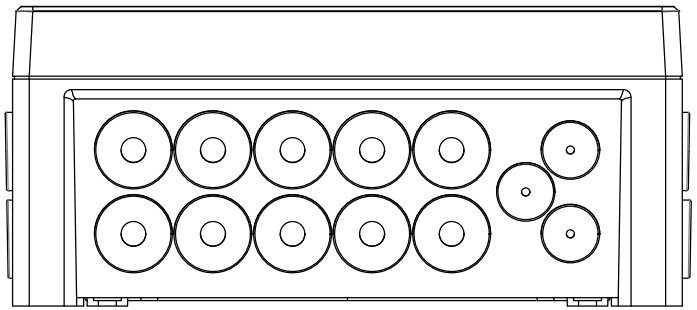

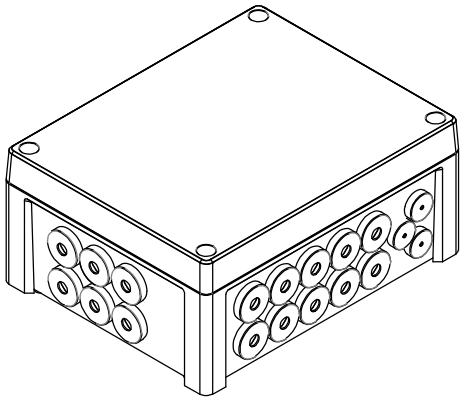

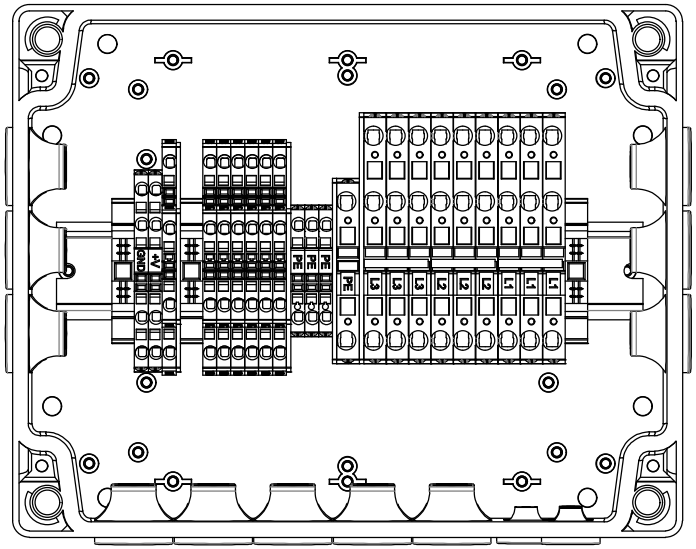

Technical data:

Material:ABS
IP protection class:IP65
Color:RAL7035
Ambient temperature:-40/+80°C
Dimensions:240x190x110mm

This document and its contents is owned by LU-VE Group or its affiliates and protected by laws governing intellectual property and thereto related rights. Without limiting any rights related to this document, no part of this document may be copied, reproduced or transmitted in any form or by any means (electronic, mechanical, photocopying, recording, or otherwise), or for any purpose, without the expressed permission of LU-VE Group. Nor may it be used in any other way or for any other purpose than expressly permitted by LU-VE Group. LU-VE Group will enforce its rights related to this document to the fullest extent of the law, including the seeking of criminal prosecution.

				date	05/12/2022
				User	davide.pinato
01	Indication of power terminal blocks	05/12/2022	DPAA	Proved	PCIA
Status	change	date	name		

ALFA LU-VE

CB LAYOUT

Document number: 80025789-01

Sheet 5
Sh. 6

AC MOTORS POWER CONNECTION
3-phase motors

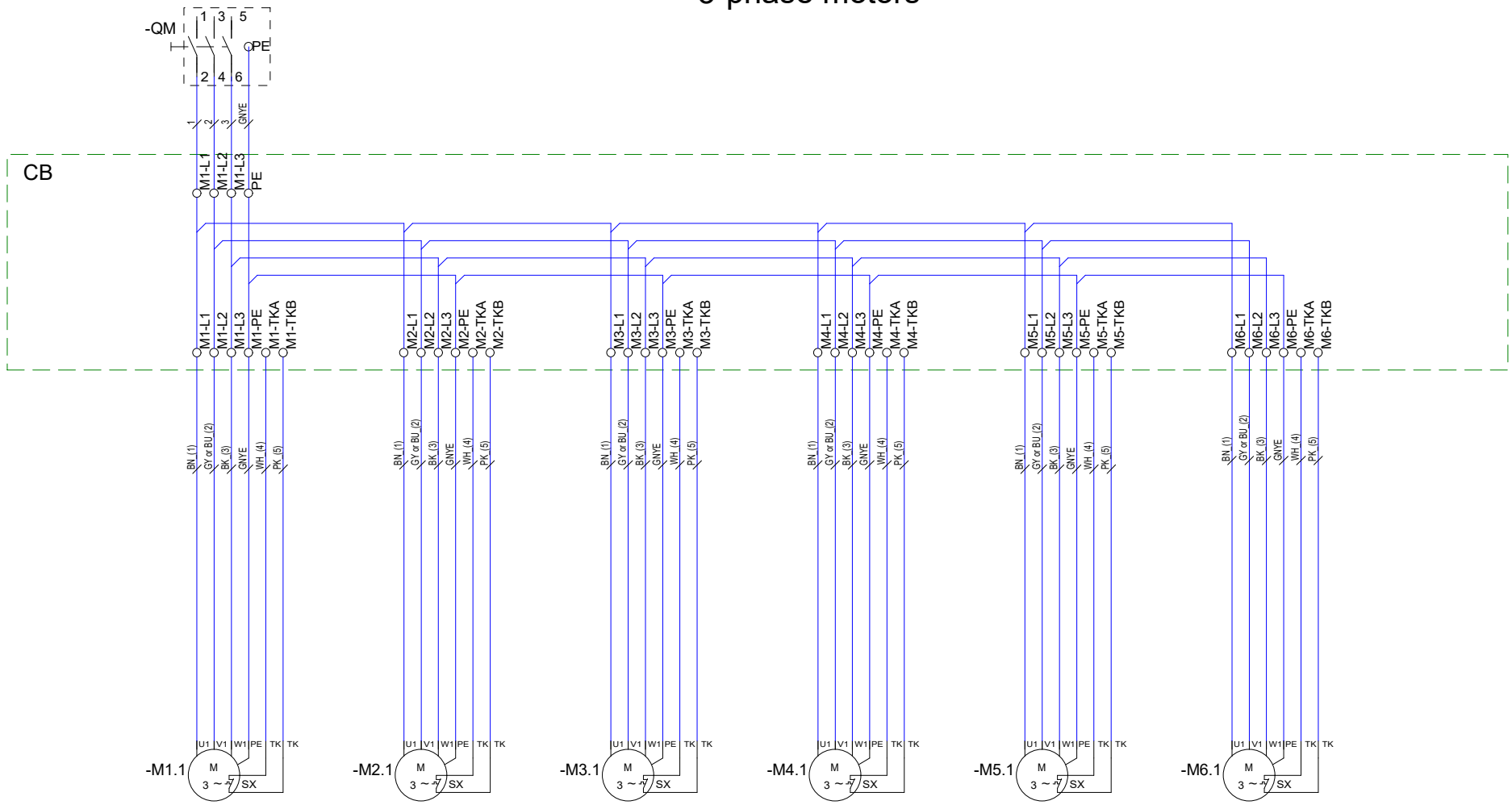

NOTE: switch for maintenance before motors are optional
fans number according to unit datasheet

This document and its contents is owned by LU-VE Group or its affiliates and protected by laws governing intellectual property and thereto related rights. Without limiting any rights related to this document, no part of this document may be copied, reproduced or transmitted in any form or by any means (electronic, mechanical, photocopying, recording, or otherwise), or for any purpose, without the expressed permission of LU-VE Group. Nor may it be used in any other way or for any other purpose than expressly permitted by LU-VE Group. LU-VE Group will enforce its rights related to this document to the fullest extent of the law, including the seeking of criminal prosecution.

				date	05/12/2022
				User	davide.pinato
01	Indication of power terminal blocks	05/12/2022	DPAA	Proved	PCIA
Status	change	date	name		

ALFA LU-VE

AC MOTORS POWER CONNECTION
3-phase motors

Document number: 80025789-01

Sheet 6
Sh. 6