Switch connection ISD

drawing number: 80030791

alfa.luvegroup.com

BOARD RATED VALUE	
VOLTAGE DC	---
VOLTAGE AC	400 - 230 Vac ± 10%
FREQUENCY	50 - 60 Hz ± 2%
POWER MAX	
SHORT CIRCUIT CURRENT (Icc)	
IP DEGREE WITH CLOSED DOORS	IP66
IP DEGREE WITH OPENED DOORS	IP20

This document and its contents is owned by LU-VE Group or its affiliates and protected by laws governing intellectual property and thereto related rights. Without limiting any rights related to this document, no part of this document may be copied, reproduced or transmitted in any form or by any means (electronic, mechanical, photocopying, recording, or otherwise), or for any purpose, without the expressed permission of LU-VE Group. Nor may it be used in any other way or for any other purpose than expressly permitted by LU-VE Group. LU-VE Group will enforce its rights related to this document to the fullest extent of the law, including the seeking of criminal prosecution.

				date	10/07/2022
				User	davide.pinato
01	New indication of colour conductors	01/07/2022		Proved	PCIA
Status	change	date	name		

HEADING PAGE

DPAA

Document number: 80030791-01

Sheet 1

Sh. 5

INDEX

Sheet	Description
1	HEADING PAGE
2	INDEX
3	SWITCH TECHNICAL DATA
4	UNIT LAYOUT
5	MOTOR - SWITCH CONNECTION

REVISION

N°	Date	Description
0	15/06/2022	Emission
1	10/07/2022	New indication of colour conductors

This document and its contents is owned by LU-VE Group or its affiliates and protected by laws governing intellectual property and thereto related rights. Without limiting any rights related to this document, no part of this document may be copied, reproduced or transmitted in any form or by any means (electronic, mechanical, photocopying, recording, or otherwise), or for any purpose, without the expressed permission of LU-VE Group. Nor may it be used in any other way or for any other purpose than expressly permitted by LU-VE Group. LU-VE Group will enforce its rights related to this document to the fullest extent of the law, including the seeking of criminal prosecution.

				date	10/07/2022
				User	davide.pinato
01	New indication of colour conductors	01/07/2022		Proved	PCIA
Status	change	date	name		

ALFA LU-VE

INDEX

DPAA

Document number: 80030791-01

Sheet 2

Sh. 5

Q1.1 - Q8.1

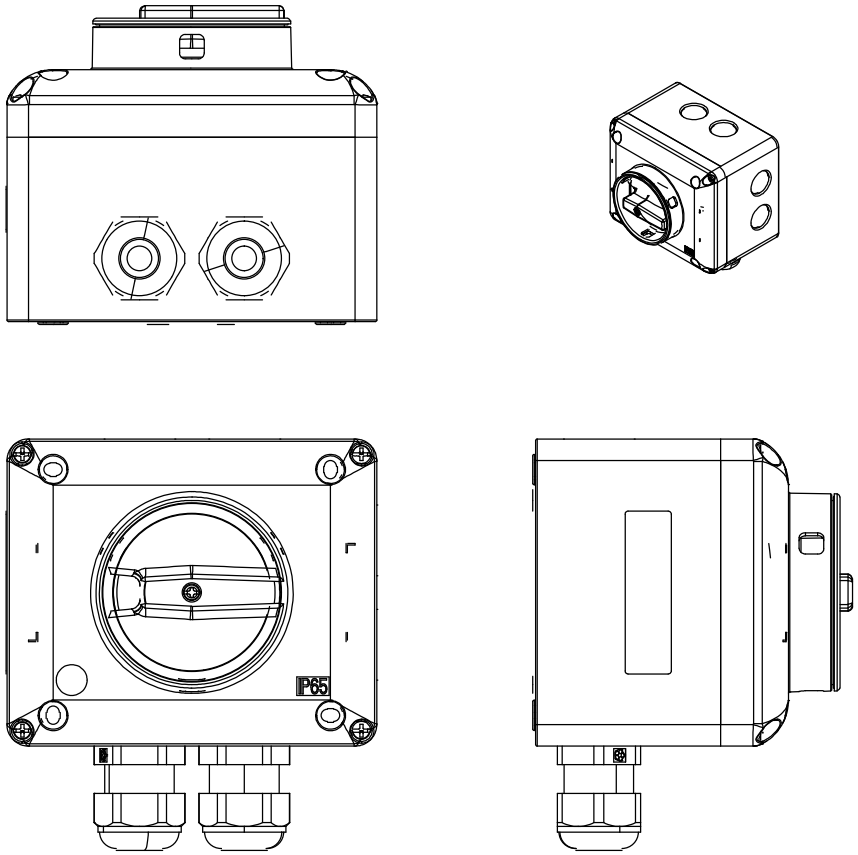

Technical data

Material: Polycarbonate
IP protection class: IP65
Color: Grey/Black
Rated insulation voltage: 690V
Rated operational current:16A
Ambient temperature: until -40°C

This document and its contents is owned by LU-VE Group or its affiliates and protected by laws governing intellectual property and thereto related rights. Without limiting any rights related to this document, no part of this document may be copied, reproduced or transmitted in any form or by any means (electronic, mechanical, photocopying, recording, or otherwise), or for any purpose, without the expressed permission of LU-VE Group. Nor may it be used in any other way or for any other purpose than expressly permited by LU-VE Group. LU-VE Group will enforce its rights related to this document to the fullest extent of the law, including the seeking of criminal prosecution.

				date	10/07/2022
				User	davide.pinato
01	New indication of colour conductors	01/07/2022		Proved	PCIA
Status	change	date	name		

ALFA LU-VE

SWITCH TECHNICAL DATA

DPAA

Document number: 80030791-01

Sheet 3
Sh. 5

UNIT LAYOUT
(Front View)

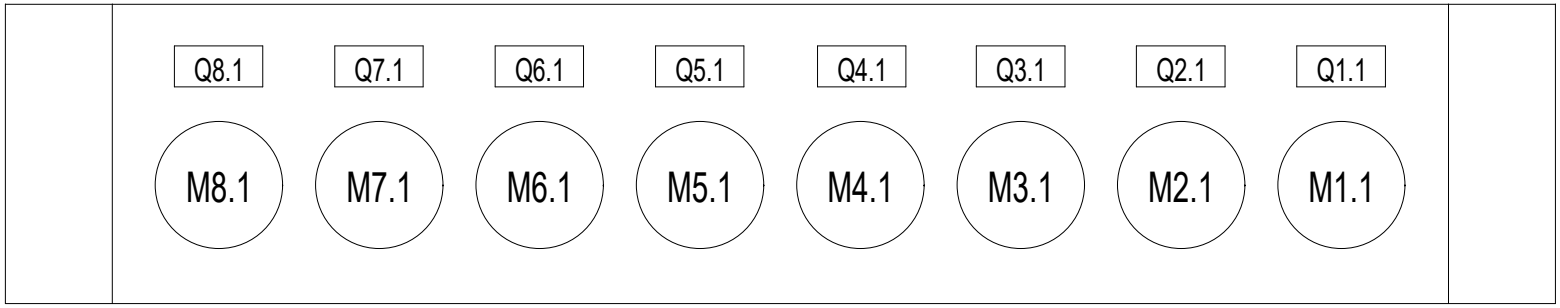

NOTE: The drawing does not indicate the correct position of components

This document and its contents is owned by Alfa LU-VE Group or its affiliates and protected by laws governing intellectual property and thereto related rights. Without limiting any rights related to this document, no part of this document may be copied, reproduced or transmitted in any form or by any means (electronic, mechanical, photocopying, recording, or otherwise), or for any purpose, without the expressed permission of Alfa LU-VE Group. No rights to use, share and distribute this document in any other way or for any other purpose are granted by Alfa LU-VE Group. Alfa LU-VE Group will enforce its rights related to this document to the fullest extent of the law, including the seeking of criminal prosecution.

				date	10/07/2022
				User	davide.pinato
01	New indication of colour conductors	01/07/2022		Proved	PCIA
Status	change	date	name		

ALFA LU-VE

UNIT LAYOUT

DPAA

Document number: 80030791-01

Sheet 4

Sh. 5

AC MOTOR POWER SWITCH CONNECTION

3-phase

ISD

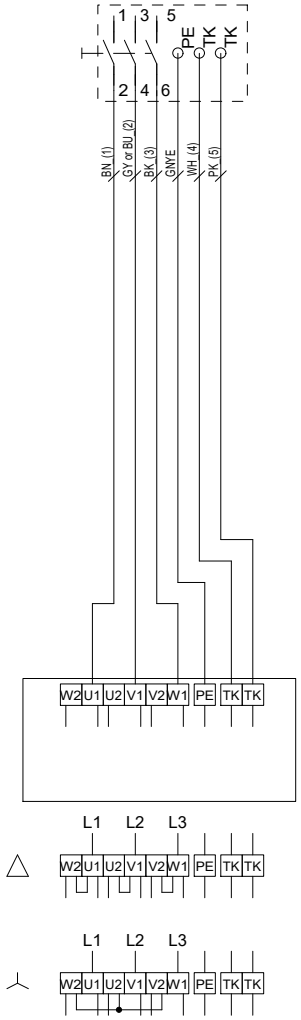

1-phase

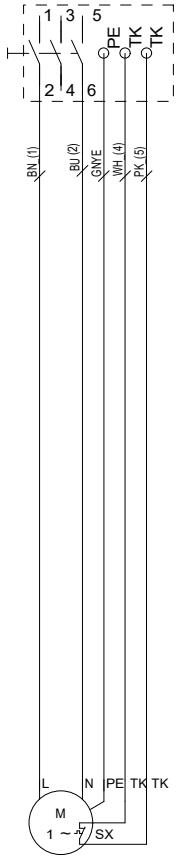

NOTE: same connection for each motor
NOTE: for single phase AC motors that have not terminals for TK, don't connect the conductors white and pink.
for these type of motors, the TK are connected internally to the motor.

EC MOTOR POWER SWITCH CONNECTION

3-phase

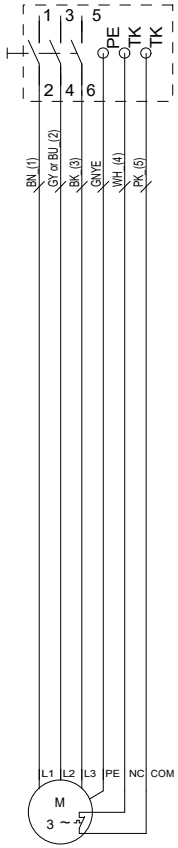

1-phase

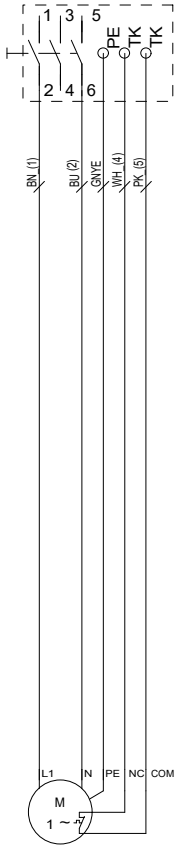

NOTE: TK equivalence for EC motors: - 11-14 for Ziehl-Abegg
- COM-NC for EBM-Papst

This document and its contents is owned by LU-VE Group or its affiliates and protected by laws governing intellectual property and thereto related rights. Without limiting any rights related to this document, no part of this document may be copied, reproduced or transmitted in any form or by any means (electronic, mechanical, photocopying, recording, or otherwise), or for any purpose, without the expressed permission of LU-VE Group. Nor may it be used in any other way or for any other purpose than expressly permitted by LU-VE Group. LU-VE Group will enforce its rights related to this document to the fullest extent of the law, including the seeking of criminal prosecution.

				date	10/07/2022
				User	davide.pinato
01	New indication of colour conductors	01/07/2022		Proved	PCIA
Status	change	date	name		

ALFA LU-VE

MOTOR - SWITCH CONNECTION

DPAA

Document number: 80030791-01

Sheet 5
Sh. 5