# EC connection for 1÷18 motors
# Master/slave configuration

drawing number: 9460153460

This document and its contents is owned by LU-VE Group or its affiliates and protected by laws governing intellectual property and thereto related rights. Without limiting any rights related to this document, no part of this document may be copied, reproduced or transmitted in any form or by any means (electronic, mechanical, photocopying, recording, or otherwise), or for any purpose, without the expressed permission of LU-VE Group. Nor may it be used in any other way or for any other purpose than expressly permitted by LU-VE Group. LU-VE Group will enforce its rights related to this document to the fullest extent of the law, including the seeking of criminal prosecution.

ALFA LU-VE

alfa.luvegroup.com

| BOARD RATED VALUE | |
|---|---|
| VOLTAGE DC | --- |
| VOLTAGE AC | 400 Vac ± 10% |
| FREQUENCY | 50 - 60 Hz ± 2% |
| POWER MAX | |
| SHORT CIRCUIT CURRENT (Icc) | |
| IP DEGREE WITH CLOSED DOORS | IP54 |
| IP DEGREE WITH OPENED DOORS | IP20 |
| | |

| | | | | | |
|---|---|---|---|---|---|
| 03 | New brand | 18/12/2019 | PCIA | date | 18/12/2019 |
| 02 | Changed labels and added layout | 03/07/2017 | PCIA | User | ITALPCIA |
| 01 | EBM electronic interface | 27/05/2016 | DRI | Proved | D.R. |
| Status | change | date | name | | |

ALFA LU-VE

HEADING PAGE

Document number: 9460153460-03

Sheet 1

Sh. 17

# INDEX

| Sheet | Description |
|---|---|
| 1 | HEADING PAGE |
| 2 | INDEX AND REVISION |
| 3 | GRAPHICAL SYMBOL LIST |
| 4 | UNIT LAYOUT |
| 5 | SWITCH LAYOUT |
| 6 | CONNECTION BOX LAYOUT |
| 7 | CONNECTION BOX LAYOUT |
| 8 | CONNECTION BOX LAYOUT |
| 9 | CONNECTION BOX LAYOUT |
| 10 | MASTER CONTROLLER LAYOUT |
| 11 | CONTROL PANEL POWER SUPPLY |
| 12 | CONTROL PANEL POWER SUPPLY |
| 13 | SIGNAL CONNECTION |
| 14 | SIGNAL CONNECTION |
| 15 | SIGNAL CONNECTION |
| 16 | SIGNAL CONNECTION |
| 17 | SIGNAL CONNECTION |

# REVISION

| N° | Date | Description |
|---|---|---|
| 0 | 22/04/2016 | Emission |
| 1 | 27/05/2016 | EBM electronic interface |
| 2 | 03/07/2017 | Changed labels and added layout |
| 3 | 18/12/2019 | New brand |

This document and its contents is owned by LU-VE Group or its affiliates and protected by laws governing intellectual property and thereto related rights. Without limiting any rights related to this document, no part of this document may be copied, reproduced or transmitted in any form or by any means (electronic, mechanical, photocopying, recording, or otherwise), or for any purpose, without the expressed permission of LU-VE Group. Nor may it be used in any other way or for any other purpose than expressly permitted by LU-VE Group. LU-VE Group will enforce its rights related to this document to the fullest extent of the law, including the seeking of criminal prosecution.

| | | | | | |
|---|---|---|---|---|---|
| 03 | New brand | 18/12/2019 | PCIA | date | 18/12/2019 |
| 02 | Changed labels and added layout | 03/07/2017 | PCIA | User | ITALPCIA |
| 01 | EBM electronic interface | 27/05/2016 | DRI | Proved | D.R. |
| Status | change | date | name | | |

ALFA LU-VE

INDEX AND REVISION

Document number: 9460153460-03

Sheet 2
Sh. 17

| | | | | | | | |
|---|---|---|---|---|---|---|---|
| | ELECTRIC MOTOR | | THERMAL PROTECTION CONTROL | | RESISTOR | | MANUALLY OPERATED SWITCH |
| | TERMINALS | | CONVERTER | | VARIABLE RESISTOR | | MAINTENANCE SWITCH |
| | EARTHING | | ELECTRONIC MOTOR | | HEATER | | OPEN CONTACT |
| | WIRES CONNECTION | | CUT-PHASE SPEED CONTROLLER SINGLE PHASE | | VOLTAGE TRANSFORMER | | CLOSED CONTACT |
| | T-CONNECTION | | CUT-PHASE SPEED CONTROLLER THREE PHASE | | PLUG AND SOCKET | | CHANGEOVER CONTACT |
| | SERIE CONNECTION | | MASTER CONTROLLER EC REGULATOR | | FEMALE CONTACT (OF A SOCKET OR PLUG) | | MAKE CONTACT, DELAYED WHEN THE DEVICE CONTAINING THE CONTACT IS BEING ACTIVATED |
| | PARALLEL CONNECTION | | SAFETY OR EMERGENCY CONTROL WITH MUSHROOM PUSH-BUTTON | | MALE CONTACT (OF A SOCKET OR PLUG) | | BREAK CONTACT, DELAYED WHEN THE DEVICE CONTAINING THE CONTACT IS BEING DE-ACTIVATED |
| | ROTATIVE CONTROL | | KEY CONTROL | | PUSH-BUTTON CONTROL | | PUSH-BUTTON CONTROL |

This document and its contents is owned by LU-VE Group or its affiliates and protected by laws governing intellectual property and thereto related rights. Without limiting any rights related to this document, no part of this document may be copied, reproduced or transmitted in any form or by any means (electronic, mechanical, photocopying, recording, or otherwise), or for any purpose, without the expressed permission of LU-VE Group. Nor may it be used in any other way or for any other purpose than expressly permitted by LU-VE Group. LU-VE Group will enforce its rights related to this document to the fullest extent of the law, including the seeking of criminal prosecution.

| | | | | | |
|---|---|---|---|---|---|
| 03 | New brand | 18/12/2019 | PCIA | date | 18/12/2019 |
| 02 | Changed labels and added layout | 03/07/2017 | PCIA | User | ITALPCIA |
| 01 | EBM electronic interface | 27/05/2016 | DRI | Proved | D.R. |
| Status | change | date | name | | |

ALFA LU-VE

# GRAPHICAL SYMBOL LIST

Document number: 9460153460-03

Sheet 3
Sh. 17

# UNIT LAYOUT

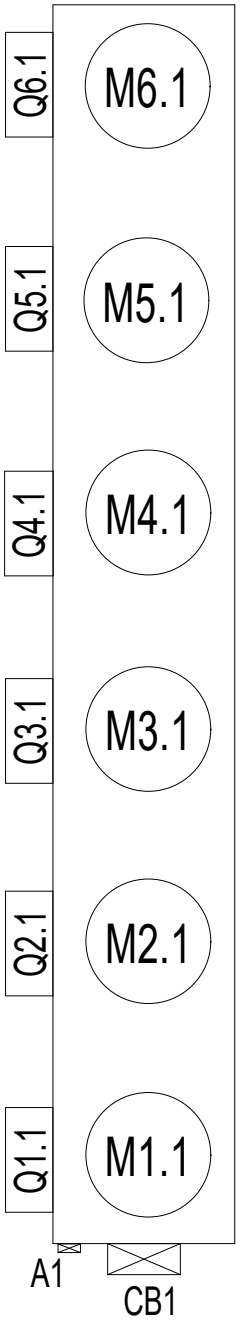


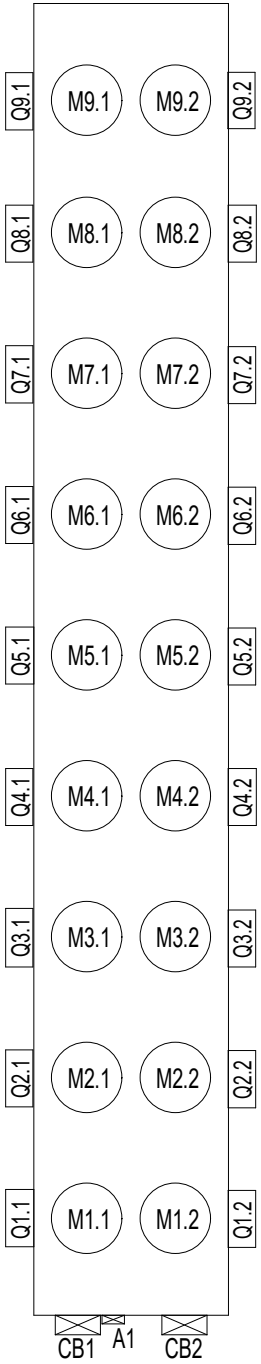


NOTE: The drawing does not indicate the correct position of components

This document and its contents is owned by LU-VE Group or its affiliates and protected by laws governing intellectual property and thereto related rights. Without limiting any rights related to this document, no part of this document may be copied, reproduced or transmitted in any form or by any means (electronic, mechanical, photocopying, recording, or otherwise), or for any purpose, without the expressed permission of LU-VE Group. Nor may it be used in any other way or for any other purpose than expressly permited by LU-VE Group. LU-VE Group will enforce its rights related to this document to the fullest extent of the law, including the seeking of criminal prosecution.

| | | | | | |
|---|---|---|---|---|---|
| 03 | New brand | 18/12/2019 | PCIA | date | 18/12/2019 |
| 02 | Changed labels and added layout | 03/07/2017 | PCIA | User | ITALPCIA |
| 01 | EBM electronic interface | 27/05/2016 | DRI | Proved | |
| Status | change | date | name | | |

ALFA LU-VE

UNIT LAYOUT

Document number: 9460153460-03

Sheet 4
Sh. 17

Q1.1 - Q9.1
Q1.2 - Q9.2

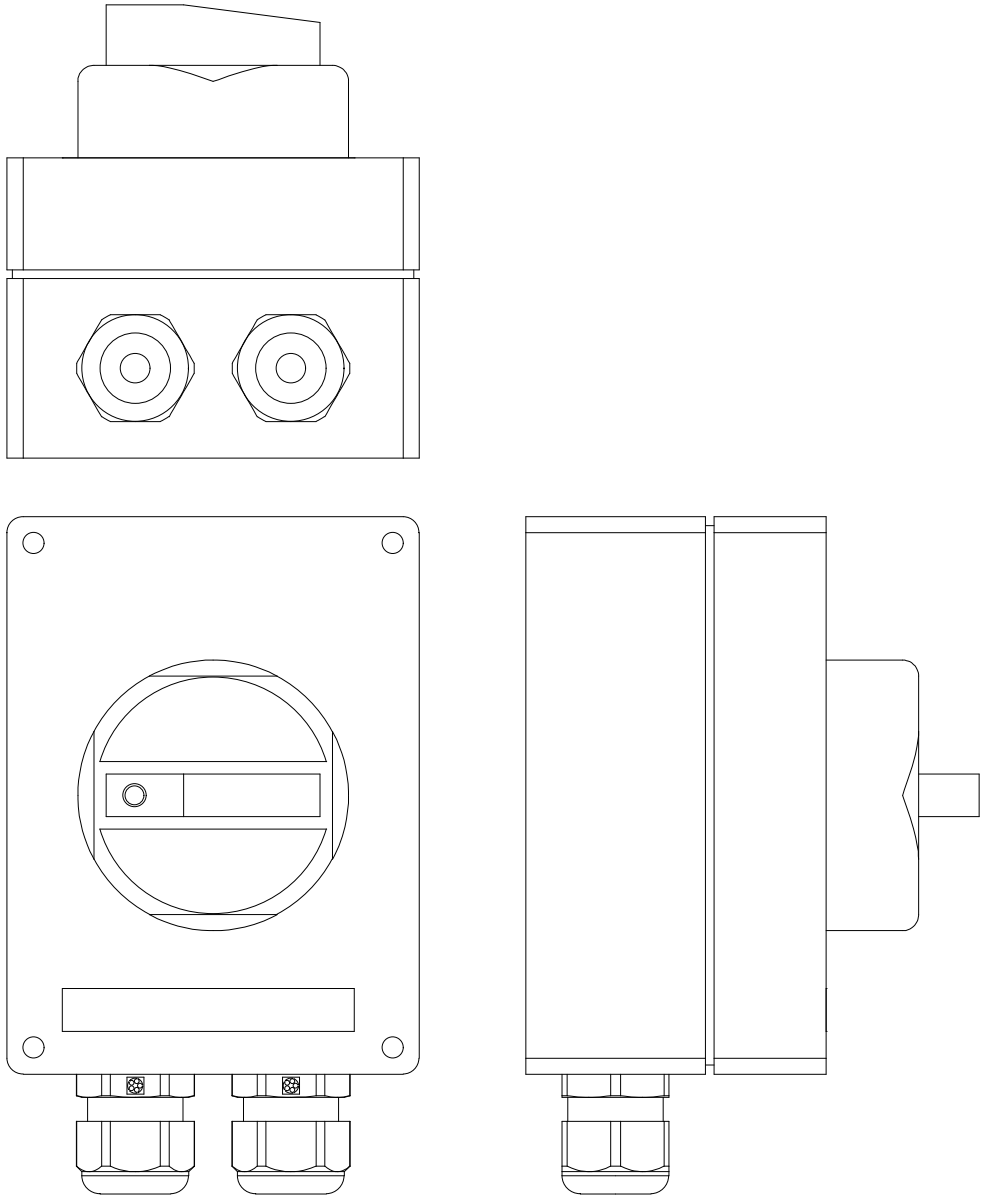

Technical data

Material: Polycarbonate
IP protection class: IP66
Color: Grey/black
Rated insulation voltage: 690V
Rated operational current: 16A
Ambient temperature: -40/+80°C

This document and its contents is owned by LU-VE Group or its affiliates and protected by laws governing intellectual property and thereto related rights. Without limiting any rights related to this document, no part of this document may be copied, reproduced or transmitted in any form or by any means (electronic, mechanical, photocopying, recording, or otherwise), or for any purpose, without the expressed permission of LU-VE Group. Nor may it be used in any other way or for any other purpose than expressly permitted by LU-VE Group. LU-VE Group will enforce its rights related to this document to the fullest extent of the law, including the seeking of criminal prosecution.

| | | | | | |
|---|---|---|---|---|---|
| 03 | New brand | 18/12/2019 | PCIA | date | 18/12/2019 |
| 02 | Changed labels and added layout | 03/07/2017 | PCIA | User | ITALPCIA |
| 01 | EBM electronic interface | 27/05/2016 | DRI | Proved | |
| Status | change | date | name | | |

ALFA LU-VE

SWITCH LAYOUT

Document number: 9460153460-03

Sheet 5
Sh. 17

# CB1 - CB2

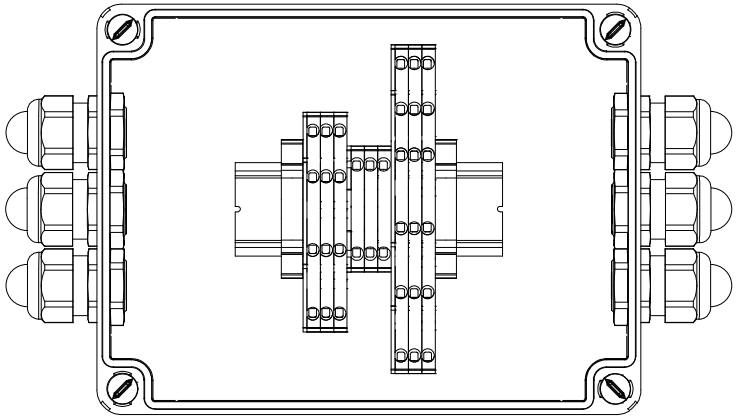

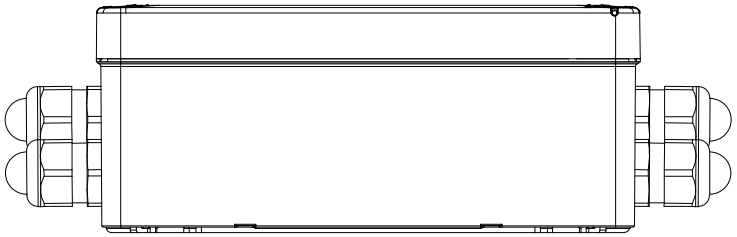

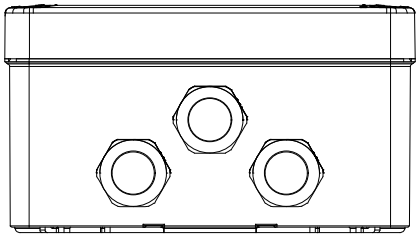

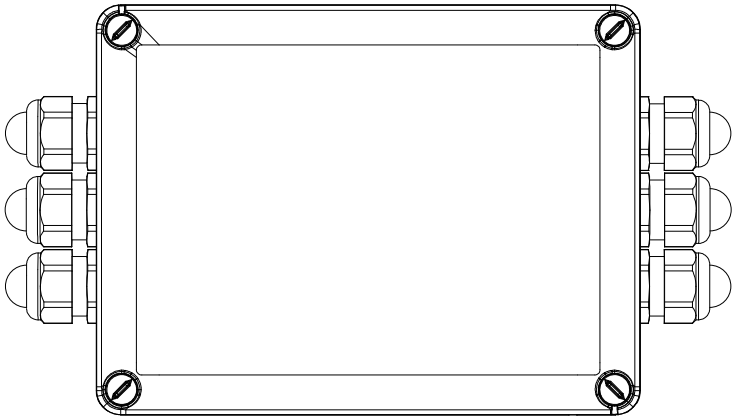

Technical data

Material: Polycarbonate
IP protection class: IP56
Color: RAL7035
Rated insulation voltage: 750V
Ambient temperature: -25/+60°C
Dimensions: 190x140x70 mm

This document and its contents is owned by LU-VE Group or its affiliates and protected by laws governing intellectual property and thereto related rights. Without limiting any rights related to this document, no part of this document may be copied, reproduced or transmitted in any form or by any means (electronic, mechanical, photocopying, recording, or otherwise), or for any purpose, without the expressed permission of LU-VE Group. Nor may it be used in any other way or for any other purpose than expressly permitted by LU-VE Group. LU-VE Group will enforce its rights related to this document to the fullest extent of the law, including the seeking of criminal prosecution.

| | | | | | |
|---|---|---|---|---|---|
| 03 | New brand | 18/12/2019 | PCIA | date | 18/12/2019 |
| 02 | Changed labels and added layout | 03/07/2017 | PCIA | User | ITALPCIA |
| 01 | EBM electronic interface | 27/05/2016 | DRI | Proved | |
| Status | change | date | name | | |

ALFA LU-VE

CONNECTION BOX LAYOUT
3 FANS - 3 PHASE

Document number: 9460153460-03

Sheet 6
Sh. 17

# CB1 - CB2

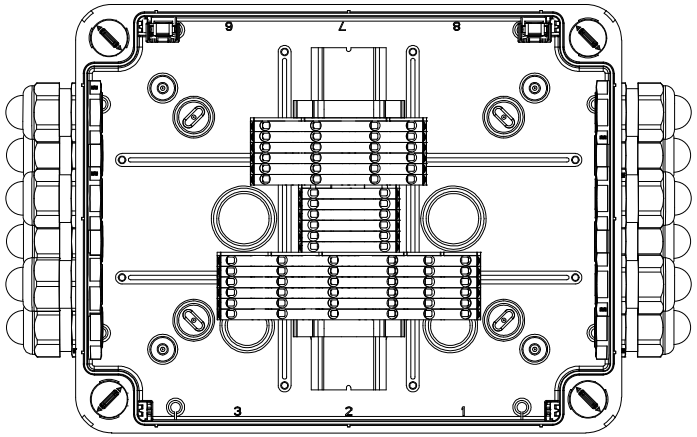


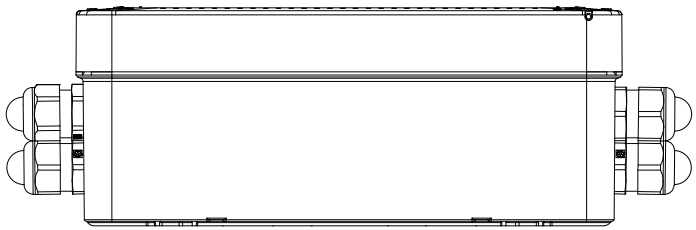

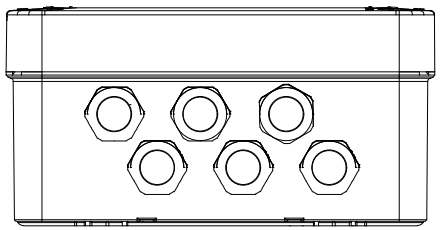

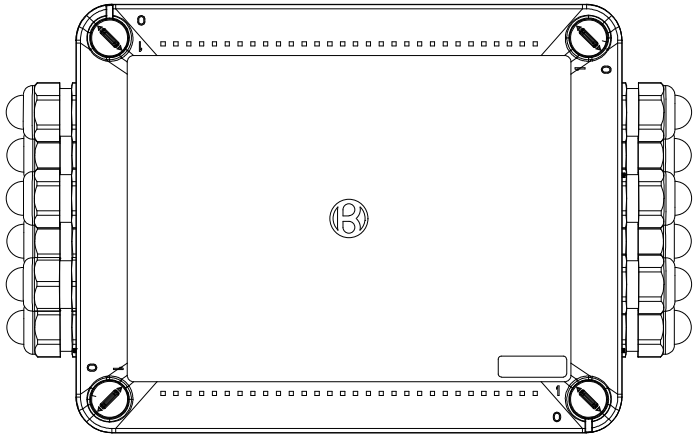

Technical data

Material: Polycarbonate
IP protection class: IP56
Color: RAL7035
Rated insulation voltage: 750V
Ambient temperature: -25/+60°C
Dimensions: 240x190x90 mm

This document and its contents is owned by LU-VE Group or its affiliates and protected by laws governing intellectual property and thereto related rights. Without limiting any rights related to this document, no part of this document may be copied, reproduced or transmitted in any form or by any means (electronic, mechanical, photocopying, recording, or otherwise), or for any purpose, without the expressed permission of LU-VE Group. Nor may it be used in any other way or for any other purpose than expressly permitted by LU-VE Group. LU-VE Group will enforce its rights related to this document to the fullest extent of the law, including the seeking of criminal prosecution.

| | | | | | |
|---|---|---|---|---|---|
| 03 | New brand | 18/12/2019 | PCIA | date | 18/12/2019 |
| 02 | Changed labels and added layout | 03/07/2017 | PCIA | User | ITALPCIA |
| 01 | EBM electronic interface | 27/05/2016 | DRI | Proved | |
| Status | change | date | name | | |

ALFA LU-VE

CONNECTION BOX LAYOUT
7 FANS - 3 PHASE

Document number: 9460153460-03

Sheet 7
Sh. 17

# CB1 - CB2

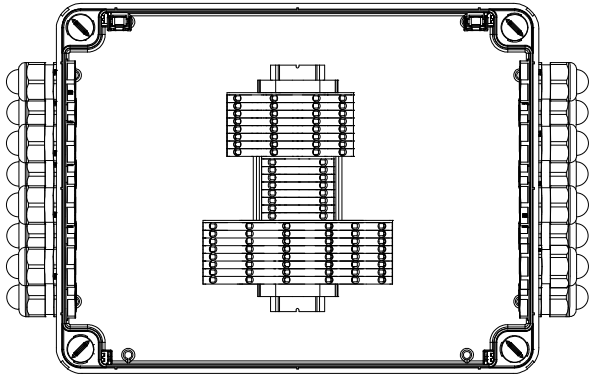

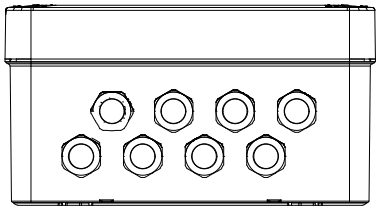

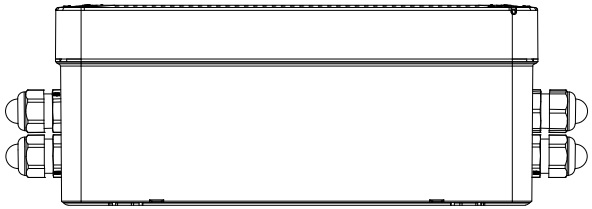

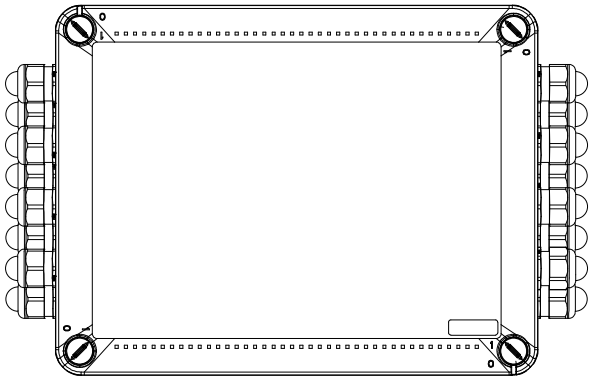

Technical data

Material: Polycarbonate
IP protection class: IP56
Color: RAL7035
Rated insulation voltage: 750V
Ambient temperature: -25/+60°C
Dimensions: 300x220x120 mm

This document and its contents is owned by LU-VE Group or its affiliates and protected by laws governing intellectual property and thereto related rights. Without limiting any rights related to this document, no part of this document may be copied, reproduced or transmitted in any form or by any means (electronic, mechanical, photocopying, recording, or otherwise), or for any purpose, without the expressed permission of LU-VE Group. Nor may it be used in any other way or for any other purpose than expressly permitted by LU-VE Group. LU-VE Group will enforce its rights related to this document to the fullest extent of the law, including the seeking of criminal prosecution.

| | | | | | |
|---|---|---|---|---|---|
| 03 | New brand | 18/12/2019 | PCIA | date | 18/12/2019 |
| 02 | Changed labels and added layout | 03/07/2017 | PCIA | User | ITALPCIA |
| 01 | EBM electronic interface | 27/05/2016 | DRI | Proved | |
| Status | change | date | name | | |

ALFA LU-VE

CONNECTION BOX LAYOUT
8 FANS - 3 PHASE

Document number: 9460153460-03

Sheet 8
Sh. 17

# CB1 - CB2

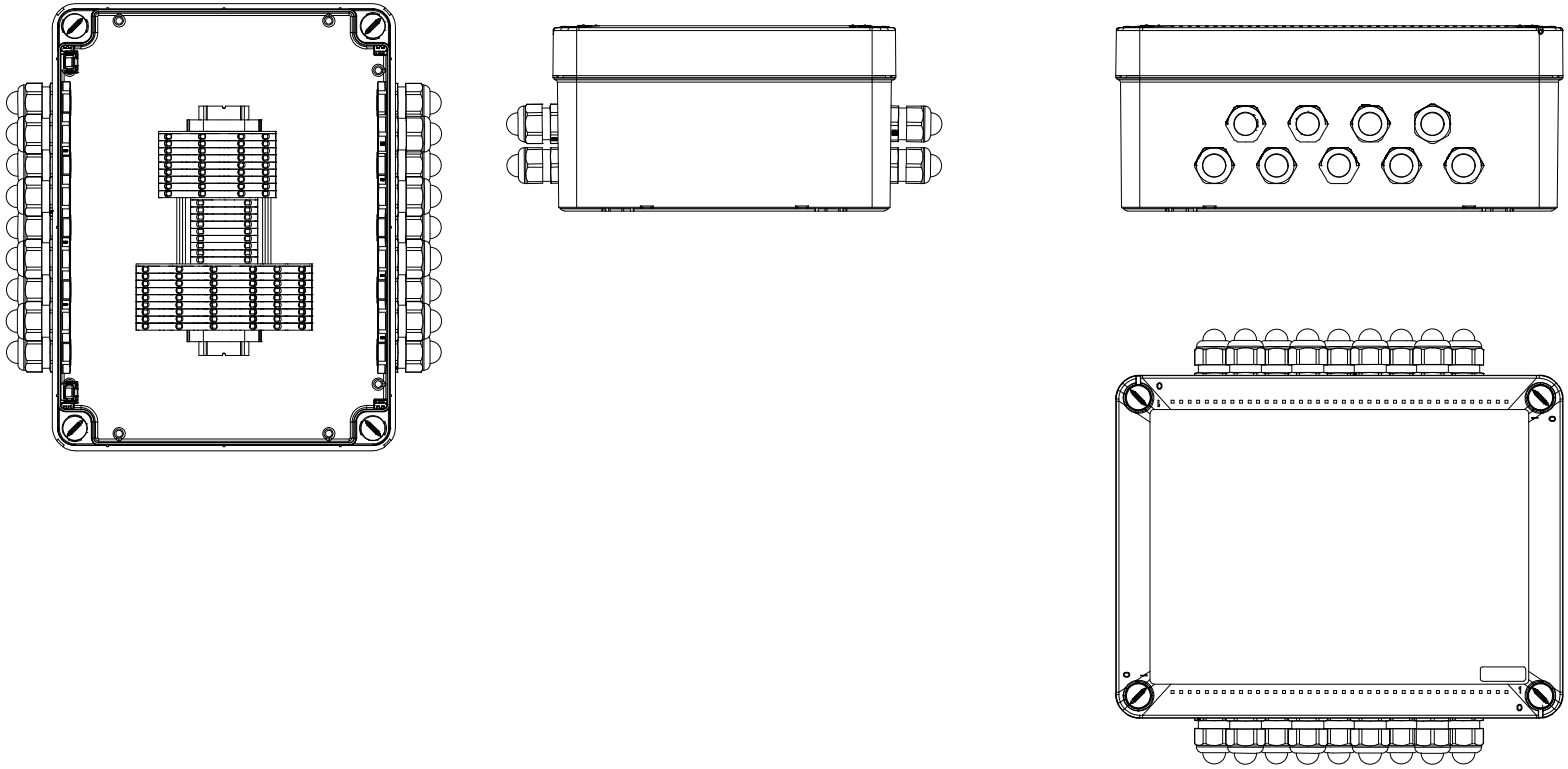

Technical data

Material: Polycarbonate
IP protection class: IP56
Color: RAL7035
Rated insulation voltage: 750V
Ambient temperature: -25/+60°C
Dimensions: 300x220x120 mm

This document and its contents is owned by LU-VE Group or its affiliates and protected by laws governing intellectual property and thereto related rights. Without limiting any rights related to this document, no part of this document may be copied, reproduced or transmitted in any form or by any means (electronic, mechanical, photocopying, recording, or otherwise), or for any purpose, without the expressed permission of LU-VE Group. Nor may it be used in any other way or for any other purpose than expressly permitted by LU-VE Group. LU-VE Group will enforce its rights related to this document to the fullest extent of the law, including the seeking of criminal prosecution.

| Status | change | date | name | | |
|---|---|---|---|---|---|
| 03 | New brand | 18/12/2019 | PCIA | date | 18/12/2019 |
| 02 | Changed labels and added layout | 03/07/2017 | PCIA | User | ITALPCIA |
| 01 | EBM electronic interface | 27/05/2016 | DRI | Proved | |

ALFA LU-VE

CONNECTION BOX LAYOUT
9 FANS - 1 PHASE

Document number: 9460153460-03

Sheet 9
Sh. 17

A1

# MASTER CONTROLLER PTec

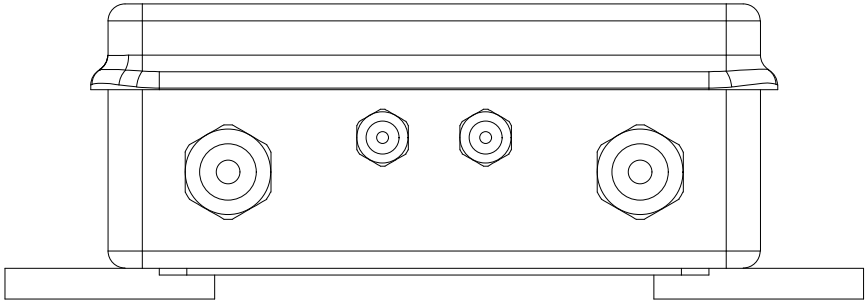

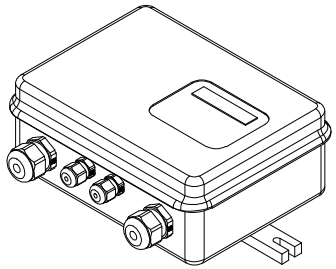

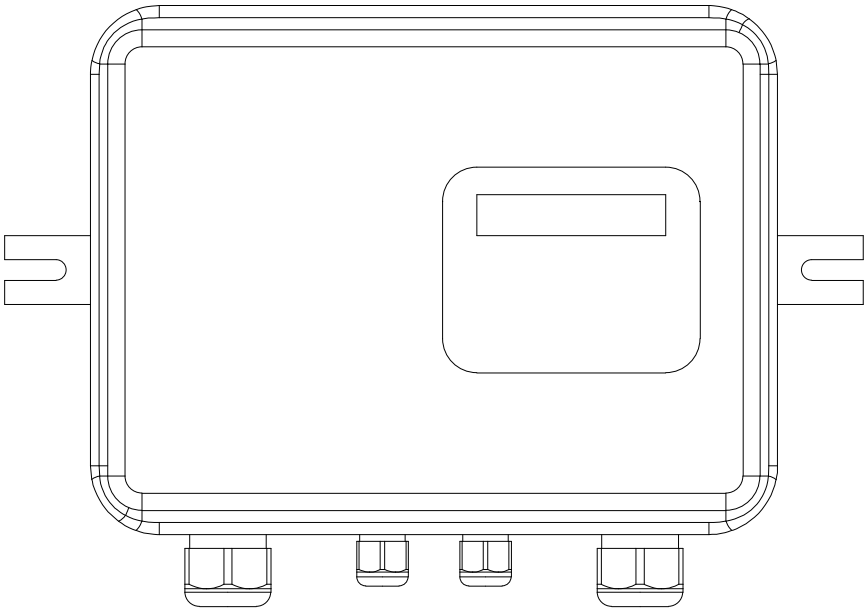

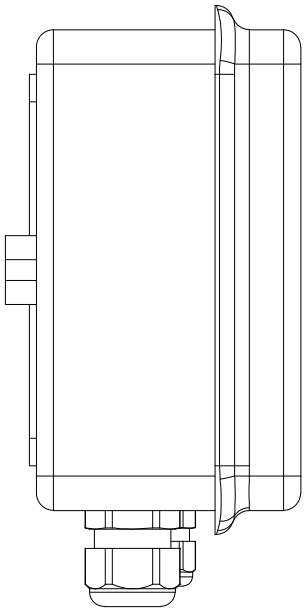

Technical data

Power Supply: 230/400Vac +10/-15%
Frequency: 50/60Hz
Power:MAX 8VA
Material: Polycarbonate
IP protection class: IP55
Color: Grey
Weight: 1.1kg
Dimension: 200x154x86

This document and its contents is owned by LU-VE Group or its affiliates and protected by laws governing intellectual property and thereto related rights. Without limiting any rights related to this document, no part of this document may be copied, reproduced or transmitted in any form or by any means (electronic, mechanical, photocopying, recording, or otherwise), or for any purpose, without the expressed permission of LU-VE Group. Nor may it be used in any other way or for any other purpose than expressly permitted by LU-VE Group. LU-VE Group will enforce its rights related to this document to the fullest extent of the law, including the seeking of criminal prosecution.

| | | | | | |
|---|---|---|---|---|---|
| 03 | New brand | 18/12/2019 | PCIA | date | 18/12/2019 |
| 02 | Changed labels and added layout | 03/07/2017 | PCIA | User | ITALPCIA |
| 01 | EBM electronic interface | 27/05/2016 | DRI | Proved | D.R. |
| Status | change | date | name | | |

ALFA LU-VE

MASTER CONTROLLER LAYOUT

Document number: 9460153460-03

Sheet 10
Sh. 17

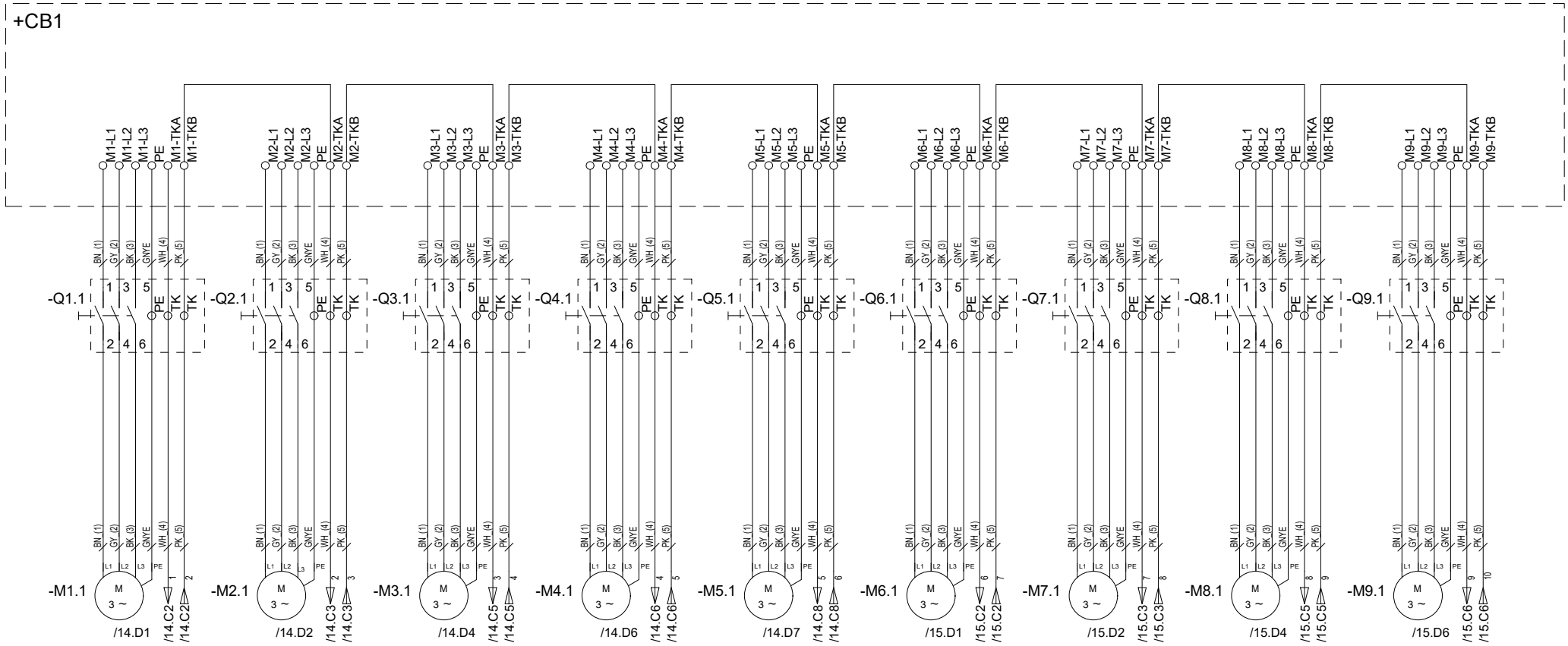


**NOTE: switch for maintenance before motors are optional**
**motors number according the order**
**cable alternative configuration in brackets**

This document and its contents is owned by LU-VE Group or its affiliates and protected by laws governing intellectual property and thereto related rights. Without limiting any rights related to this document, no part of this document may be copied, reproduced or transmitted in any form or by any means (electronic, mechanical, photocopying, recording, or otherwise), or for any purpose, without the expressed permission of LU-VE Group. Nor may it be used in any other way or for any other purpose than expressly permitted by LU-VE Group. LU-VE Group will enforce its rights related to this document to the fullest extent of the law, including the seeking of criminal prosecution.

| | | | | | |
|---|---|---|---|---|---|
| 03 | New brand | 18/12/2019 | PCIA | date | 18/12/2019 |
| 02 | Changed labels and added layout | 03/07/2017 | PCIA | User | ITALPCIA |
| 01 | EBM electronic interface | 27/05/2016 | DRI | Proved | D.R. |
| Status | change | date | name | | |

ALFA LU-VE

CONTROL PANEL POWER SUPPLY

Document number: 9460153460-03

Sheet 11
Sh. 17

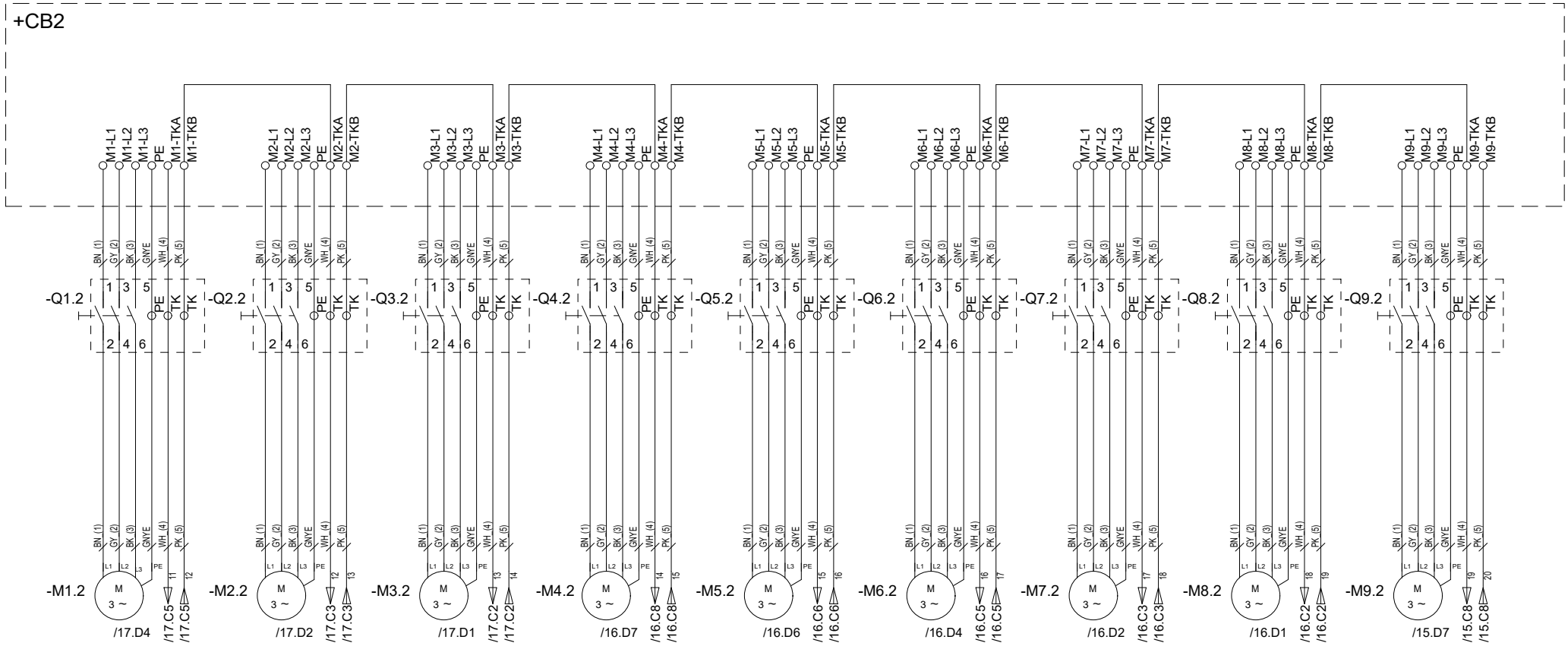


**NOTE: switch for maintenance before motors are optional**
**motors number according the order**
**cable alternative configuration in brackets**

This document and its contents is owned by LU-VE Group or its affiliates and protected by laws governing intellectual property and thereto related rights. Without limiting any rights related to this document, no part of this document may be copied, reproduced or transmitted in any form or by any means (electronic, mechanical, photocopying, recording, or otherwise), or for any purpose, without the expressed permission of LU-VE Group. Nor may it be used in any other way or for any other purpose than expressly permitted by LU-VE Group. LU-VE Group will enforce its rights related to this document to the fullest extent of the law, including the seeking of criminal prosecution.

| Status | change | date | name | | |
|---|---|---|---|---|---|
| 03 | New brand | 18/12/2019 | PCIA | date | 18/12/2019 |
| 02 | Changed labels and added layout | 03/07/2017 | PCIA | User | ITALPCIA |
| 01 | EBM electronic interface | 27/05/2016 | DRI | Proved | D.R. |

ALFA LU-VE

CONTROL PANEL POWER SUPPLY

Document number: 9460153460-03

Sheet 12
Sh. 17

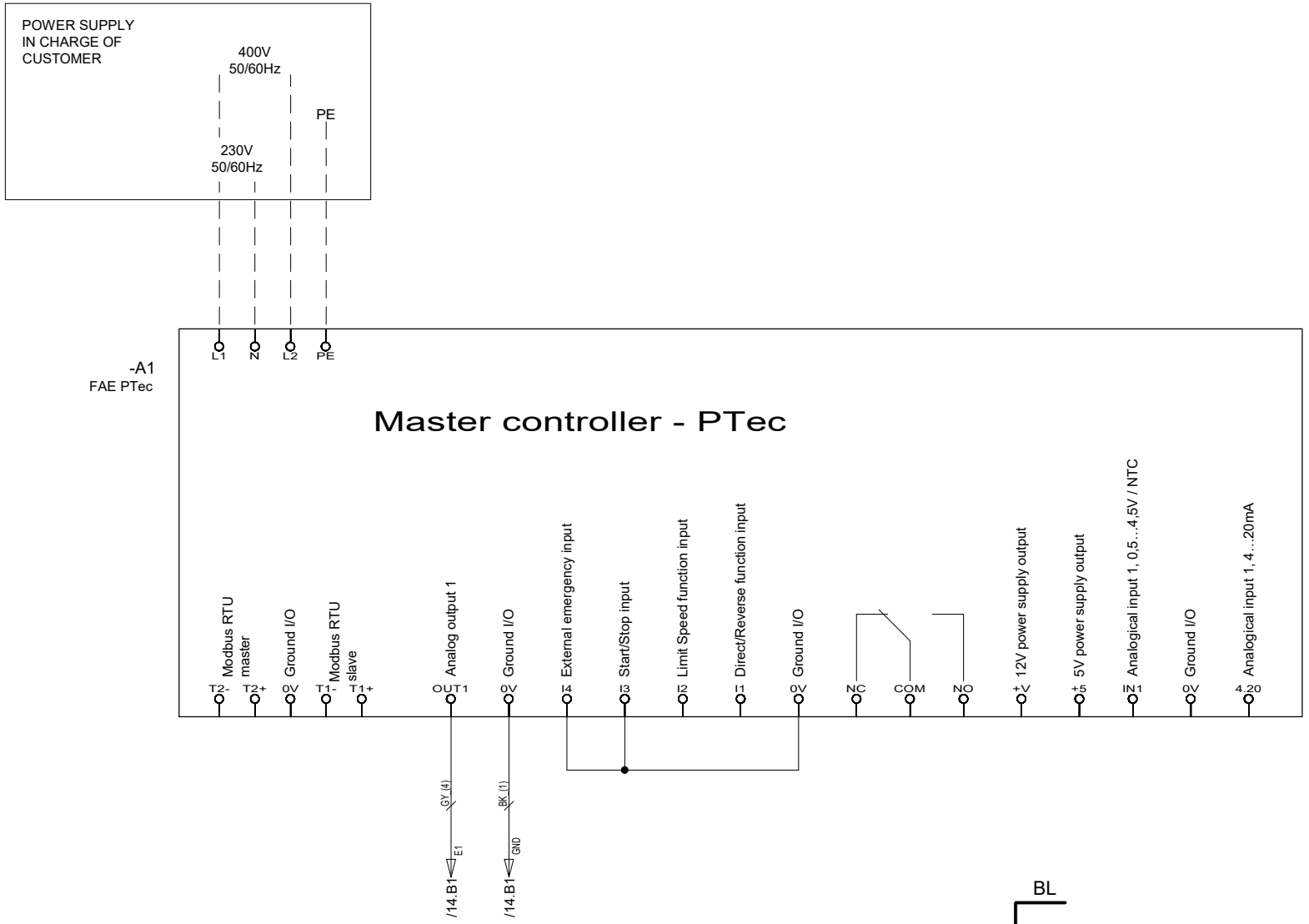


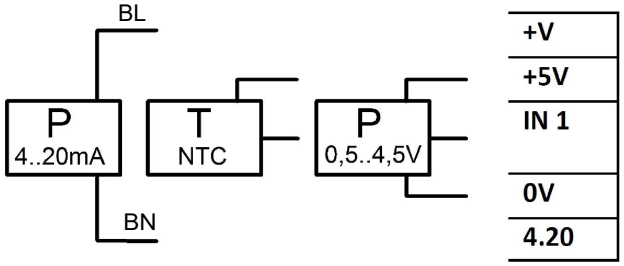


This document and its contents is owned by LU-VE Group or its affiliates and protected by laws governing intellectual property and thereto related rights. Without limiting any rights related to this document, no part of this document may be copied, reproduced or transmitted in any form or by any means (electronic, mechanical, photocopying, recording, or otherwise), or for any purpose, without the expressed permission of LU-VE Group. Nor may it be used in any other way or for any other purpose than expressly permited by LU-VE Group. LU-VE Group will enforce its rights related to this document to the fullest extent of the law, including the seeking of criminal prosecution.

| | | | | | |
|---|---|---|---|---|---|
| 03 | New brand | 18/12/2019 | PCIA | date | 18/12/2019 |
| 02 | Changed labels and added layout | 03/07/2017 | PCIA | User | ITALPCIA |
| 01 | EBM electronic interface | 27/05/2016 | DRI | Proved | |
| Status | change | date | name | | |

ALFA LU-VE

SIGNAL CONNECTION
PTec

Document number: 9460153460-03

Sheet 13
Sh. 17

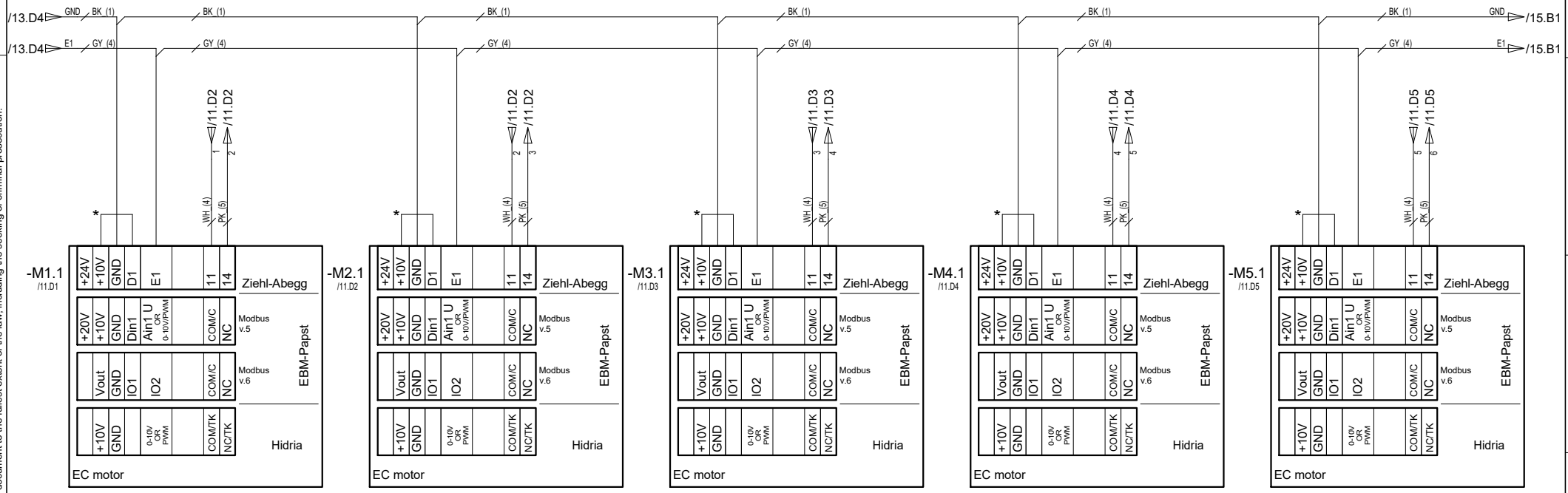


**NOTE: motors number according the order**
**cable alternative configuration in brackets**
*** connection needed only for Ziehl-Abegg fans**

This document and its contents is owned by LU-VE Group or its affiliates and protected by laws governing intellectual property and thereto related rights. Without limiting any rights related to this document, no part of this document may be copied, reproduced or transmitted in any form or by any means (electronic, mechanical, photocopying, recording, or otherwise), or for any purpose, without the expressed permission of LU-VE Group. Nor may it be used in any other way or for any other purpose than expressly permitted by LU-VE Group. LU-VE Group will enforce its rights related to this document to the fullest extent of the law, including the seeking of criminal prosecution.

| | | | | | |
|---|---|---|---|---|---|
| 03 | New brand | 18/12/2019 | PCIA | date | 18/12/2019 |
| 02 | Changed labels and added layout | 03/07/2017 | PCIA | User | ITALPCIA |
| 01 | EBM electronic interface | 27/05/2016 | DRI | Proved | D.R. |
| Status | change | date | name | | |

ALFA LU-VE

SIGNAL CONNECTION
MOTORS 1÷5

Document number: 9460153460-03

Sheet 14
Sh. 17

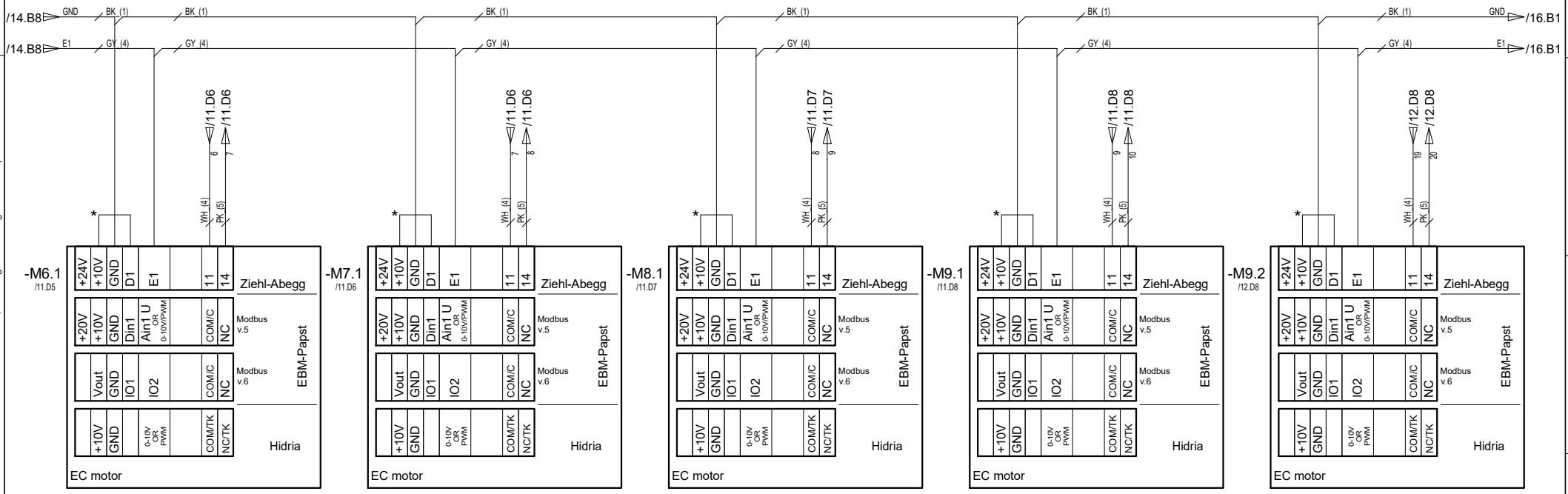


**NOTE: motors number according the order**
**cable alternative configuration in brackets**
*** connection needed only for Ziehl-Abegg fans**

This document and its contents is owned by LU-VE Group or its affiliates and protected by laws governing intellectual property and thereto related rights. Without limiting any rights related to this document, no part of this document may be copied, reproduced or transmitted in any form or by any means (electronic, mechanical, photocopying, recording, or otherwise), or for any purpose, without the expressed permission of LU-VE Group. Nor may it be used in any other way or for any other purpose than expressly permitted by LU-VE Group. LU-VE Group will enforce its rights related to this document to the fullest extent of the law, including the seeking of criminal prosecution.

| | | | | | |
|---|---|---|---|---|---|
| 03 | New brand | 18/12/2019 | PCIA | date | 18/12/2019 |
| 02 | Changed labels and added layout | 03/07/2017 | PCIA | User | ITALPCIA |
| 01 | EBM electronic interface | 27/05/2016 | DRI | Proved | D.R. |
| Status | change | date | name | | |

ALFA LU-VE

SIGNAL CONNECTION
MOTORS 6÷10

Document number: 9460153460-03

Sheet 15
Sh. 17

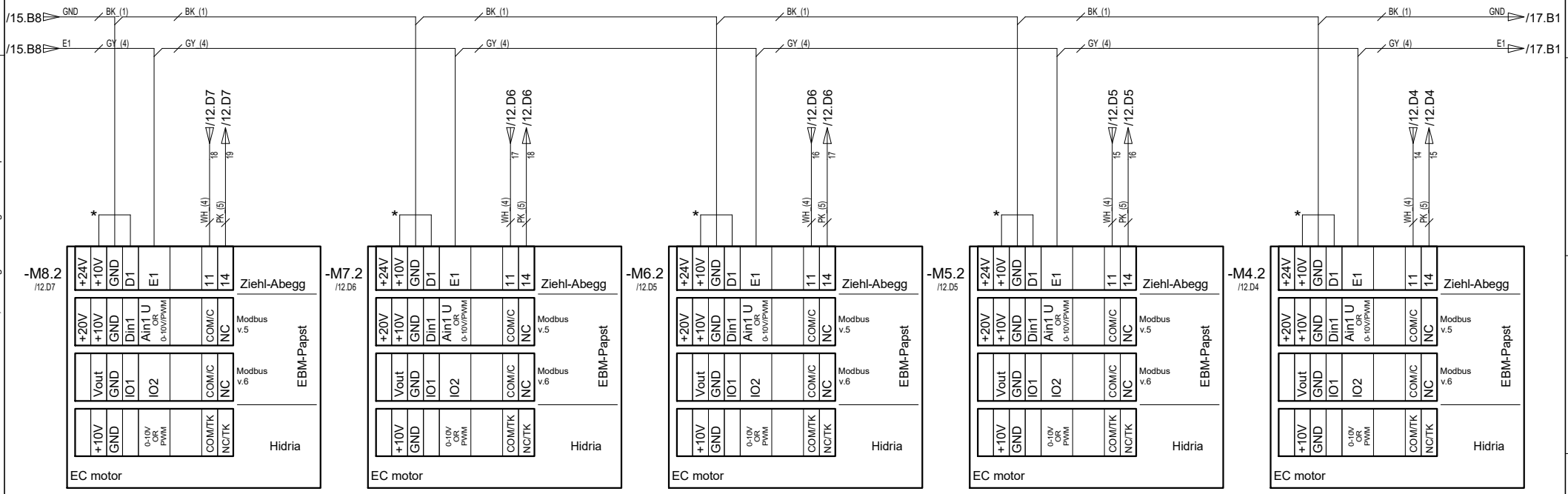


**NOTE: motors number according the order**
**cable alternative configuration in brackets**
*** connection needed only for Ziehl-Abegg fans**

This document and its contents is owned by LU-VE Group or its affiliates and protected by laws governing intellectual property and thereto related rights. Without limiting any rights related to this document, no part of this document may be copied, reproduced or transmitted in any form or by any means (electronic, mechanical, photocopying, recording, or otherwise), or for any purpose, without the expressed permission of LU-VE Group. Nor may it be used in any other way or for any other purpose than expressly permitted by LU-VE Group. LU-VE Group will enforce its rights related to this document to the fullest extent of the law, including the seeking of criminal prosecution.

| | | | | | |
|---|---|---|---|---|---|
| 03 | New brand | 18/12/2019 | PCIA | date | 18/12/2019 |
| 02 | Changed labels and added layout | 03/07/2017 | PCIA | User | ITALPCIA |
| 01 | EBM electronic interface | 27/05/2016 | DRI | Proved | D.R. |
| Status | change | date | name | | |

ALFA LU-VE

SIGNAL CONNECTION
MOTORS 11÷15

Document number: 9460153460-03

Sheet 16
Sh. 17

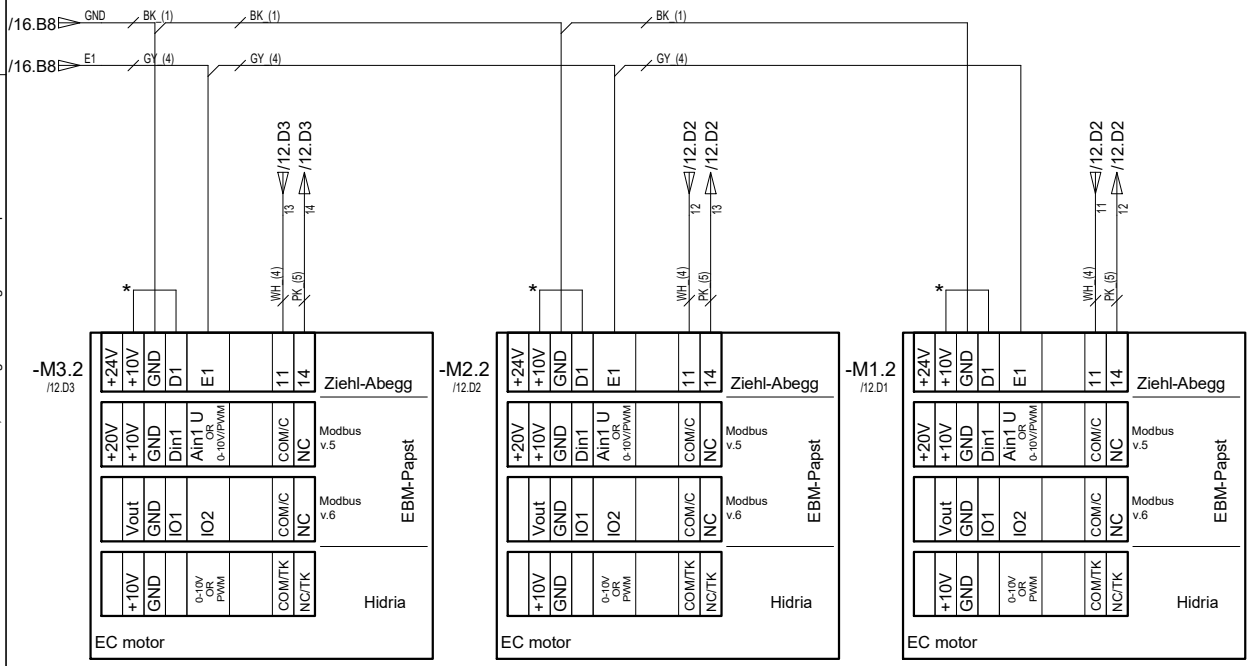


**NOTE: motors number according the order**
**cable alternative configuration in brackets**
*** connection needed only for Ziehl-Abegg fans**

This document and its contents is owned by LU-VE Group or its affiliates and protected by laws governing intellectual property and thereto related rights. Without limiting any rights related to this document, no part of this document may be copied, reproduced or transmitted in any form or by any means (electronic, mechanical, photocopying, recording, or otherwise), or for any purpose, without the expressed permission of LU-VE Group. Nor may it be used in any other way or for any other purpose than expressly permitted by LU-VE Group. LU-VE Group will enforce its rights related to this document to the fullest extent of the law, including the seeking of criminal prosecution.

| Status | change | date | name | | |
|---|---|---|---|---|---|
| 03 | New brand | 18/12/2019 | PCIA | date | 18/12/2019 |
| 02 | Changed labels and added layout | 03/07/2017 | PCIA | User | ITALPCIA |
| 01 | EBM electronic interface | 27/05/2016 | DRI | Proved | D.R. |

ALFA LU-VE

SIGNAL CONNECTION
MOTORS 16÷18

Document number: 9460153460-03

Sheet 17
Sh. 17