CB power + CB signal for external 0-10V Connection for 1÷18 EC motors

drawing number: 9460178564

This document and its contents is owned by LU-VE Group or its affiliates and protected by laws governing intellectual property and thereto related rights. Without limiting any rights related to this document, no part of this document may be copied, reproduced or transmitted in any form or by any means (electronic, mechanical, photocopying, recording, or otherwise), or for any purpose, without the expressed permission of LU-VE Group. Nor may it be used in any other way or for any other purpose than expressly permitted by LU-VE Group. LU-VE Group will enforce its rights related to this document to the fullest extent of the law, including the seeking of criminal prosecution.

alfa.luvegroup.com

BOARD RATED VALUE	
VOLTAGE DC	---
VOLTAGE AC	400 Vac ± 10%
FREQUENCY	50 - 60 Hz ± 2%
POWER MAX	
SHORT CIRCUIT CURRENT (Icc)	
IP DEGREE WITH CLOSED DOORS	IP54
IP DEGREE WITH OPENED DOORS	IP20

				date	18/12/2019
				User	ITALPCIA
01	New brand	18/12/2019	PCIA	Proved	D.R.
Status	change	date	name		

HEADING PAGE

Document number: 9460178564-01

Sheet 1

Sh. 16

INDEX

Sheet	Description
1	HEADING PAGE
2	INDEX AND REVISION
3	GRAPHICAL SYMBOL LIST
4	UNIT LAYOUT
5	SWITCH LAYOUT
6	CONNECTION BOX LAYOUT
7	CONNECTION BOX LAYOUT
8	CONNECTION BOX LAYOUT
9	CONNECTION BOX LAYOUT
10	SIGNAL BOX LAYOUT
11	CONTROL PANEL POWER SUPPLY
12	CONTROL PANEL POWER SUPPLY
13	SIGNAL CONNECTION
14	SIGNAL CONNECTION
15	SIGNAL CONNECTION
16	SIGNAL CONNECTION

REVISION

N°	Date	Description
0	22/02/2018	Emission
1	18/12/2019	New brand

This document and its contents is owned by LU-VE Group or its affiliates and protected by laws governing intellectual property and thereto related rights. Without limiting any rights related to this document, no part of this document may be copied, reproduced or transmitted in any form or by any means (electronic, mechanical, photocopying, recording, or otherwise), or for any purpose, without the expressed permission of LU-VE Group. Nor may it be used in any other way or for any other purpose than expressly permitted by LU-VE Group. LU-VE Group will enforce its rights related to this document to the fullest extent of the law, including the seeking of criminal prosecution.

				date	18/12/2019
				User	ITALPCIA
01	New brand	18/12/2019	PCIA	Proved	D.R.
Status	change	date	name		

ALFA LU-VE

INDEX AND REVISION

Document number: 9460178564-01

Sheet 2
Sh. 16

	ELECTRIC MOTOR		THERMAL PROTECTION CONTROL		RESISTOR		MANUALLY OPERATED SWITCH
	TERMINALS		CONVERTER		VARIABLE RESISTOR		MAINTENANCE SWITCH
	EARTHING		ELECTRONIC MOTOR		HEATER		OPEN CONTACT
	WIRES CONNECTION		CUT-PHASE SPEED CONTROLLER SINGLE PHASE		VOLTAGE TRANSFORMER		CLOSED CONTACT
	T-CONNECTION		CUT-PHASE SPEED CONTROLLER THREE PHASE		PLUG AND SOCKET		CHANGEOVER CONTACT
	SERIE CONNECTION		MASTER CONTROLLER EC REGULATOR		FEMALE CONTACT (OF A SOCKET OR PLUG)		MAKE CONTACT, DELAYED WHEN THE DEVICE CONTAINING THE CONTACT IS BEING ACTIVATED
	PARALLEL CONNECTION		SAFETY OR EMERGENCY CONTROL WITH MUSHROOM PUSH-BUTTON		MALE CONTACT (OF A SOCKET OR PLUG)		BREAK CONTACT, DELAYED WHEN THE DEVICE CONTAINING THE CONTACT IS BEING DE-ACTIVATED
	ROTATIVE CONTROL		KEY CONTROL		PUSH-BUTTON CONTROL		PUSH-BUTTON CONTROL

This document and its contents is owned by LU-VE Group or its affiliates and protected by laws governing intellectual property and thereto related rights. Without limiting any rights related to this document, no part of this document may be copied, reproduced or transmitted in any form or by any means (electronic, mechanical, photocopying, recording, or otherwise), or for any purpose, without the expressed permission of LU-VE Group. Nor may it be used in any other way or for any other purpose than expressly permitted by LU-VE Group. LU-VE Group will enforce its rights related to this document to the fullest extent of the law, including the seeking of criminal prosecution.

				date	18/12/2019
				User	ITALPCIA
01	New brand	18/12/2019	PCIA	Proved	D.R.
Status	change	date	name		

ALFA LU-VE

GRAPHICAL SYMBOL LIST

Document number: 9460178564-01

Sheet 3
Sh. 16

UNIT LAYOUT

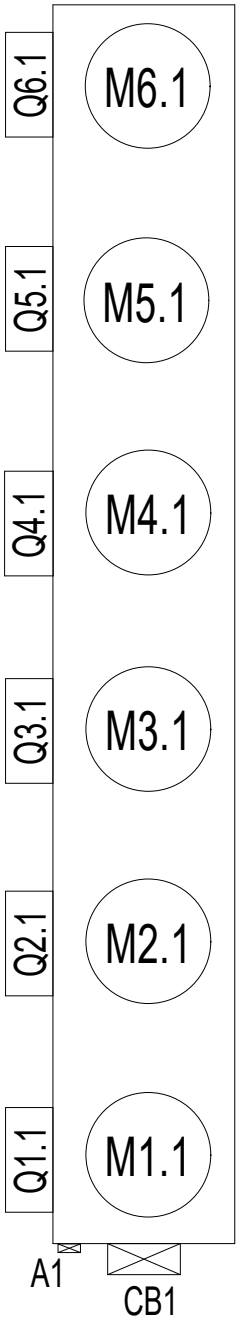

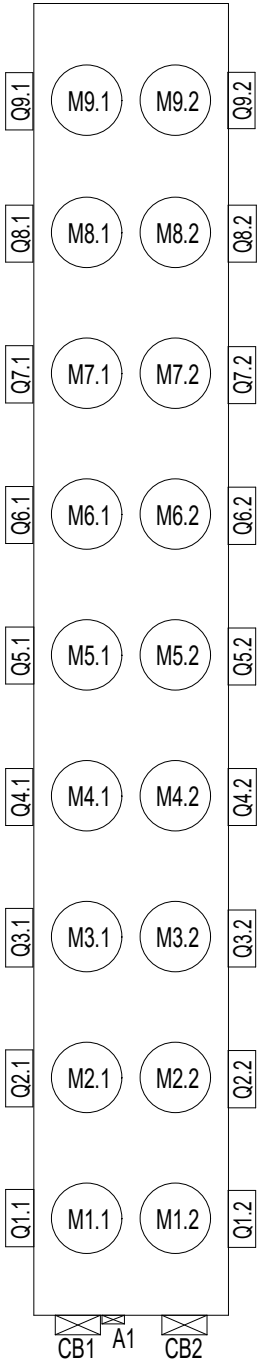

NOTE: The drawing does not indicate the correct position of components

This document and its contents is owned by LU-VE Group or its affiliates and protected by laws governing intellectual property and thereto related rights. Without limiting any rights related to this document, no part of this document may be copied, reproduced or transmitted in any form or by any means (electronic, mechanical, photocopying, recording, or otherwise), or for any purpose, without the expressed permission of LU-VE Group. Nor may it be used in any other way or for any other purpose than expressly permitted by LU-VE Group. LU-VE Group will enforce its rights related to this document to the fullest extent of the law, including the seeking of criminal prosecution.

				date	18/12/2019
				User	ITALPCIA
01	New brand	18/12/2019	PCIA	Proved	
Status	change	date	name		

ALFA LU-VE

UNIT LAYOUT

Document number: 9460178564-01

Sheet 4

Sh. 16

Q1.1 - Q9.1
Q1.2 - Q9.2

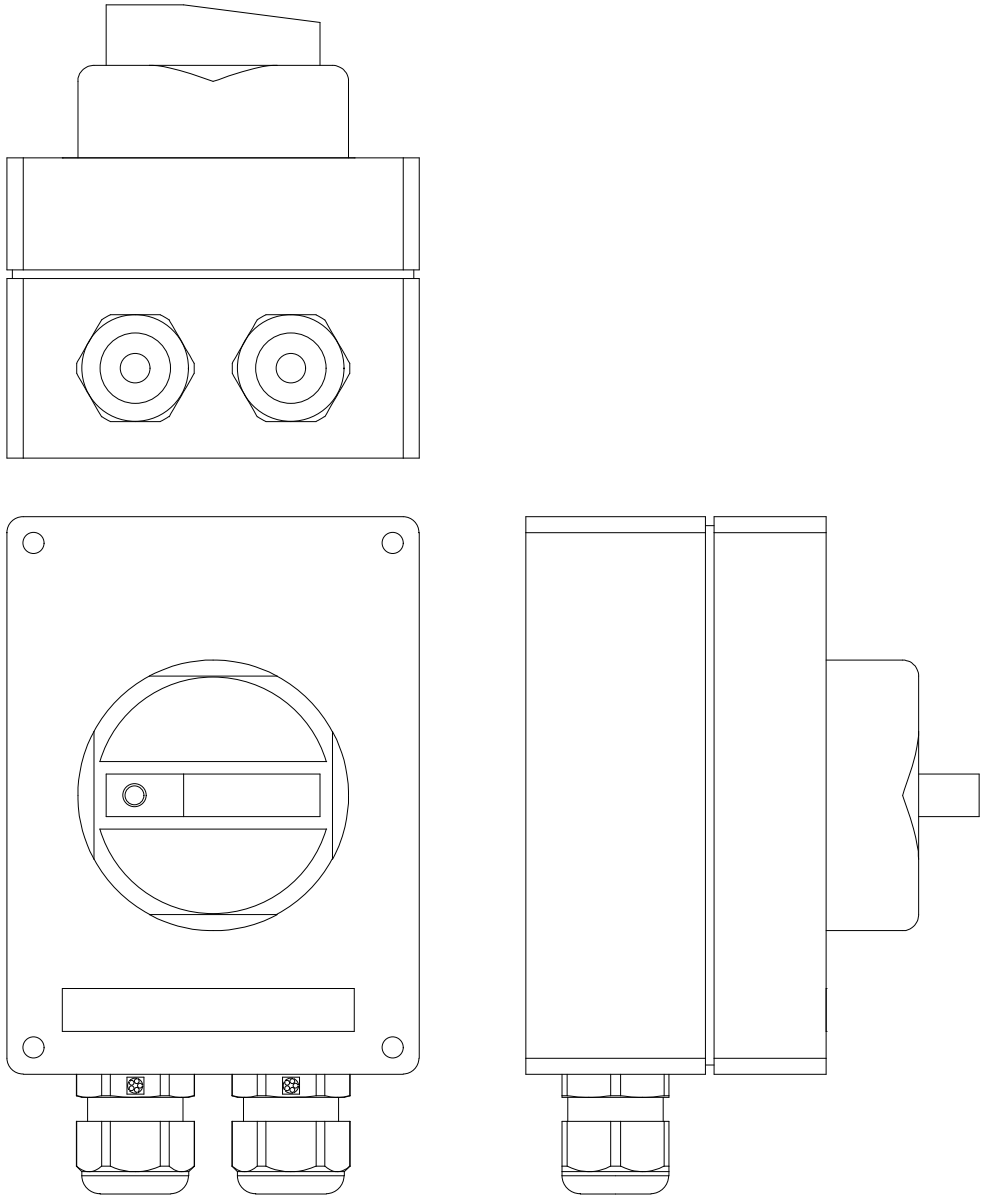

Technical data

Material: Polycarbonate
IP protection class: IP66
Color: Grey/black
Rated insulation voltage: 690V
Rated operational current: 16A
Ambient temperature: -40/+80°C

This document and its contents is owned by LU-VE Group or its affiliates and protected by laws governing intellectual property and thereto related rights. Without limiting any rights related to this document, no part of this document may be copied, reproduced or transmitted in any form or by any means (electronic, mechanical, photocopying, recording, or otherwise), or for any purpose, without the expressed permission of LU-VE Group. Nor may it be used in any other way or for any other purpose than expressly permitted by LU-VE Group. LU-VE Group will enforce its rights related to this document to the fullest extent of the law, including the seeking of criminal prosecution.

				date	18/12/2019
				User	ITALPCIA
01	New brand	18/12/2019	PCIA	Proved	PCIA
Status	change	date	name		

ALFA LU-VE

SWITCH LAYOUT

Document number: 9460178564-01

Sheet 5
Sh. 16

CB1 - CB2

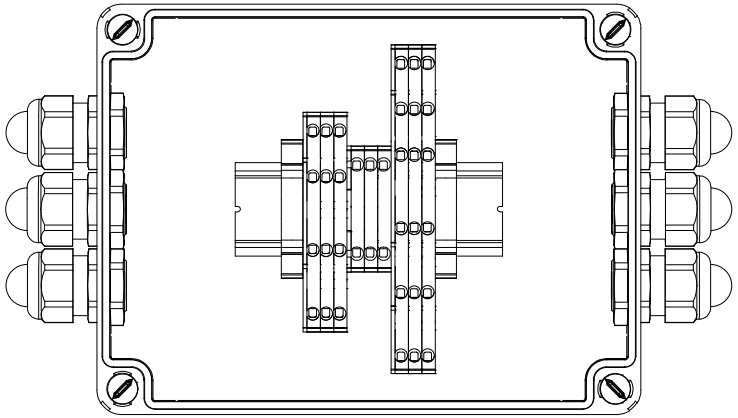

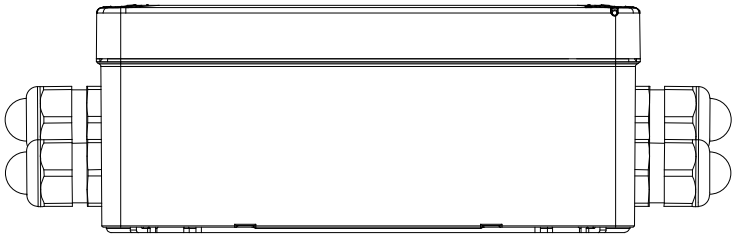

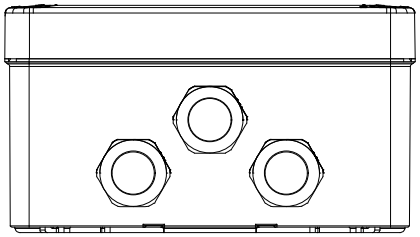

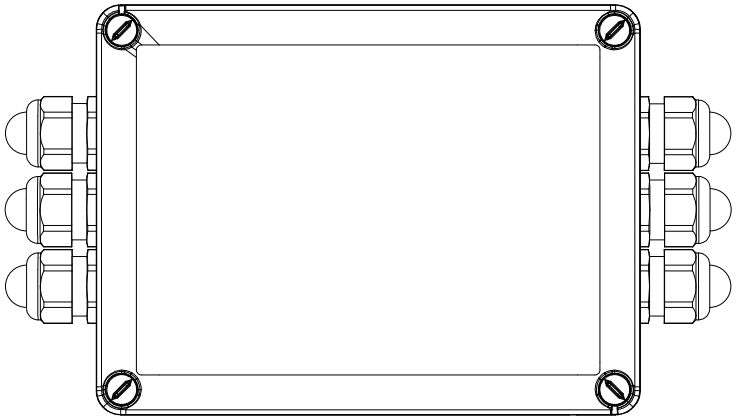

Technical data

Material: Polycarbonate
IP protection class: IP56
Color: RAL7035
Rated insulation voltage: 750V
Ambient temperature: -25/+60°C
Dimensions: 190x140x70 mm

This document and its contents is owned by LU-VE Group or its affiliates and protected by laws governing intellectual property and thereto related rights. Without limiting any rights related to this document, no part of this document may be copied, reproduced or transmitted in any form or by any means (electronic, mechanical, photocopying, recording, or otherwise), or for any purpose, without the expressed permission of LU-VE Group. Nor may it be used in any other way or for any other purpose than expressly permitted by LU-VE Group. LU-VE Group will enforce its rights related to this document to the fullest extent of the law, including the seeking of criminal prosecution.

				date	18/12/2019
				User	ITALPCIA
01	New brand	18/12/2019	PCIA	Proved	PCIA
Status	change	date	name		

ALFA LU-VE

CONNECTION BOX LAYOUT
3 FANS - 3 PHASE

Document number: 9460178564-01

Sheet 6
Sh. 16

CB1 - CB2

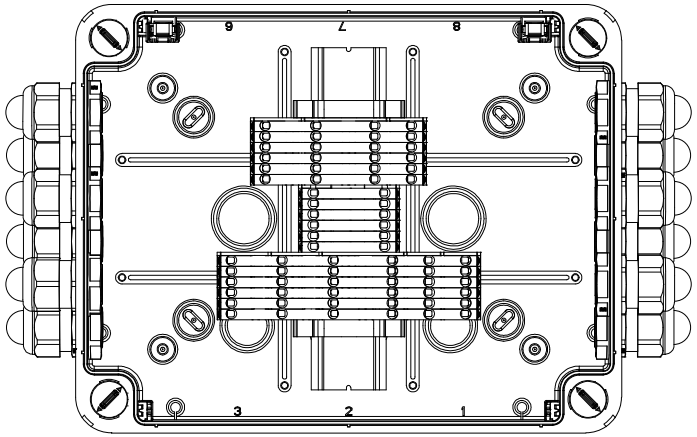

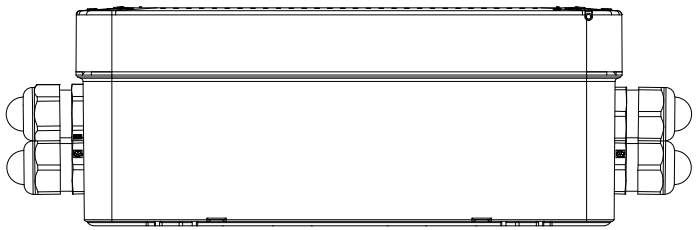

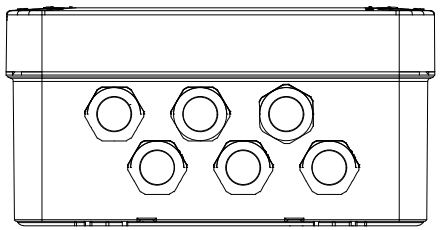

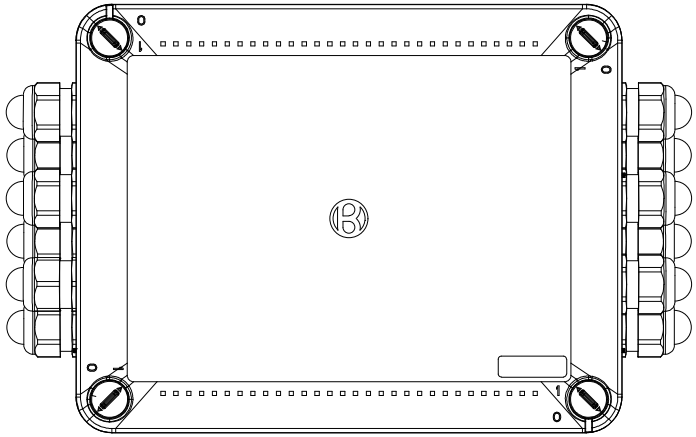

Technical data

Material: Polycarbonate
IP protection class: IP56
Color: RAL7035
Rated insulation voltage: 750V
Ambient temperature: -25/+60°C
Dimensions: 240x190x90 mm

This document and its contents is owned by LU-VE Group or its affiliates and protected by laws governing intellectual property and thereto related rights. Without limiting any rights related to this document, no part of this document may be copied, reproduced or transmitted in any form or by any means (electronic, mechanical, photocopying, recording, or otherwise), or for any purpose, without the expressed permission of LU-VE Group. Nor may it be used in any other way or for any other purpose than expressly permitted by LU-VE Group. LU-VE Group will enforce its rights related to this document to the fullest extent of the law, including the seeking of criminal prosecution.

				date	18/12/2019
				User	ITALPCIA
01	New brand	18/12/2019	PCIA	Proved	PCIA
Status	change	date	name		

ALFA LU-VE

CONNECTION BOX LAYOUT
7 FANS - 3 PHASE

Document number: 9460178564-01

Sheet 7
Sh. 16

CB1 - CB2

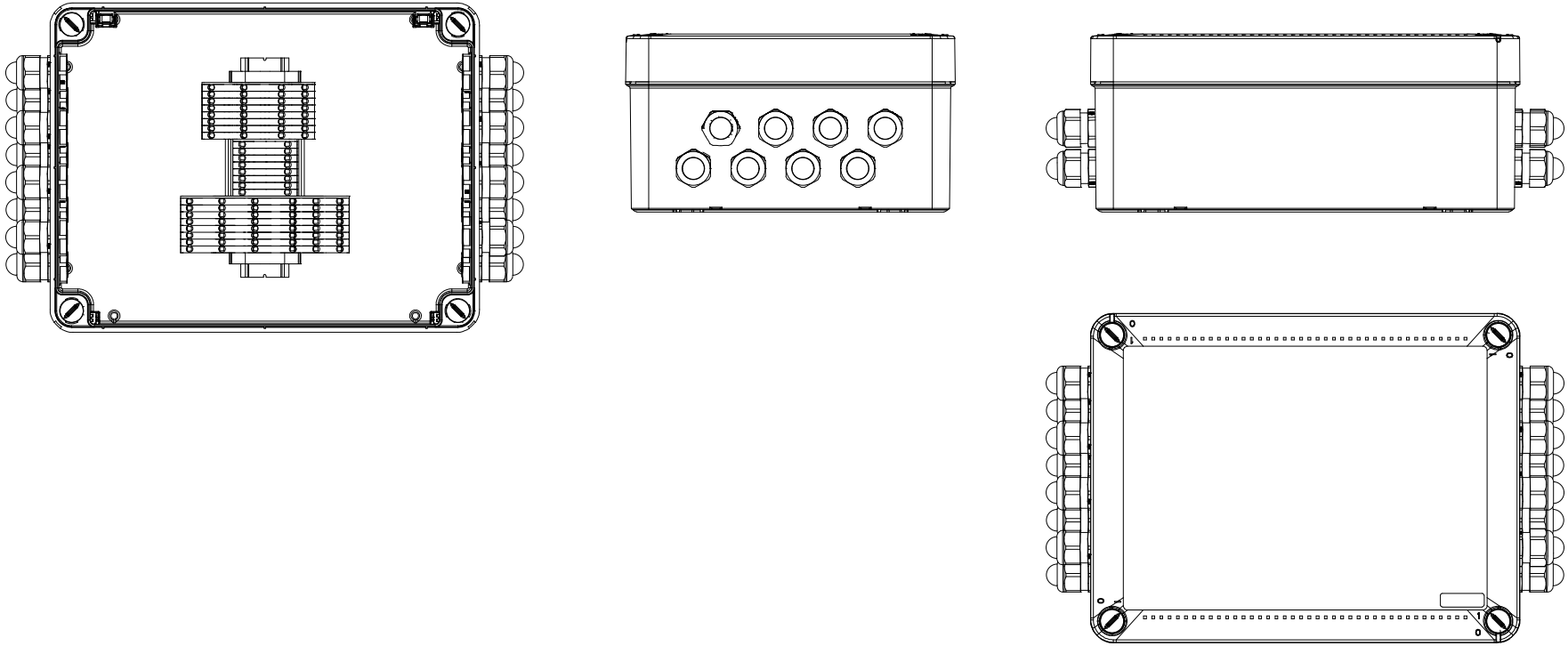

Technical data

Material: Polycarbonate
IP protection class: IP56
Color: RAL7035
Rated insulation voltage: 750V
Ambient temperature: -25/+60°C
Dimensions: 300x220x120 mm

This document and its contents is owned by LU-VE Group or its affiliates and protected by laws governing intellectual property and thereto related rights. Without limiting any rights related to this document, no part of this document may be copied, reproduced or transmitted in any form or by any means (electronic, mechanical, photocopying, recording, or otherwise), or for any purpose, without the expressed permission of LU-VE Group. Nor may it be used in any other way or for any other purpose than expressly permitted by LU-VE Group. LU-VE Group will enforce its rights related to this document to the fullest extent of the law, including the seeking of criminal prosecution.

				date	18/12/2019
				User	ITALPCIA
01	New brand	18/12/2019	PCIA	Proved	PCIA
Status	change	date	name		

ALFA LU-VE

CONNECTION BOX LAYOUT
8 FANS - 3 PHASE

Document number: 9460178564-01

Sheet 8
Sh. 16

CB1 - CB2

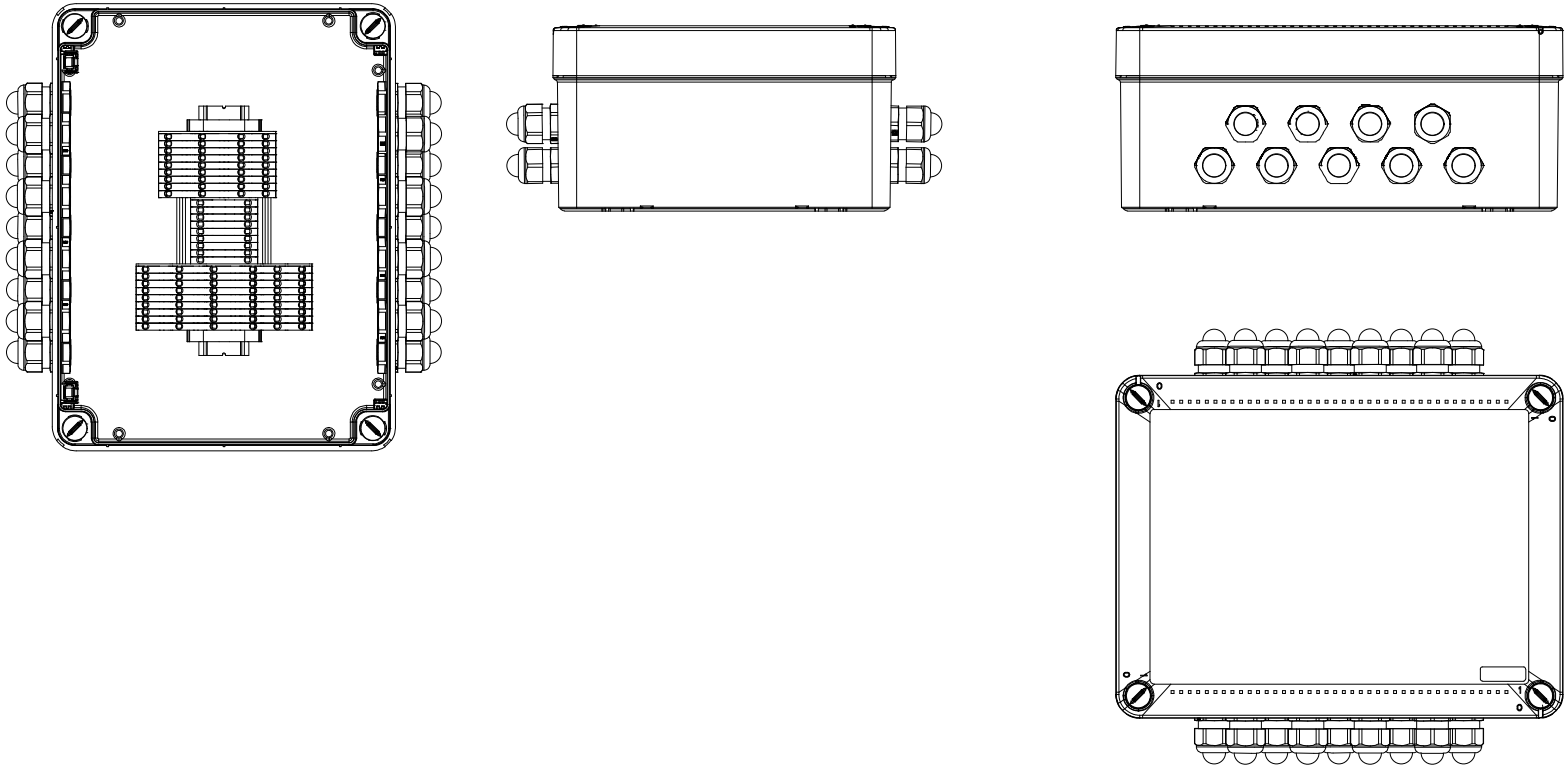

Technical data

Material: Polycarbonate
IP protection class: IP56
Color: RAL7035
Rated insulation voltage: 750V
Ambient temperature: -25/+60°C
Dimensions: 300x220x120 mm

This document and its contents is owned by LU-VE Group or its affiliates and protected by laws governing intellectual property and thereto related rights. Without limiting any rights related to this document, no part of this document may be copied, reproduced or transmitted in any form or by any means (electronic, mechanical, photocopying, recording, or otherwise), or for any purpose, without the expressed permission of LU-VE Group. Nor may it be used in any other way or for any other purpose than expressly permitted by LU-VE Group. LU-VE Group will enforce its rights related to this document to the fullest extent of the law, including the seeking of criminal prosecution.

				date	18/12/2019
				User	ITALPCIA
01	New brand	18/12/2019	PCIA	Proved	PCIA
Status	change	date	name		

ALFA LU-VE

CONNECTION BOX LAYOUT
9 FANS - 1 PHASE

Document number: 9460178564-01

Sheet 9
Sh. 16

SB

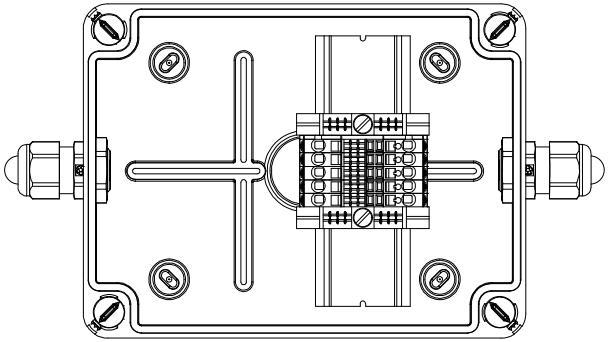

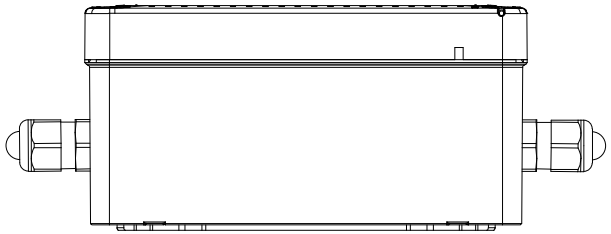

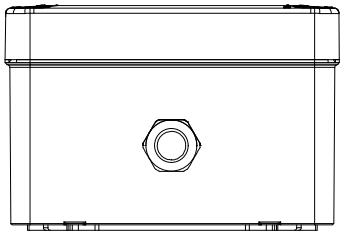

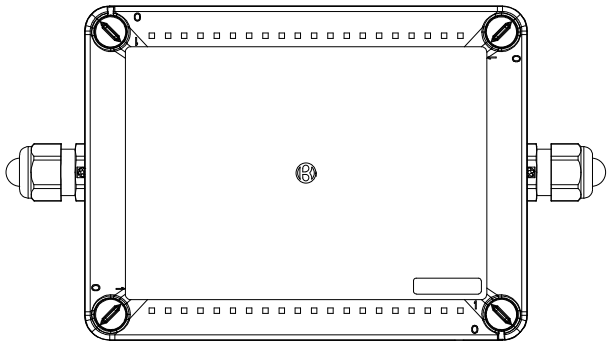

Technical data

Material: Polycarbonate
IP protection class: IP56
Color: RAL7035
Rated insulation voltage: 750V
Ambient temperature: -25/+60°C
Dimensions: 150x110x70 mm

This document and its contents is owned by LU-VE Group or its affiliates and protected by laws governing intellectual property and thereto related rights. Without limiting any rights related to this document, no part of this document may be copied, reproduced or transmitted in any form or by any means (electronic, mechanical, photocopying, recording, or otherwise), or for any purpose, without the expressed permission of LU-VE Group. Nor may it be used in any other way or for any other purpose than expressly permitted by LU-VE Group. LU-VE Group will enforce its rights related to this document to the fullest extent of the law, including the seeking of criminal prosecution.

				date	18/12/2019
				User	ITALPCIA
01	New brand	18/12/2019	PCIA	Proved	PCIA
Status	change	date	name		

ALFA LU-VE

SIGNAL BOX LAYOUT

Document number: 9460178564-01

Sheet 10
Sh. 16

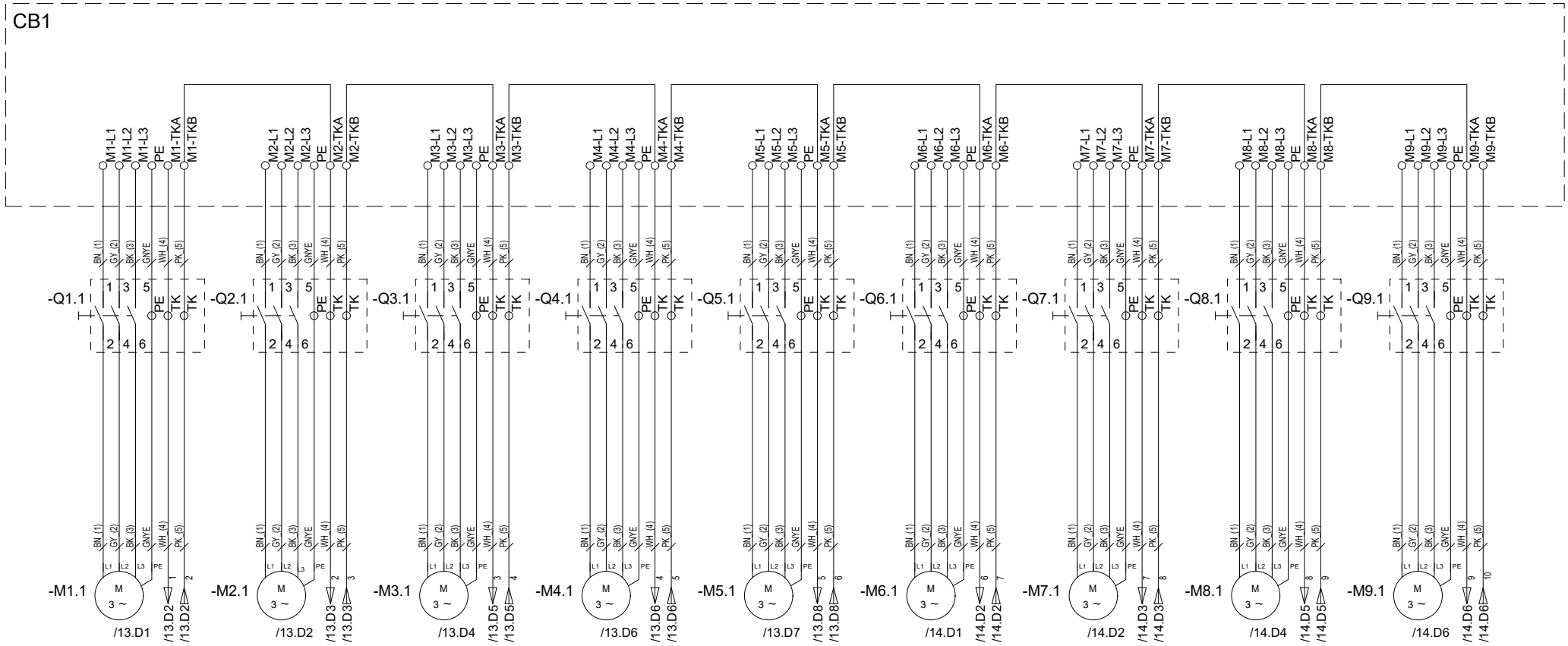

NOTE: switch for maintenance before motors are optional
motors number according the order
cable alternative configuration in brackets

This document and its contents is owned by LU-VE Group or its affiliates and protected by laws governing intellectual property and thereto related rights. Without limiting any rights related to this document, no part of this document may be copied, reproduced or transmitted in any form or by any means (electronic, mechanical, photocopying, recording, or otherwise), or for any purpose, without the expressed permission of LU-VE Group. Nor may it be used in any other way or for any other purpose than expressly permitted by LU-VE Group. LU-VE Group will enforce its rights related to this document to the fullest extent of the law, including the seeking of criminal prosecution.

				date	18/12/2019
				User	ITALPCIA
01	New brand	18/12/2019	PCIA	Proved	D.R.
Status	change	date	name		

ALFA LU-VE

CONTROL PANEL POWER SUPPLY

Document number: 9460178564-01

Sheet 11
Sh. 16

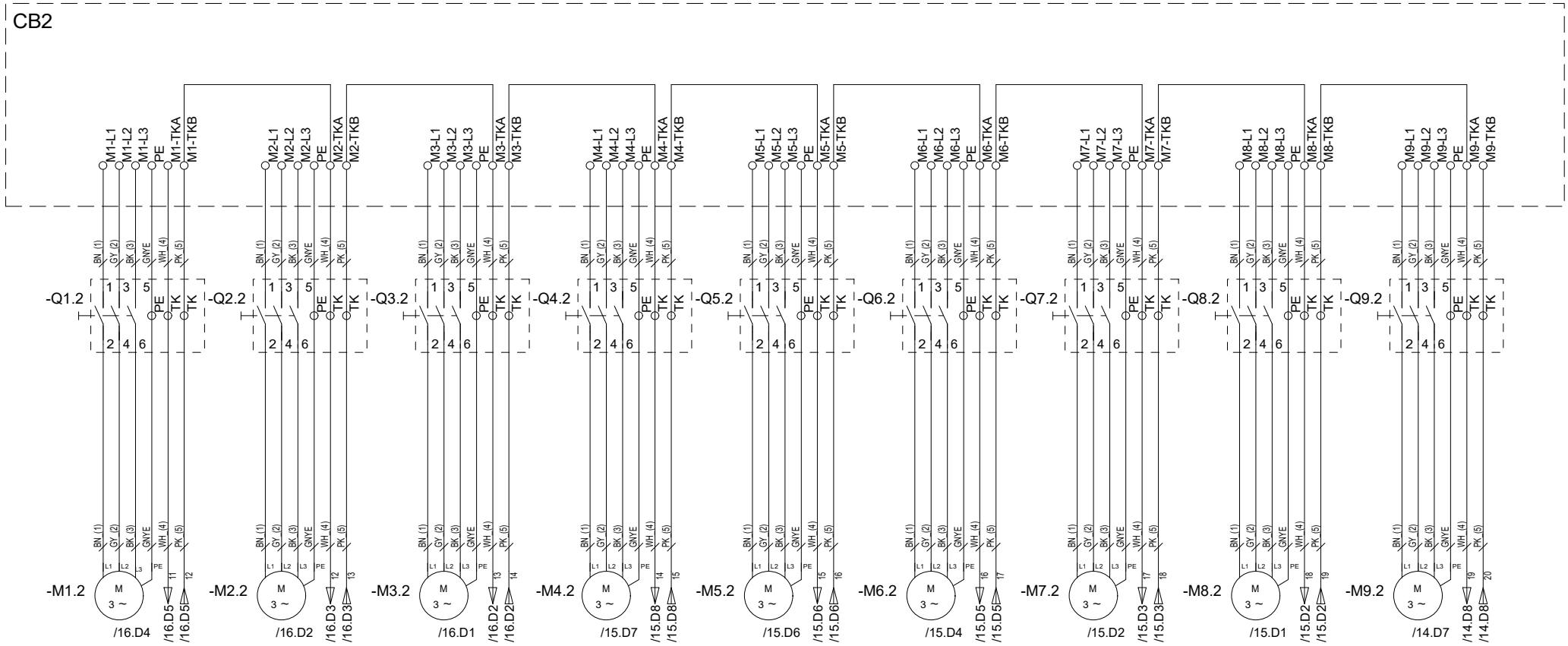

NOTE: switch for maintenance before motors are optional
motors number according the order
cable alternative configuration in brackets

This document and its contents is owned by LU-VE Group or its affiliates and protected by laws governing intellectual property and thereto related rights. Without limiting any rights related to this document, no part of this document may be copied, reproduced or transmitted in any form or by any means (electronic, mechanical, photocopying, recording, or otherwise), or for any purpose, without the expressed permission of LU-VE Group. Nor may it be used in any other way or for any other purpose than expressly permitted by LU-VE Group. LU-VE Group will enforce its rights related to this document to the fullest extent of the law, including the seeking of criminal prosecution.

				date	18/12/2019
				User	ITALPCIA
01	New brand	18/12/2019	PCIA	Proved	D.R.
Status	change	date	name		

ALFA LU-VE

CONTROL PANEL POWER SUPPLY

Document number: 9460178564-01

Sheet 12
Sh. 16

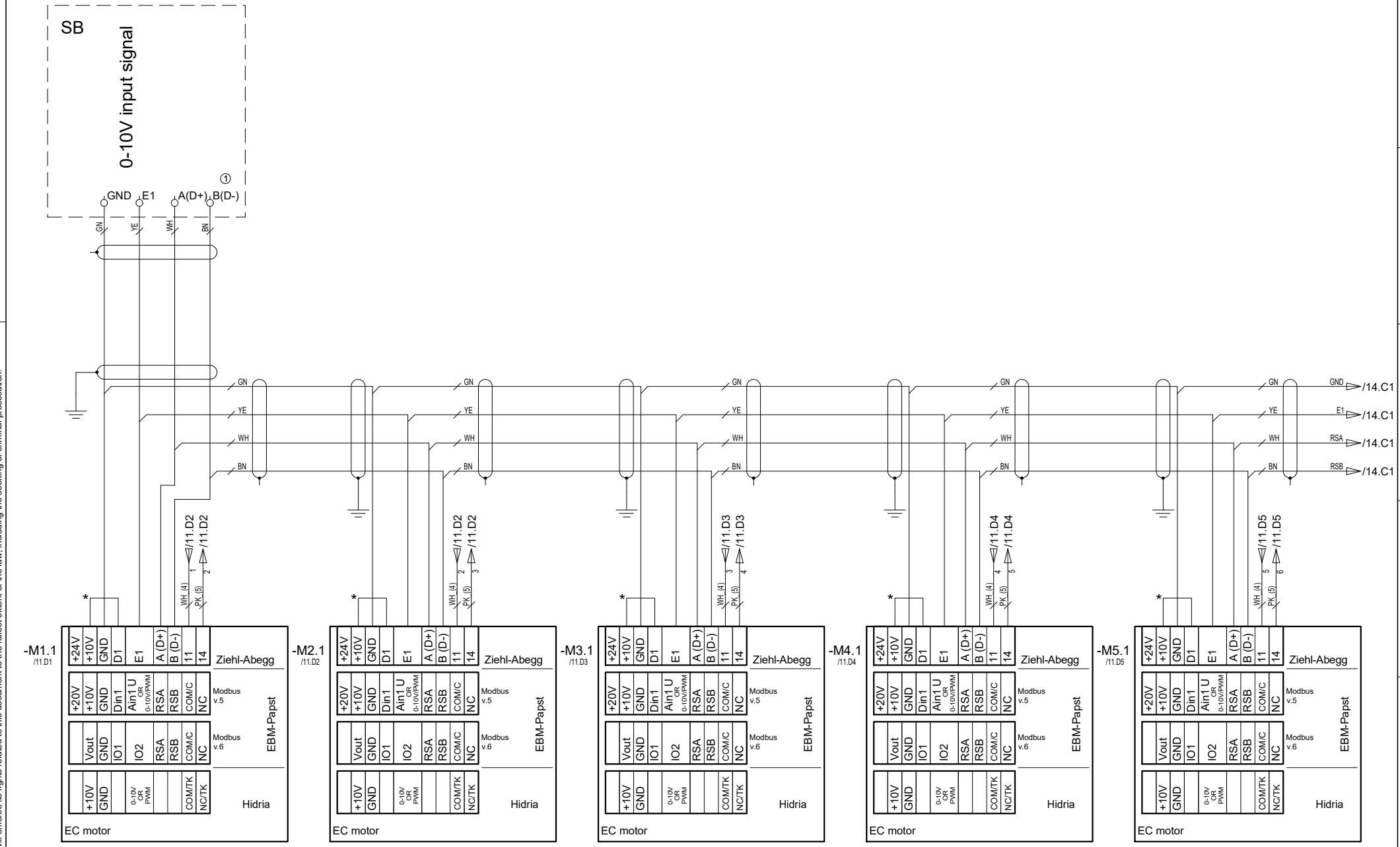

NOTE: motors number according the order
cable alternative configuration in brackets
*** connection needed only for Ziehl-Abegg fans**
① Modbus connection optional only for Ziehl-Abegg fans

This document and its contents is owned by LU-VE Group or its affiliates and protected by laws governing intellectual property and thereto related rights. Without limiting any rights related to this document, no part of this document may be copied, reproduced or transmitted in any form or by any means (electronic, mechanical, photocopying, recording, or otherwise), or for any purpose, without the expressed permission of LU-VE Group. Nor may it be used in any other way or for any other purpose than expressly permitted by LU-VE Group. LU-VE Group will enforce its rights related to this document to the fullest extent of the law, including the seeking of criminal prosecution.

				date	18/12/2019
				User	ITALPCIA
01	New brand	18/12/2019	PCIA	Proved	D.R.
Status	change	date	name		

ALFA LU-VE

SIGNAL CONNECTION
MOTORS 1÷5

Document number: 9460178564-01

Sheet 13
Sh. 16

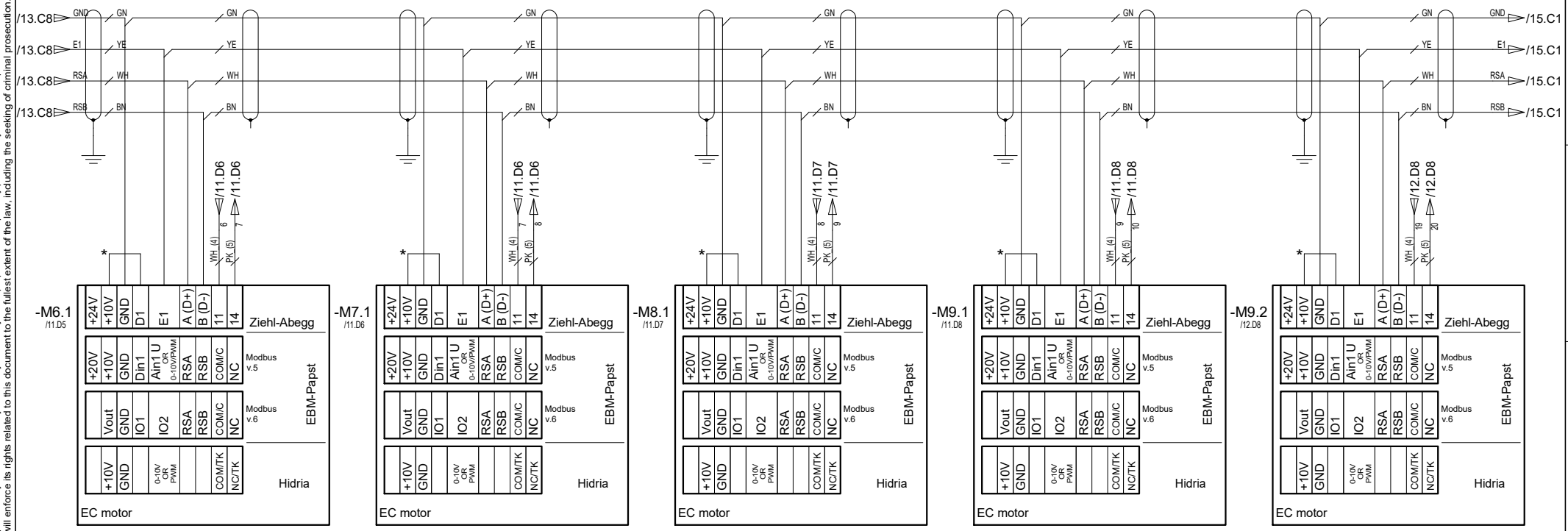

NOTE: motors number according the order
cable alternative configuration in brackets
*** connection needed only for Ziehl-Abegg fans**
(1) Modbus connection optional only for Ziehl-Abegg fans

This document and its contents is owned by LU-VE Group or its affiliates and protected by laws governing intellectual property and thereto related rights. Without limiting any rights related to this document, no part of this document may be copied, reproduced or transmitted in any form or by any means (electronic, mechanical, photocopying, recording, or otherwise), or for any purpose, without the expressed permission of LU-VE Group. Nor may it be used in any other way or for any other purpose than expressly permitted by LU-VE Group. LU-VE Group will enforce its rights related to this document to the fullest extent of the law, including the seeking of criminal prosecution.

				date	18/12/2019
				User	ITALPCIA
01	New brand	18/12/2019	PCIA	Proved	D.R.
Status	change	date	name		

ALFA LU-VE

SIGNAL CONNECTION
MOTORS 6÷10

Document number: 9460178564-01

Sheet 14
Sh. 16

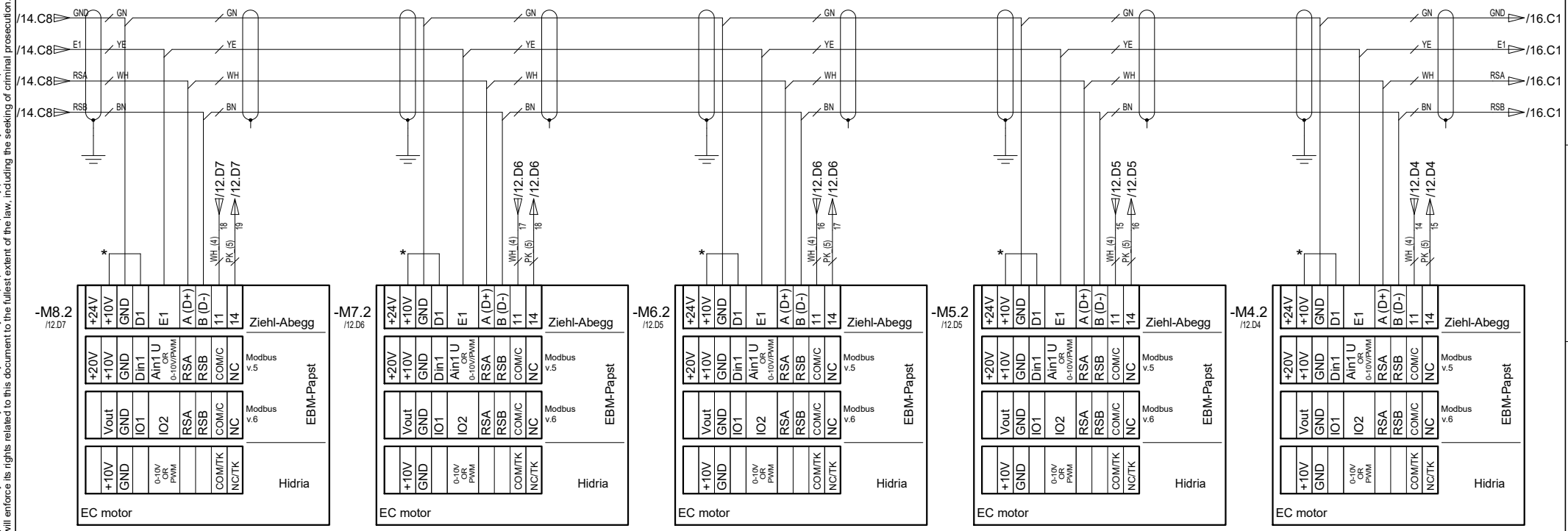

NOTE: motors number according the order
cable alternative configuration in brackets
*** connection needed only for Ziehl-Abegg fans**
(1) Modbus connection optional only for Ziehl-Abegg fans

This document and its contents is owned by LU-VE Group or its affiliates and protected by laws governing intellectual property and thereto related rights. Without limiting any rights related to this document, no part of this document may be copied, reproduced or transmitted in any form or by any means (electronic, mechanical, photocopying, recording, or otherwise), or for any purpose, without the expressed permission of LU-VE Group. Nor may it be used in any other way or for any other purpose than expressly permitted by LU-VE Group. LU-VE Group will enforce its rights related to this document to the fullest extent of the law, including the seeking of criminal prosecution.

				date	18/12/2019
				User	ITALPCIA
01	New brand	18/12/2019	PCIA	Proved	D.R.
Status	change	date	name		

ALFA LU-VE

SIGNAL CONNECTION
MOTORS 11÷15

Document number: 9460178564-01

Sheet 15
Sh. 16

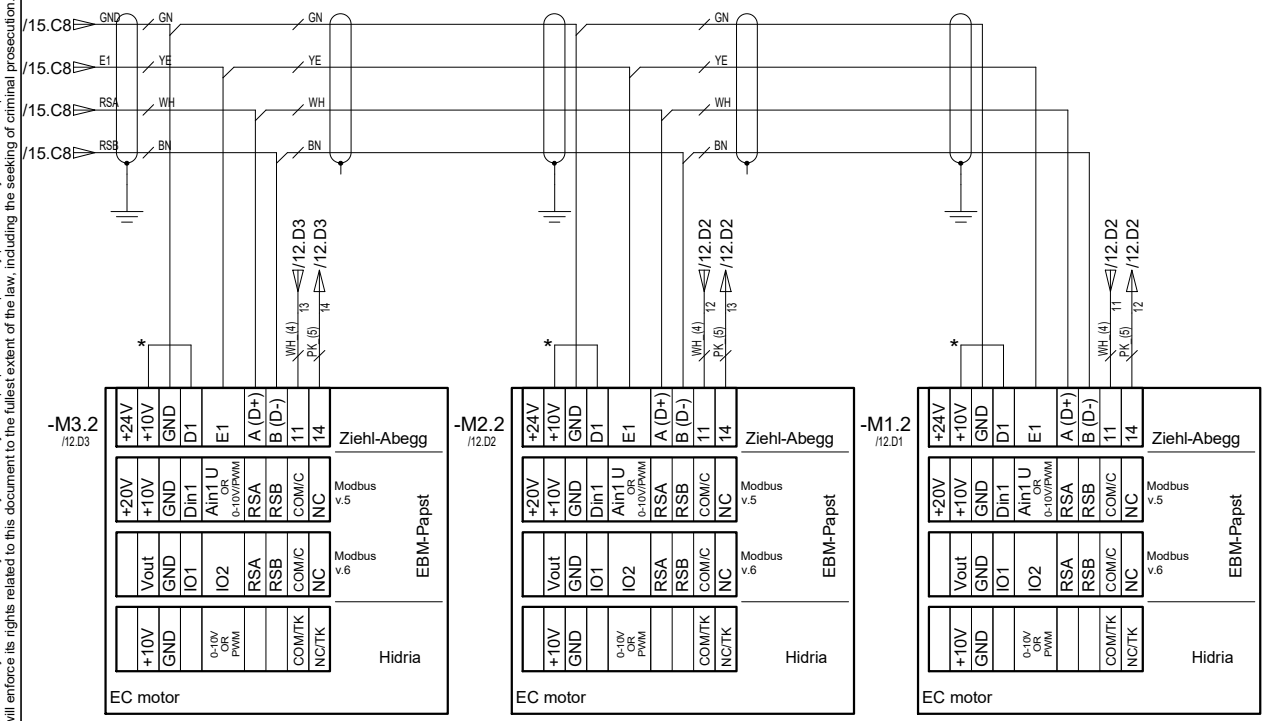

NOTE: motors number according the order
cable alternative configuration in brackets
*** connection needed only for Ziehl-Abegg fans**
(1) Modbus connection optional only for Ziehl-Abegg fans

This document and its contents is owned by LU-VE Group or its affiliates and protected by laws governing intellectual property and thereto related rights. Without limiting any rights related to this document, no part of this document may be copied, reproduced or transmitted in any form or by any means (electronic, mechanical, photocopying, recording, or otherwise), or for any purpose, without the expressed permission of LU-VE Group. Nor may it be used in any other way or for any other purpose than expressly permitted by LU-VE Group. LU-VE Group will enforce its rights related to this document to the fullest extent of the law, including the seeking of criminal prosecution.

				date	18/12/2019
				User	ITALPCIA
01	New brand	18/12/2019	PCIA	Proved	D.R.
Status	change	date	name		

ALFA LU-VE

SIGNAL CONNECTION
MOTORS 16÷18

Document number: 9460178564-01

Sheet 16
Sh. 16