alfa.luvegroup.com

Product code	CM00009385	Rev	6
Project description	EP 8 FANS ALFA-LUVE		

Supply voltage	3P+N+E - 400V - 50Hz	Operating temperature	40°C
Rated current	51A Icc 6KA		
Auxiliary voltage	24Vac/230Vac		

Designed by	Franco Meneghetti	on	02/02/2015
Checked by	Mattia Bortolotto	on	11/12/2015
Approved by	Luca Tessaro	on	11/12/2015

NOT ALLOWED DELIVER TO THIRD PARTIES OR REPRODUCE THIS DOCUMENT NOT USE THE CONTENT OR OTHERWISE MAKE KNOWN TO THIRD PARTIES WITHOUT OUR EXPRESS PERMISSION. ANY INFRINGEMENT WILL RESULT IN DAMAGES SUFFERED. And it MADE SUBJECT TO ALL RIGHTS UNDER PATENTS OR MODELS

Cables Range

Cross-sect	N07V-K Range (A)	N07G9 Range (A)
0,5	\	NOT AVAILABLE
0,75	\	NOT AVAILABLE
1	8A	12A
1,5	11A	16A
2,5	15A	22.4A
4	20A	29.6A
6	26A	38.4A
10	36A	52.8A
16	48A	70.4A
25	64A	93.6A
35	80A	115.2A
50	95A	140A
95	150A	177.6A
120	170A	215.2A
150	195A	NOT AVAILABLE
185	220A	NOT AVAILABLE
240	260A	NOT AVAILABLE
300	300A	NOT AVAILABLE

Colors Table

Colors	Short name
Red	RD
Black	BK
Yellow	YE
Yellow\Green	GNYE
Orange	OG
Light blue	TQ
Blue	BU
Pink	PK
White	WH
Gray	GY
Brown	BN
Green	GN
Purple	VT
\	
\	
\	
\	

REVIEW TABLE

Rev.	Technical name	Date	Note
01	Meneghetti F.	17/03/2015	- -
02	Meneghetti F.	01/07/2015	- -
03	Meneghetti F.	11/10/2015	- -
04	Meneghetti F.	09/02/2016	- -
05	Meneghetti F.	15/06/2016	- -
06	Quaggia L.	10/09/2019	- -

Table of contents

F06_003

Page	Page type	Page description	Date	Edited by
/1	Title page / cover sheet	Title page	31/01/2020	Luca Quaggia
/2	Pre-planning	Technical information	31/01/2020	Luca Quaggia
/3	Table of contents	Table of contents	31/01/2020	Luca Quaggia
/4	Model view	General view	31/01/2020	Luca Quaggia
/5	Model view	View of all sides	31/01/2020	Luca Quaggia
/6	Model view	Mounting plate view	31/01/2020	Luca Quaggia
/7	Model view	Door view	31/01/2020	Luca Quaggia
/8	Model view	Guides view	31/01/2020	Luca Quaggia
/9	Model view	Channels view	31/01/2020	Luca Quaggia
/10	Model view	Bottom view	31/01/2020	Luca Quaggia
+QE/1	Schematic multi-line	Power circuit	31/01/2020	Luca Quaggia
+QE/2	Schematic multi-line	Power circuit	31/01/2020	Luca Quaggia
+QE/3	Schematic multi-line	Power circuit	31/01/2020	Luca Quaggia
+QE/4	Schematic multi-line	Auxiliary circuit	31/01/2020	Luca Quaggia
+QE/5	Schematic multi-line	Auxiliary circuit	31/01/2020	Luca Quaggia
+QE/5.a	Schematic multi-line	Auxiliary circuit	31/01/2020	Luca Quaggia
+QE/6	Schematic multi-line	Auxiliary circuit	31/01/2020	Luca Quaggia
+QE/7	Schematic multi-line	Auxiliary circuit	31/01/2020	Luca Quaggia
+QE/8	Schematic multi-line	Auxiliary circuit	31/01/2020	Luca Quaggia
+QE/9	Schematic multi-line	Auxiliary circuit	31/01/2020	Luca Quaggia
+QE/10	Schematic multi-line	Auxiliary circuit	31/01/2020	Luca Quaggia
+QE/11	Schematic multi-line	Auxiliary circuit	31/01/2020	Luca Quaggia
+QE/12	Graphic	Serial connection	31/01/2020	Luca Quaggia
+QE/13	Graphic	Certificazione	31/01/2020	Luca Quaggia
=REP1/1,0	Cable diagram	Multicore cables scheme	31/01/2020	Luca Quaggia
=REP1/1,1	Cable diagram	Multicore cables scheme	31/01/2020	Luca Quaggia
=REP1/1,2	Cable diagram	Multicore cables scheme	31/01/2020	Luca Quaggia
=REP1/1,3	Cable diagram	Multicore cables scheme	31/01/2020	Luca Quaggia
=REP1/2,0	Terminal diagram	Terminal strip	31/01/2020	Luca Quaggia
=REP1/2,0.a	Terminal diagram	Terminal strip	31/01/2020	Luca Quaggia
=REP1/2,1	Terminal diagram	Terminal strip	31/01/2020	Luca Quaggia
=REP1/3,0	Parts list	BOM internal panel	31/01/2020	Luca Quaggia
=REP1/3,0.a	Parts list	BOM internal panel	31/01/2020	Luca Quaggia
=REP1/4,0	Parts list	BOM external panel	31/01/2020	Luca Quaggia

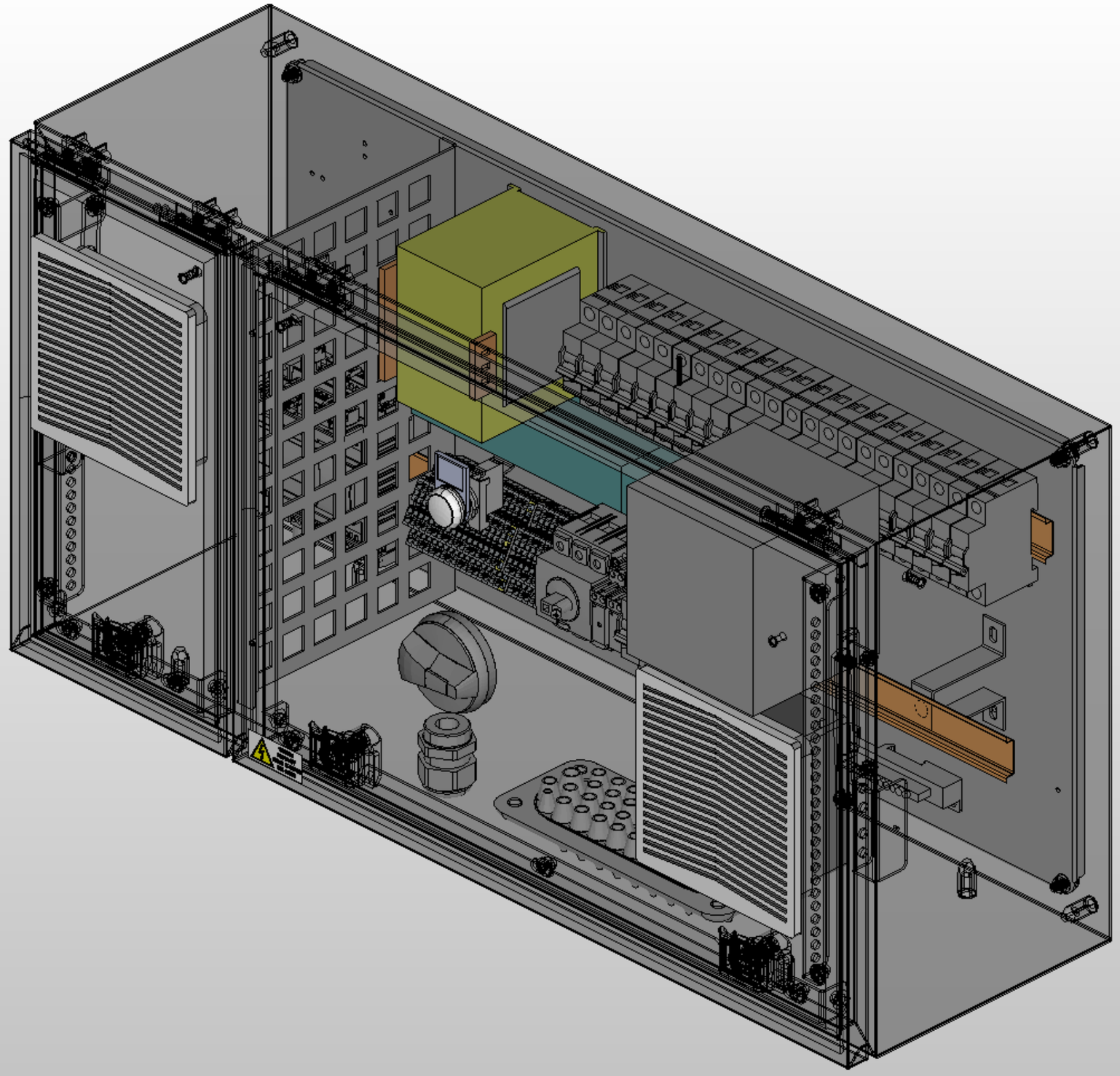

			Date	02/02/2015	CM00009385	ALFA LU-VE	General view	Mounting locations +	Page /4
			Elab.	Franco Meneghetti	EP 8 FANS ALFA-LUVE				Next 5
								Function =	Total pages 34
Modification	Date	Name							

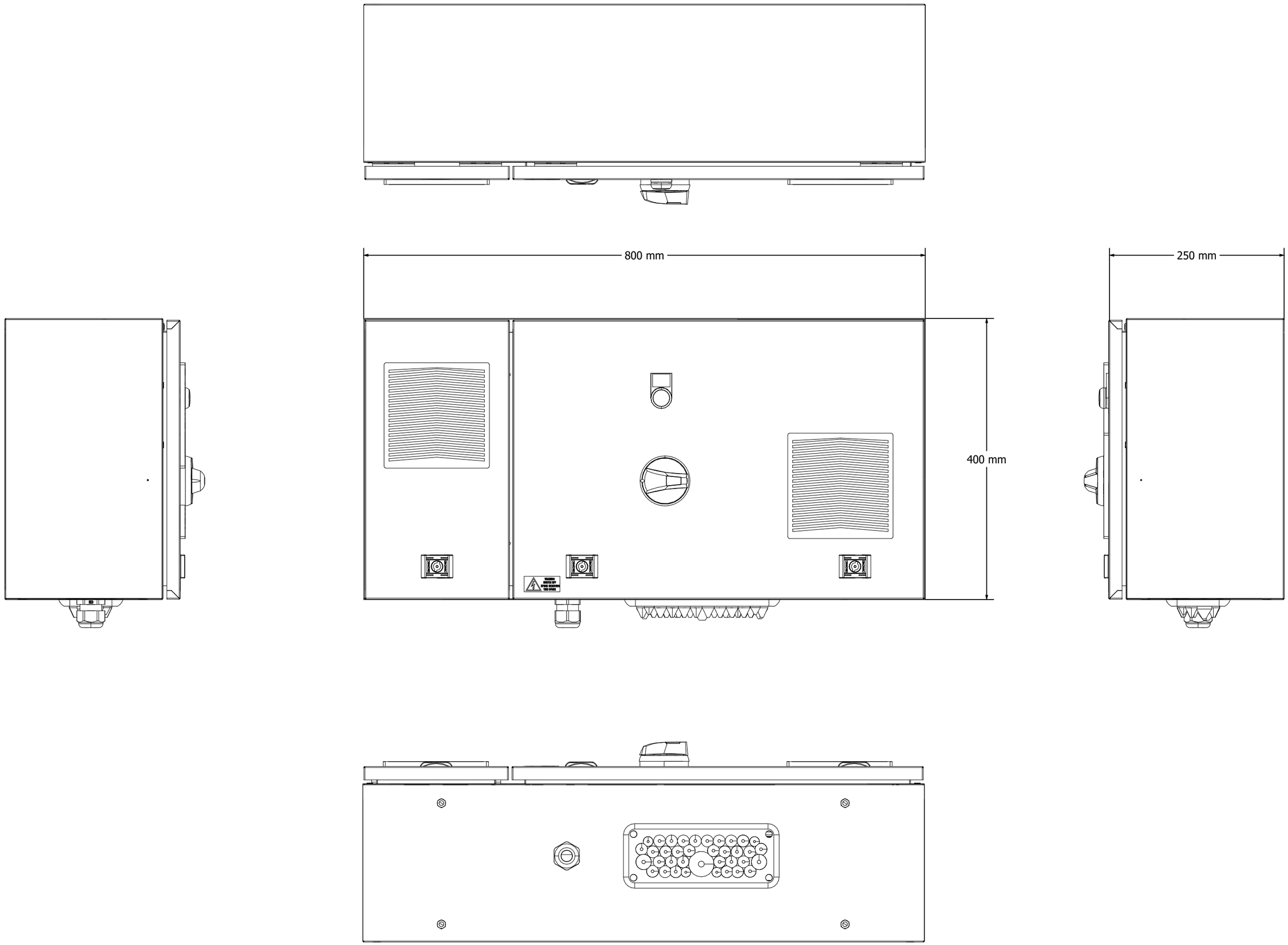

			Date	02/02/2015	CM00009385	ALFA LU-VE	View of all sides	Mounting locations +	Page /5
			Elab.	Franco Meneghetti	EP 8 FANS ALFA-LUVE				Next 6
Modification	Date	Name						Function =	Total pages 34

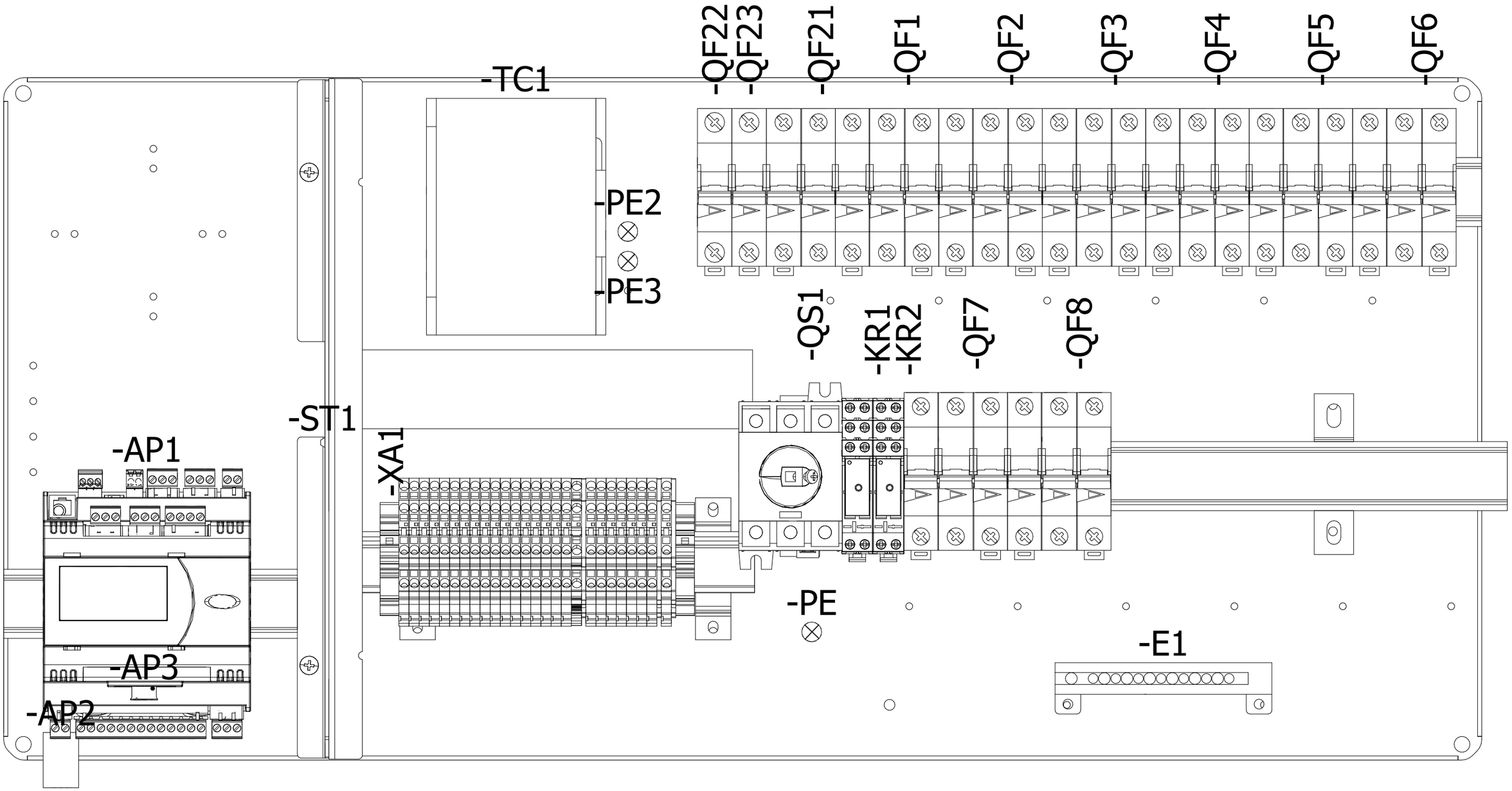

			Date	02/02/2015	CM00009385	ALFA LU-VE	Mounting plate view	Mounting locations +	Page /6
			Elab.	Franco Meneghetti	EP 8 FANS ALFA-LUVE				Next 7
								Function =	Total pages 34
Modification	Date	Name							

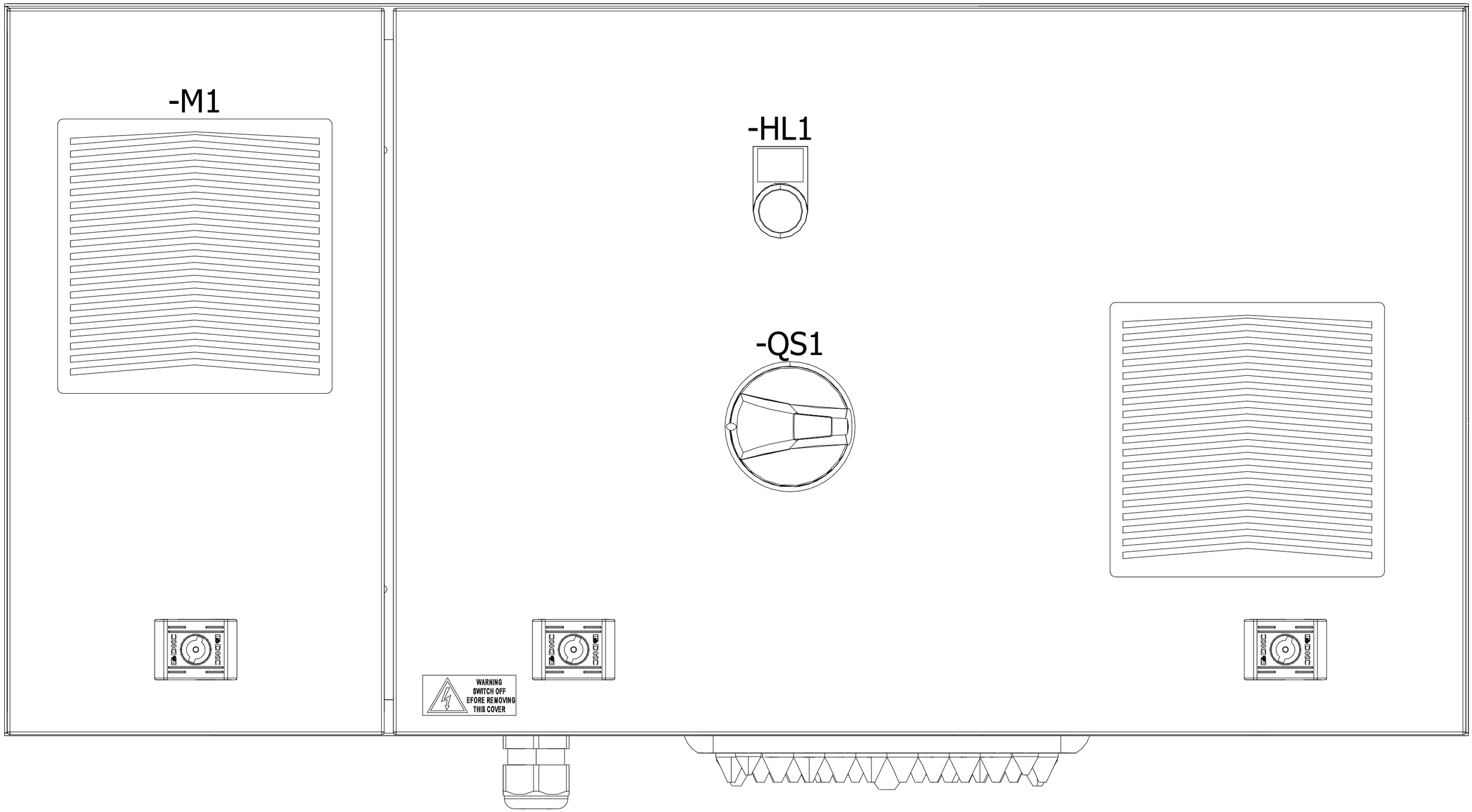

			Date	02/02/2015	CM00009385	ALFA LU-VE	Door view	Mounting locations +	Page /7
			Elab.	Franco Meneghetti	EP 8 FANS ALFA-LUVE				Next 8
								Function =	Total pages 34
Modification	Date	Name							

Layout guides and channels

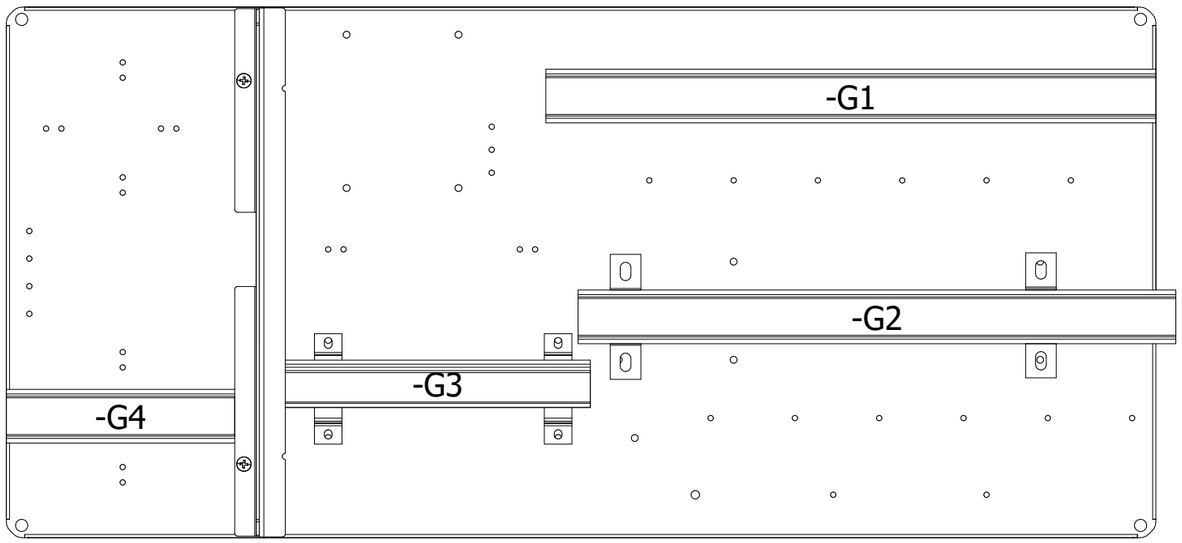

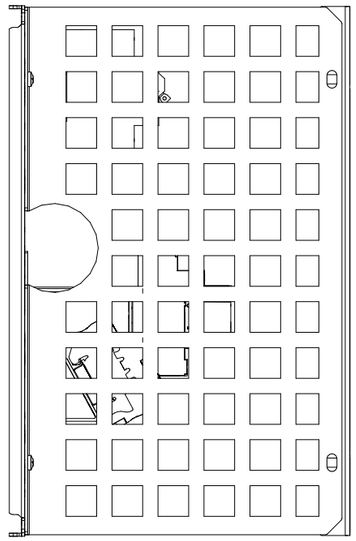

Sign	Type	Length (Tollerance -5mm)
U6	Inclined Bracket	
U7	Inclined Bracket	

G1	35x7.5	400 mm
G2	35x7.5	390 mm
G3	35x7.5	200 mm
G4	35x7.5	150 mm

U5	Support H=70mm	
U4	Support H=70mm	

U1	2cm Rise	
U2	2cm Rise	
U3	2cm Rise	

Empty

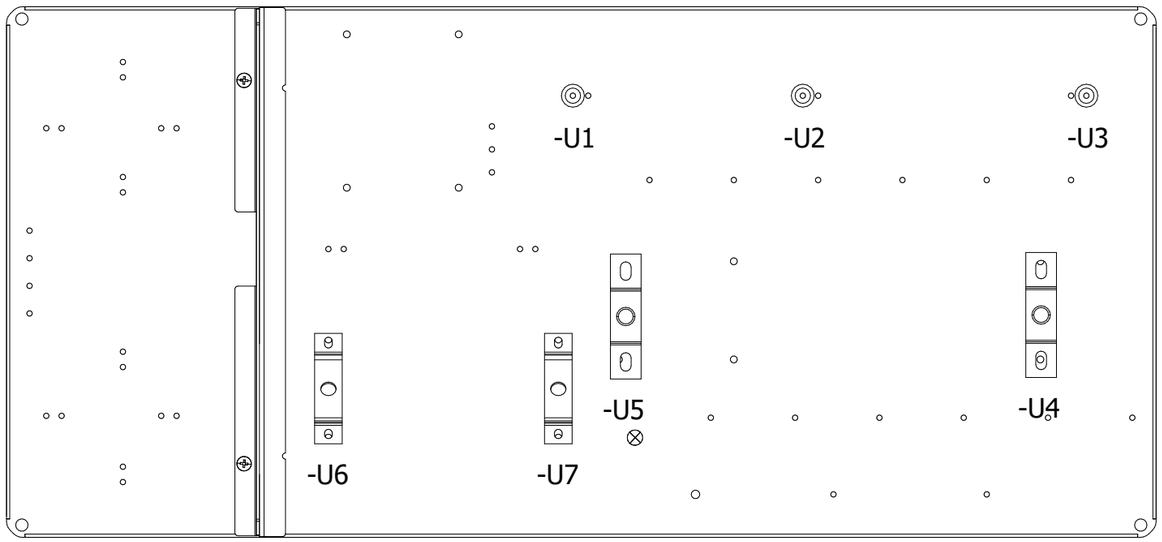

Empty

			Date	02/02/2015
			Elab.	Franco Meneghetti
Modification	Date	Name		

CM00009385

EP 8 FANS ALFA-LUVE

ALFA LU-VE

Guides view

Mounting locations +

Function =

Page /8

Next 9

Total pages 34

Layout guides and channels

Sign	Type	Length (Tollerance -5mm)
C1	40x60	205 mm

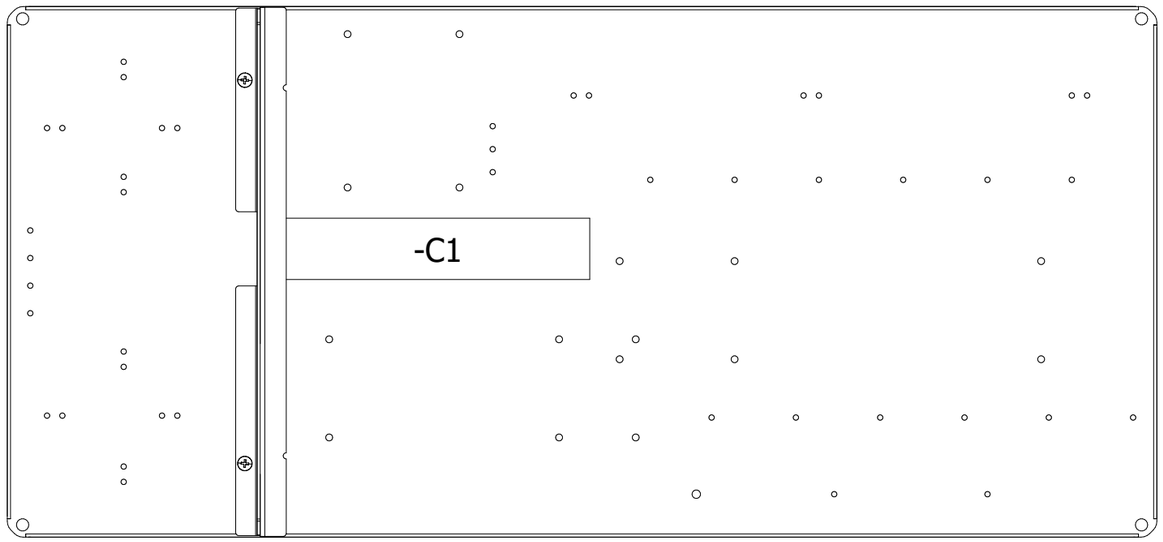

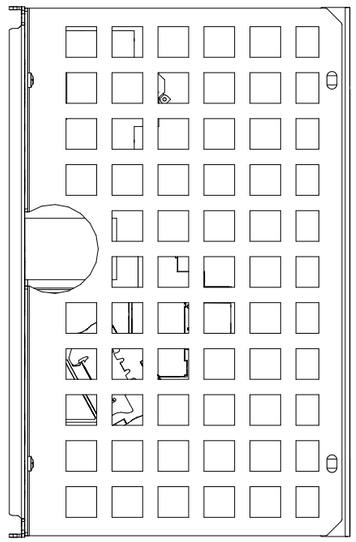

			Date	02/02/2015
			Elab.	Franco Meneghetti
Modification	Date	Name		

CM00009385

EP 8 FANS ALFA-LUVE

ALFA LU-VE

Channels view

Mounting locations +

Function =

Page /9

Next 10

Total pages 34

Cable entry/exit components

Item number	Component tipe	Drilling (Tollerance +-0.5mm)
1	M32 Gland	Ø 32.5mm
2	Multi-cable gland	

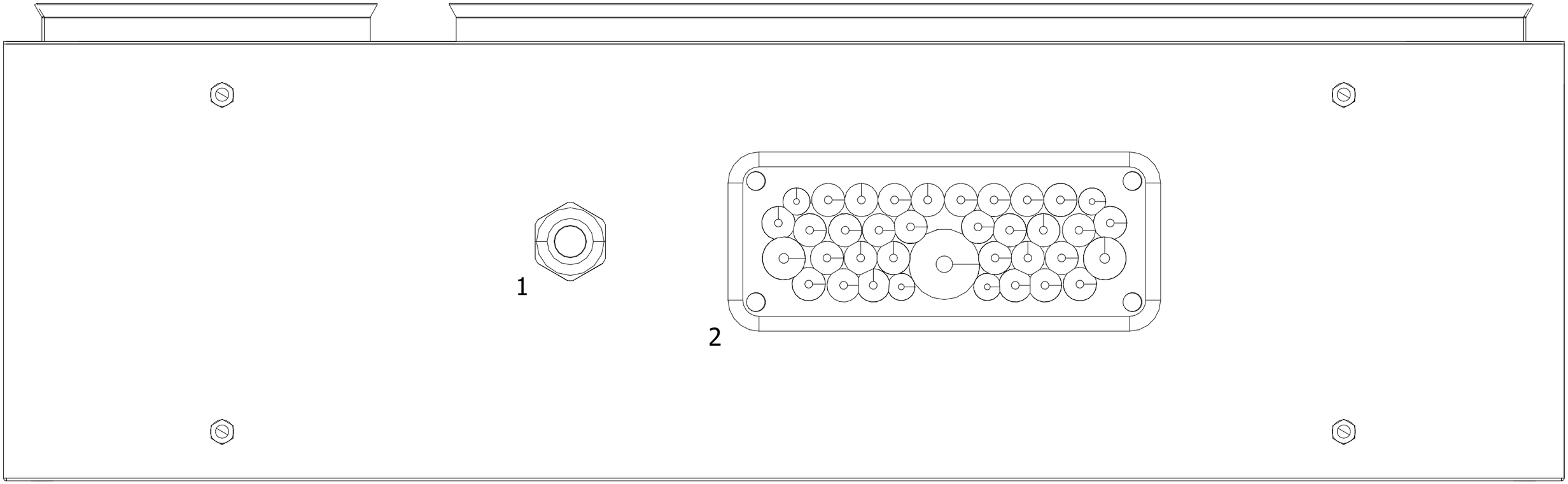

			Date	02/02/2015
			Elab.	Franco Meneghetti
Modification	Date	Name		

CM00009385

EP 8 FANS ALFA-LUVE

ALFA LU-VE

Bottom view

Mounting locations +

Function =

Page /10

Next +QE/1

Total pages 34

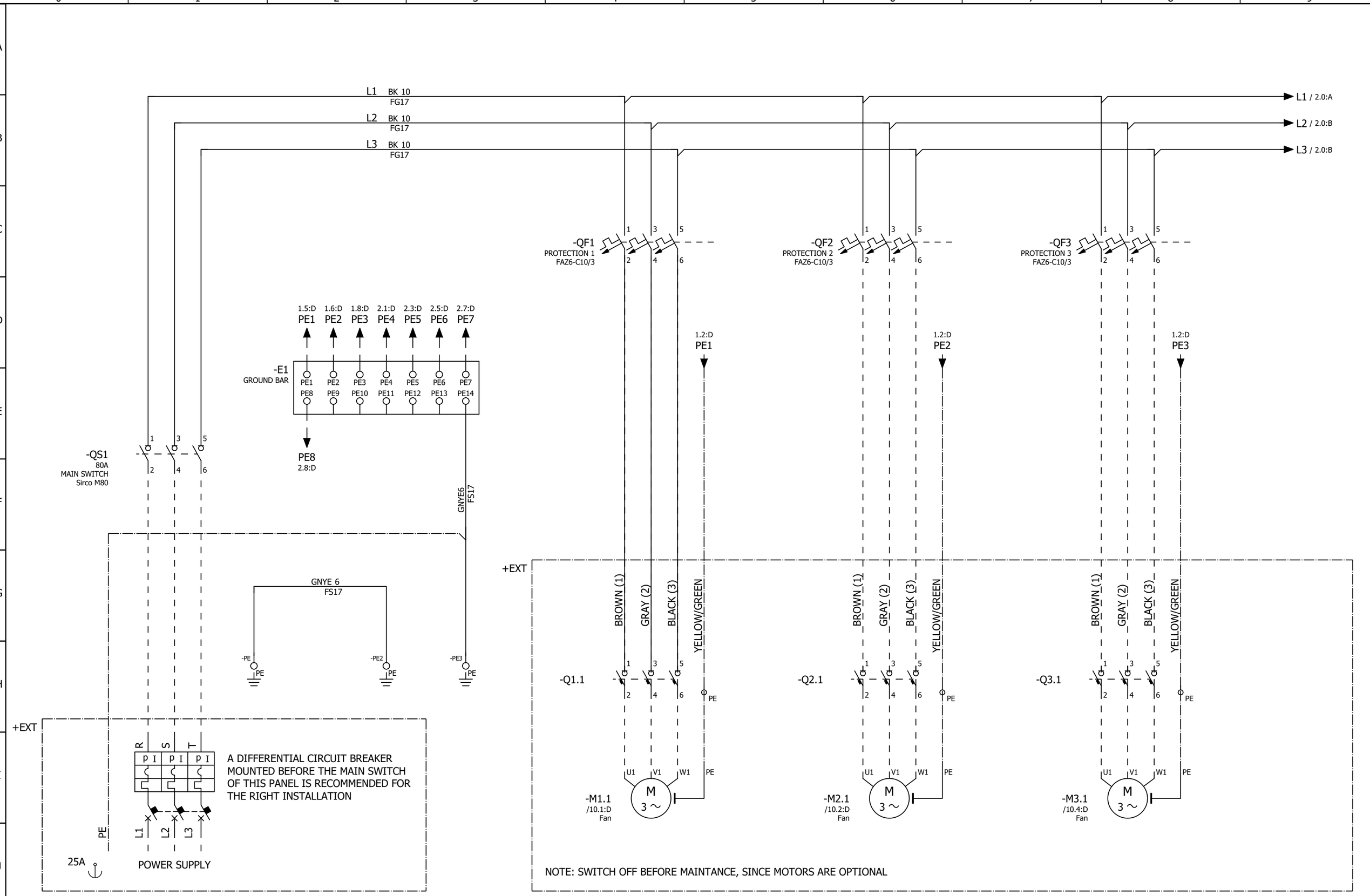

			Date	02/02/2015
			Elab.	Franco Meneghetti
Modification	Date	Name		

CM00009385

EP 8 FANS ALFA-LUVE

ALFA LU-VE

Power circuit

Mounting locations + QE

Function =

Page +QE/1

Next 2

Total pages 34

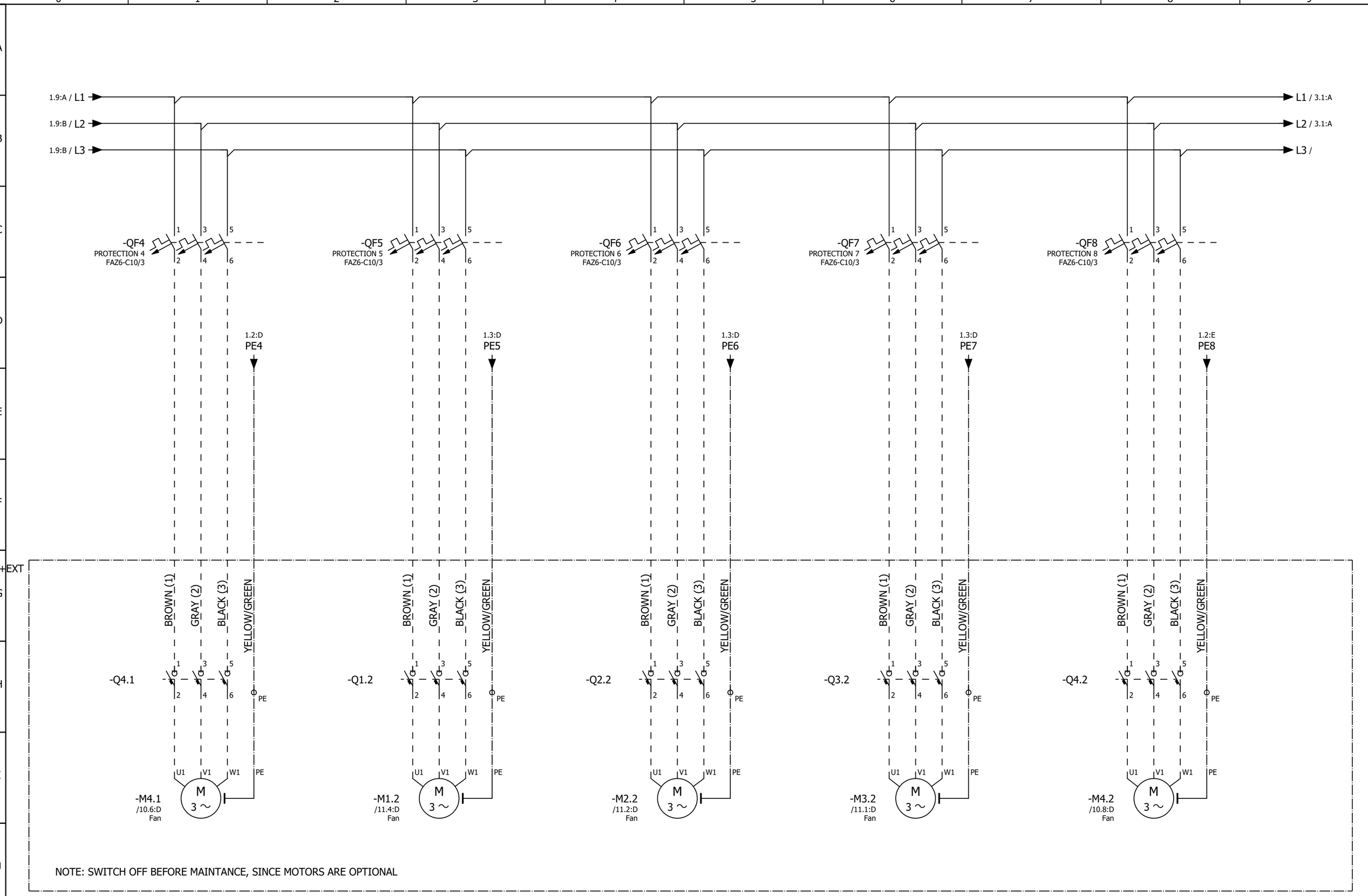

			Date	02/02/2015
			Elab.	Franco Meneghetti
Modification	Date	Name		

CM00009385

EP 8 FANS ALFA-LUVE

ALFA LU-VE

Power circuit

Mounting locations + QE

Function =

Page +QE/2

Next 3

Total pages 34

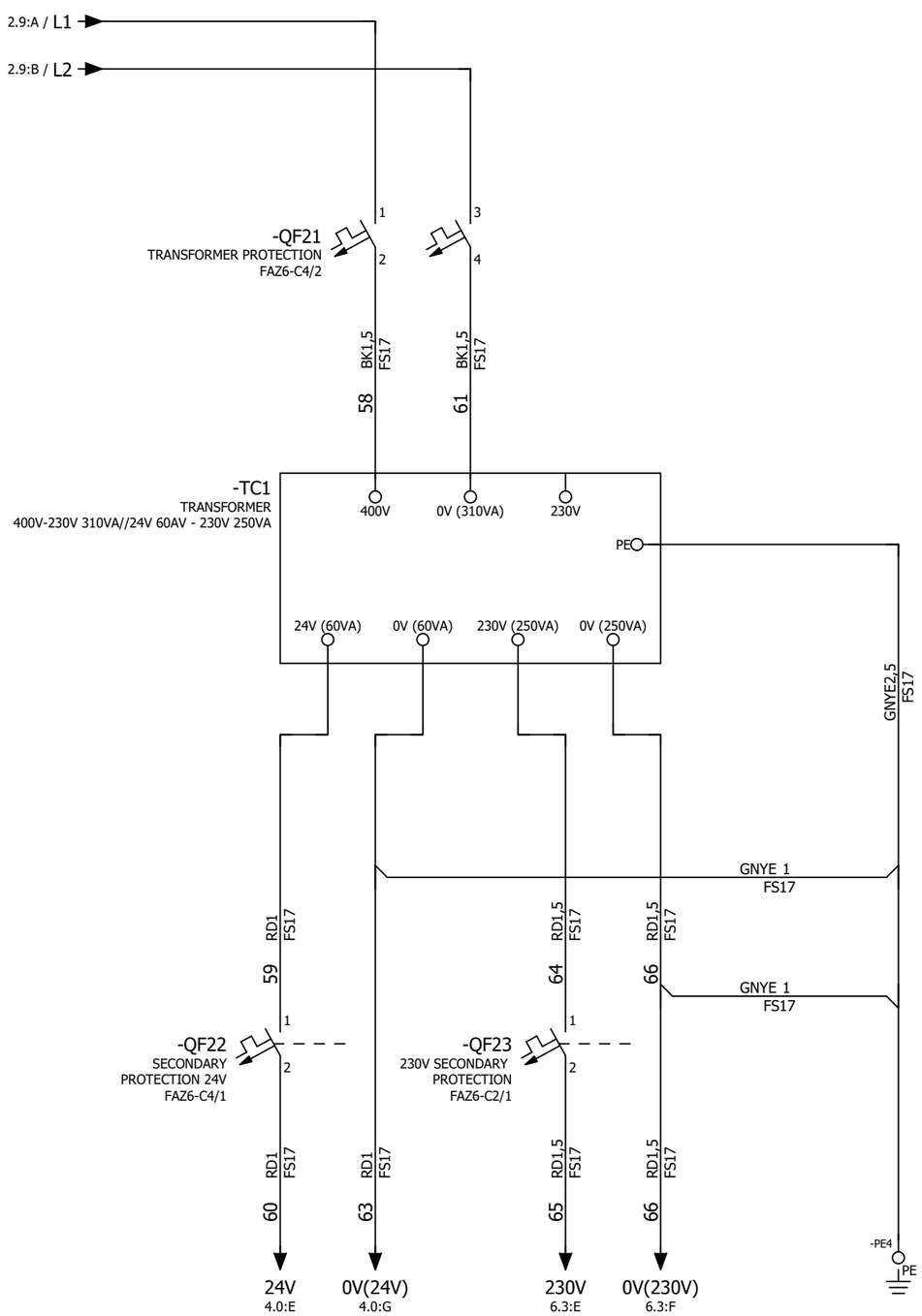

			Date	02/02/2015	CM00009385	ALFA LU-VE	Power circuit	Mounting locations + QE	Page +QE/3
			Elab.	Franco Meneghetti	EP 8 FANS ALFA-LUVE			Function =	Next 4
Modification	Date	Name							Total pages 34

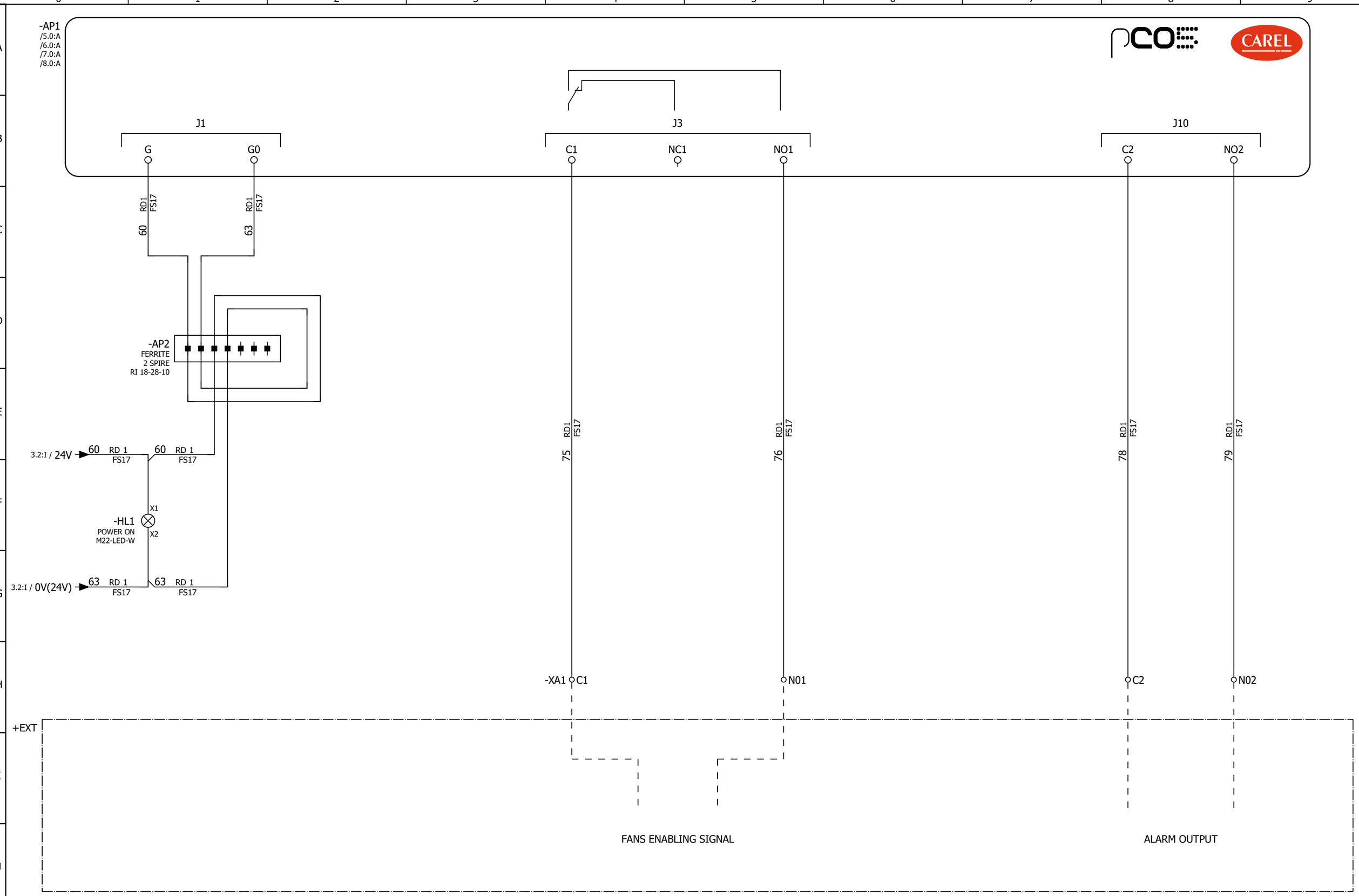

			Date	02/02/2015
			Elab.	Franco Meneghetti
Modification	Date	Name		

CM00009385

EP 8 FANS ALFA-LUVE

Auxiliary circuit

Mounting locations	+ QE
Function	=
Page	+QE/4
Next	5
Total pages	34

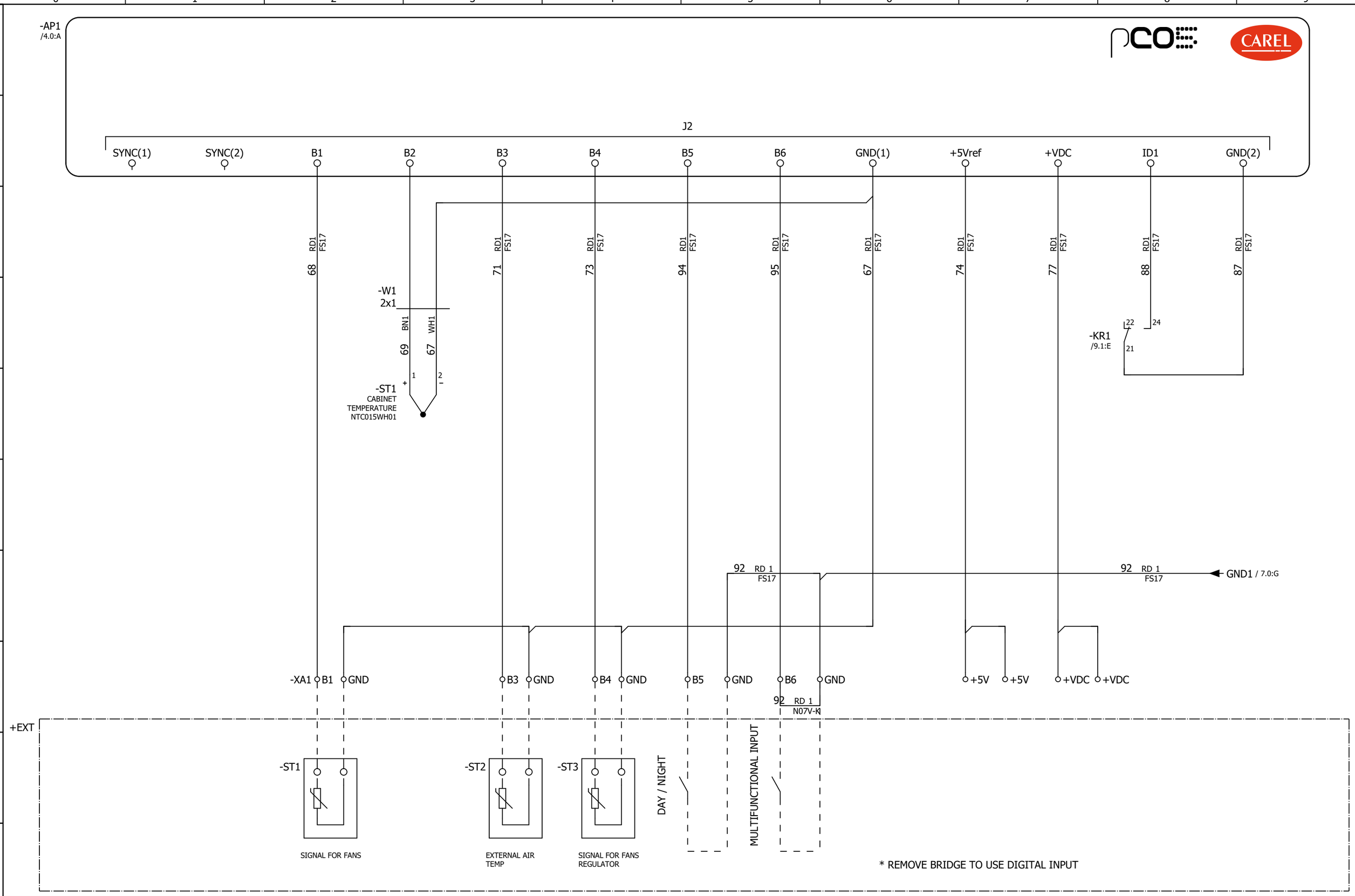

			Date	02/02/2015
			Elab.	Franco Meneghetti
Modification	Date	Name		

CM00009385

EP 8 FANS ALFA-LUVE

Auxiliary circuit

Mounting locations + QE

Function =

Page +QE/5

Next 5.a

Total pages 34

NO PT1000
B1 SIGNAL FOR FANS (NTC)
B2 E.P. TEMPERATURE (NTC)
B3 EXTERNAL AIR TEMPERATURE (NTC)
B4 ----------

WITH PT1000
B1 ----------
B2 E.P. TEMPERATURE (NTC)
B3 EXTERNAL AIR TEMPERATURE (NTC)
B4 SIGNAL FOR FANS (PT1000)

PROBE CONNECTIONS

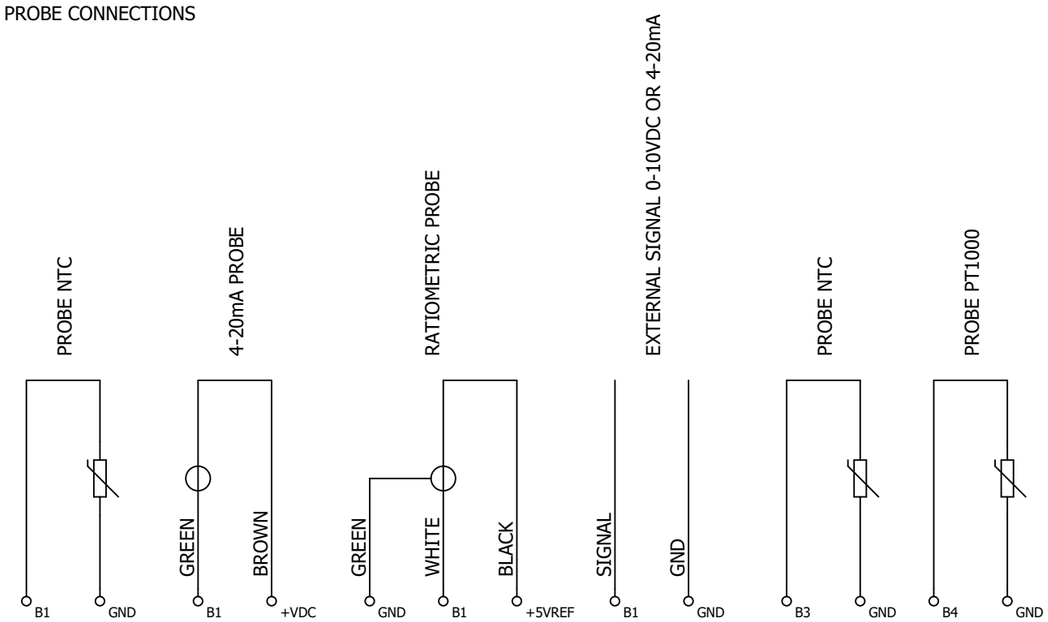

			Date	02/02/2015
			Elab.	Franco Meneghetti
Modification	Date	Name		

CM00009385

EP 8 FANS ALFA-LUVE

ALFA LU-VE

Auxiliary circuit

Mounting locations + QE

Function =

Page +QE/5.a

Next 6

Total pages 34

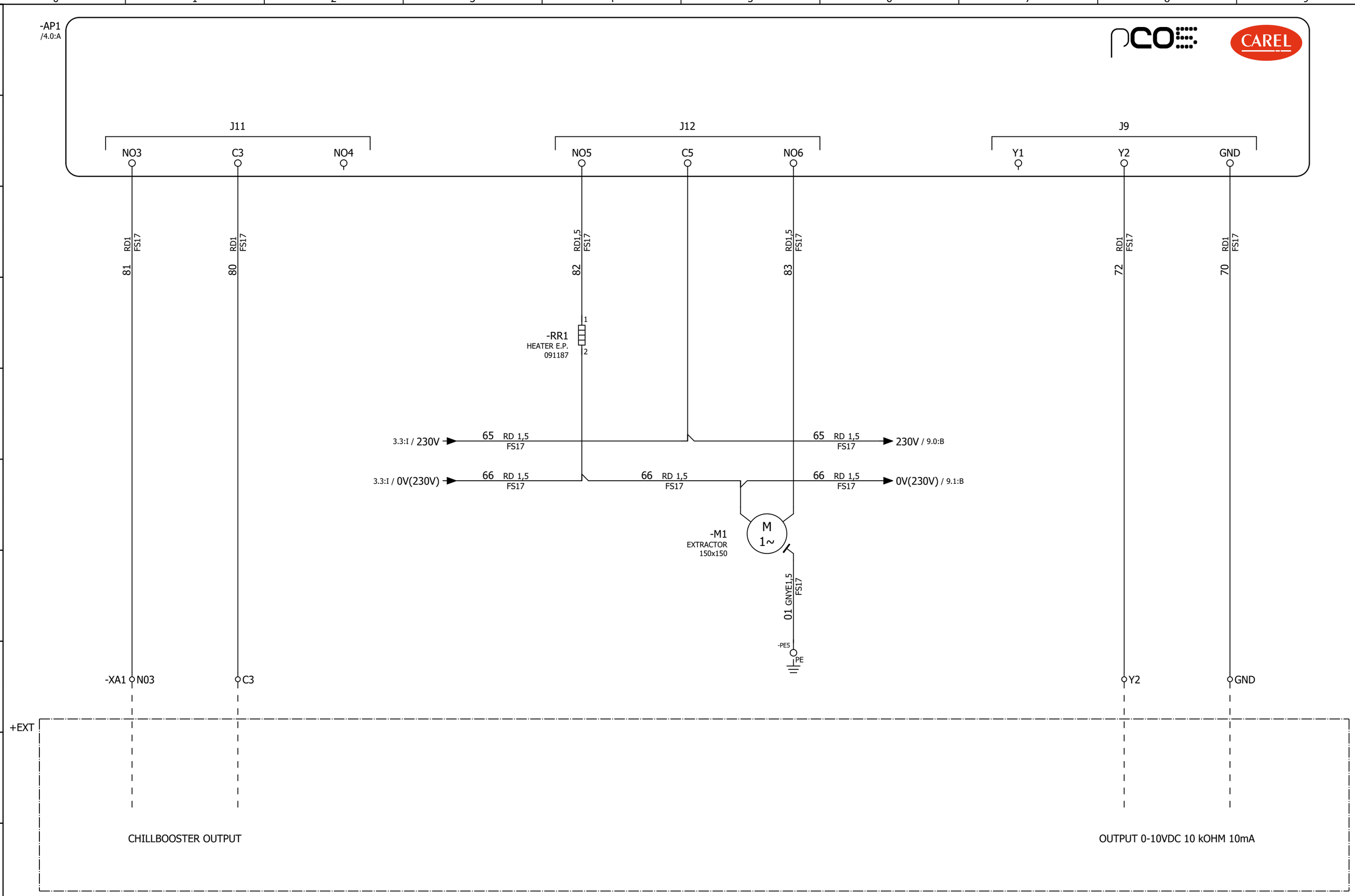

			Date	02/02/2015
			Elab.	Franco Meneghetti
Modification	Date	Name		

CM00009385

EP 8 FANS ALFA-LUVE

Auxiliary circuit

Mounting locations + QE

Function =

Page +QE/6

Next 7

Total pages 34

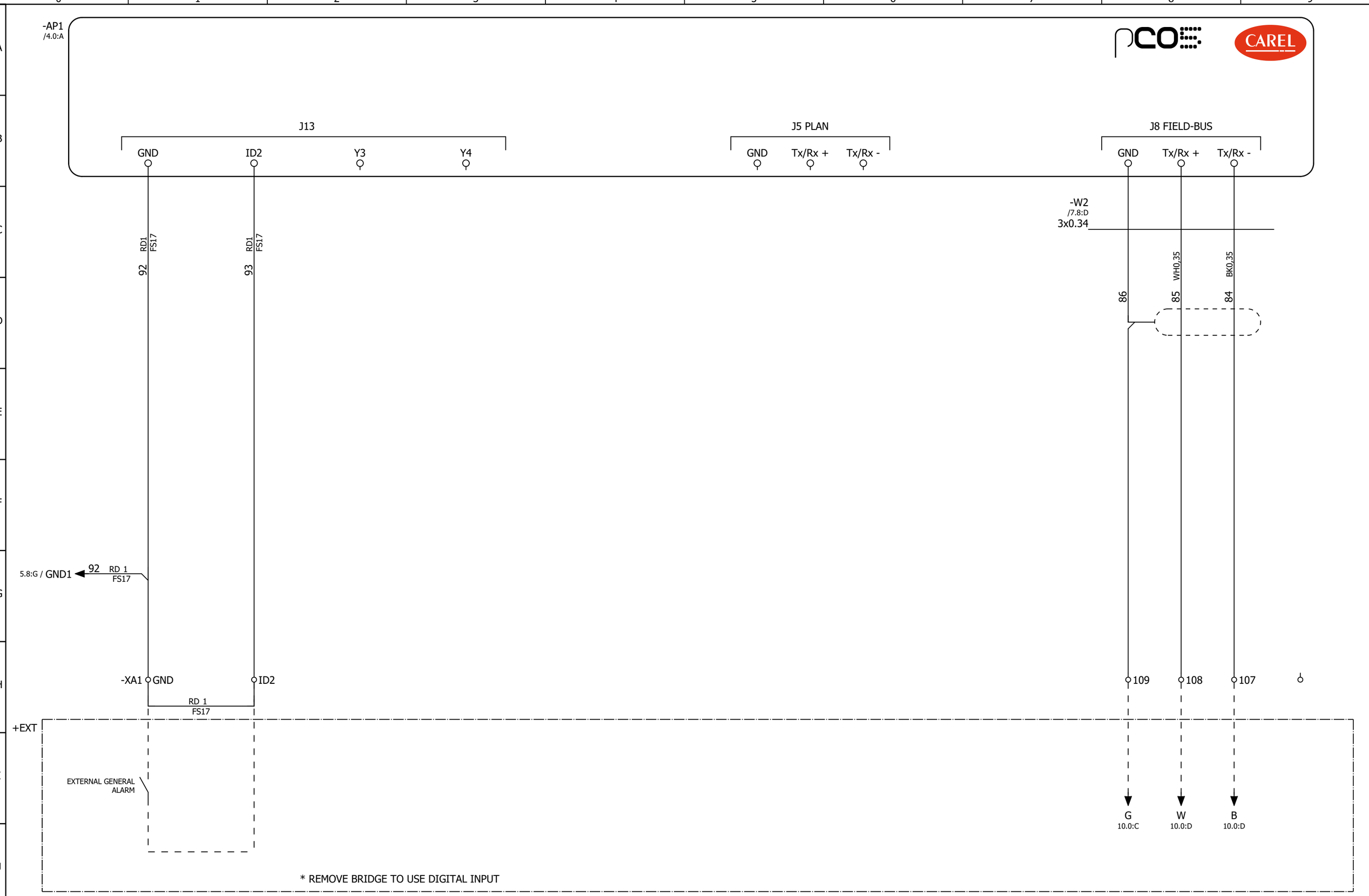

			Date	02/02/2015
			Elab.	Franco Meneghetti
Modification	Date	Name		

CM00009385

EP 8 FANS ALFA-LUVE

Auxiliary circuit

Mounting locations + QE

Function =

Page +QE/7

Next 8

Total pages 34

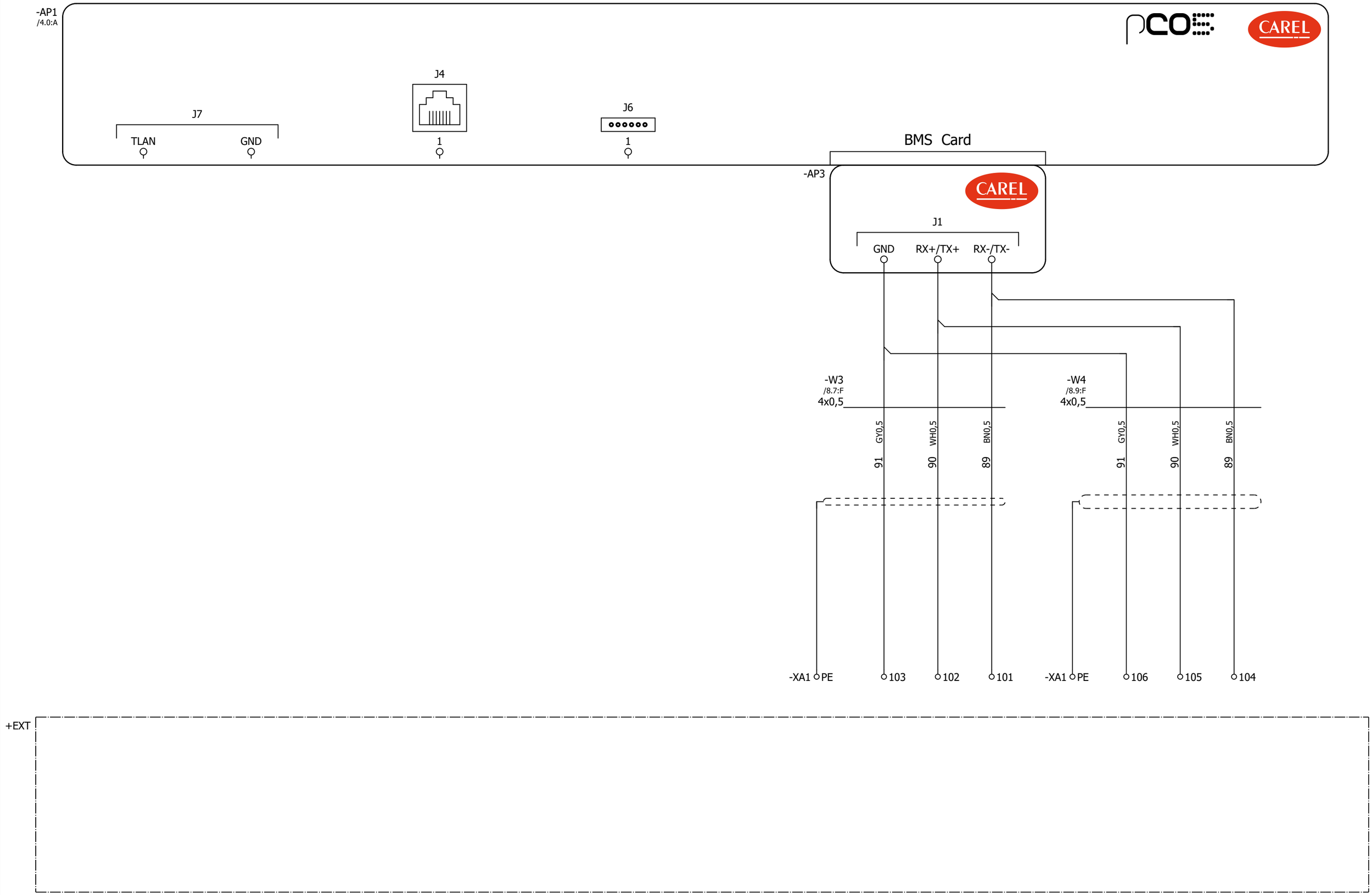

			Date	02/02/2015
			Elab.	Franco Meneghetti
Modification	Date	Name		

CM00009385

EP 8 FANS ALFA-LUVE

Auxiliary circuit

Mounting locations + QE

Function =

Page +QE/8

Next 9

Total pages 34

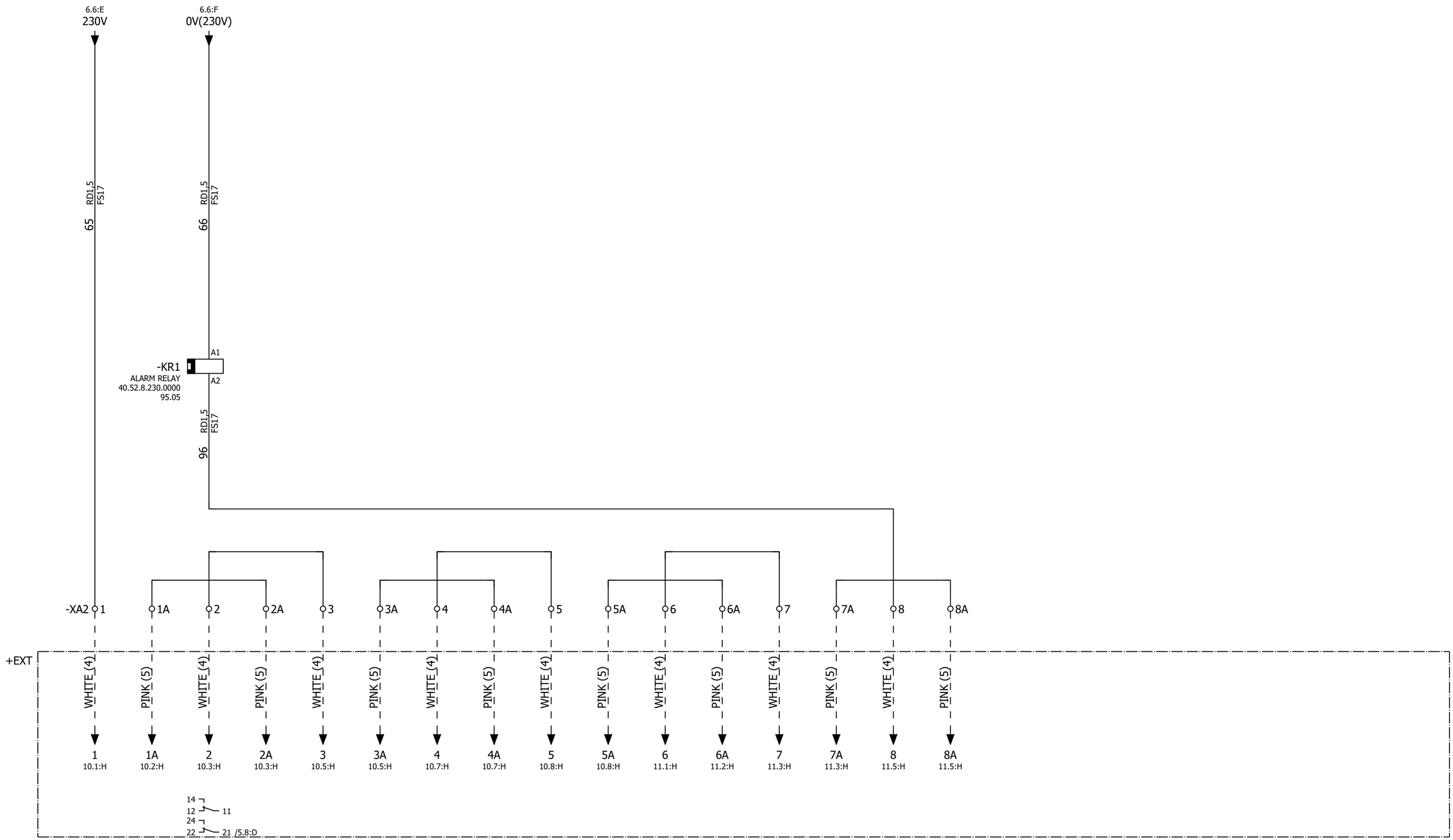

			Date	02/02/2015
			Elab.	Franco Meneghetti
Modification	Date	Name		

CM00009385

EP 8 FANS ALFA-LUVE

ALFA LU-VE

Auxiliary circuit

Mounting locations + QE

Function =

Page +QE/9

Next 10

Total pages 34

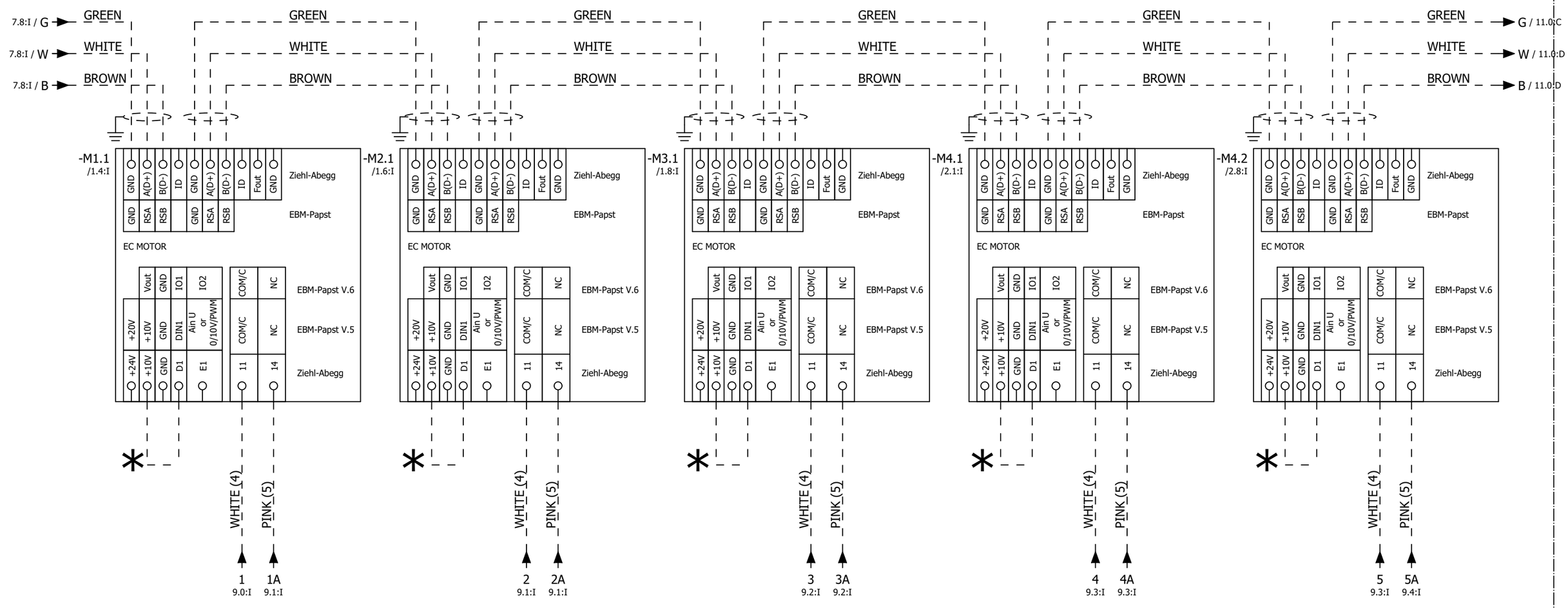

* CONNECTION NEEDED ONLY FOR ZIEHL-ABBEGG FANS

			Date	02/02/2015	CM00009385	ALFA LU-VE	Auxiliary circuit	Mounting locations + QE
			Elab.	Franco Meneghetti	EP 8 FANS ALFA-LUVE			Function =
Modification	Date	Name						

Page	+QE/10
Next	11
Total pages	34

+EXT

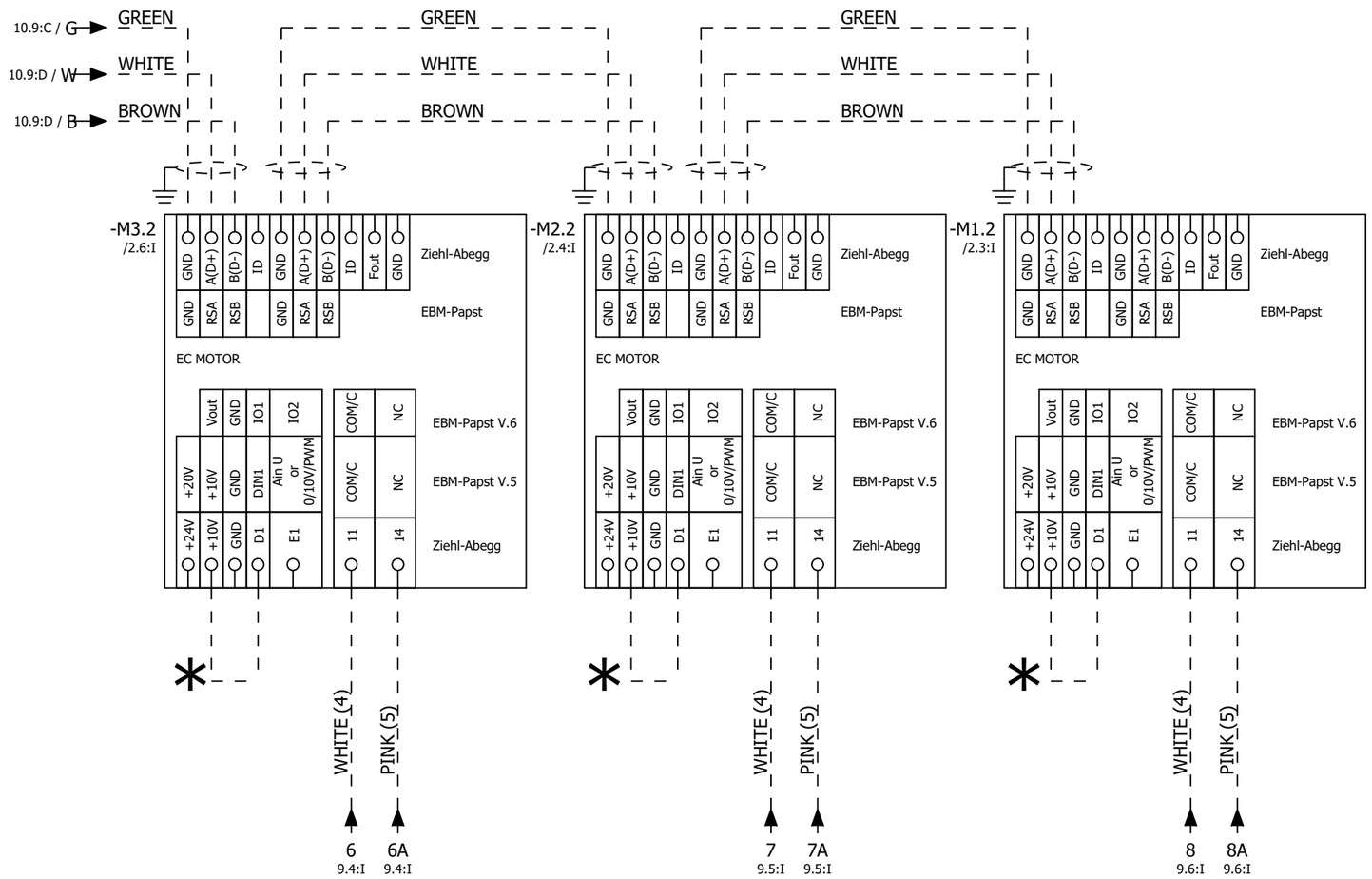

* CONNECTION NEEDED ONLY FOR ZIEHL-ABBEGG FANS

			Date	02/02/2015	CM00009385	ALFA LU-VE	Auxiliary circuit	Mounting locations + QE
			Elab.	Franco Meneghetti	EP 8 FANS ALFA-LUVE			Function =
Modification	Date	Name						

Page	+QE/11
Next	12
Total pages	34

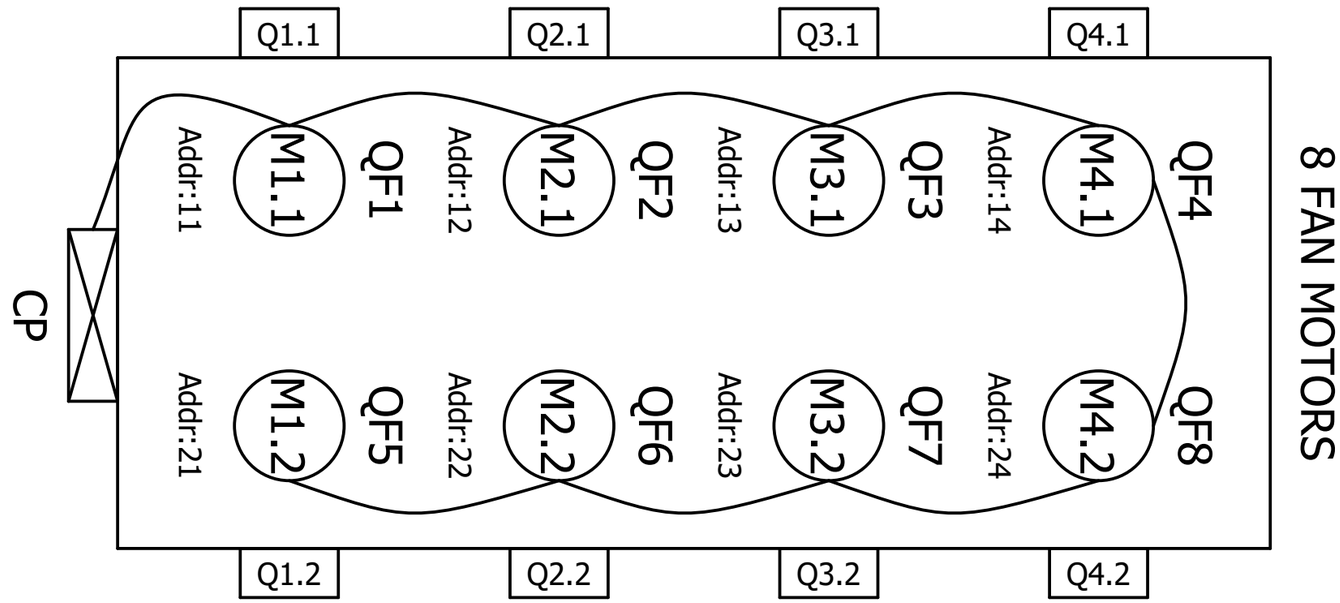

			Date	02/02/2015	CM00009385	ALFA LU-VE	Serial connection	Mounting locations + QE
			Elab.	Franco Meneghetti	EP 8 FANS ALFA-LUVE			Function =
Modification	Date	Name						

Page	+QE/12
Next	13
Total pages	34

CAREL INDUSTRIES S.p.A. - Società Unipersonale
Via dell'Industria, 11 - 35020 Brugine – Padova – Italia
Tel. (+39) 049.9716611 – Fax (+39) 049.9716600
www.carel.com – e-mail: carel@carel.com

Cap. Soc. € 10.000.000 i.v.
C.C.I.A.A. Padova Reg. Imp n. 4359090281
Part. IVA e Cod. Fisc. 04359090281
Società soggetta ad attività di direzione e coordinamento di Carel S.p.A.

CE

EU Declaration of Conformity

Manufacturer: **CAREL Industries S.p.A.**
Via dell'Industria, 11 35020 Brugine (PD) Italy

Electric Control Panels series Carel Power Solutions
Code :
Serial number:

CM00009385 / CM00009564

The manufacturer declares that all the above indicated products are in accordance with the EU Directives:

2006/95/EC (LVD)

and comply with the requirements of the following European standards:

EN 60204-1

Brugine, 01/09/2015

CAREL INDUSTRIES S.p.A.
Technical Director

Ing. Umberto Bianchini

Modification	Date	Name		Date	02/02/2015
			Elab.	Franco Meneghetti	

CM00009385
EP 8 FANS ALFA-LUVE

ALFA LU-VE

Certificazione

Function	=	Mounting locations	+ QE
Total pages	34	Next	=REP1+/1,0
		Page	+QE/13

Multicore cables scheme

Cable type PROBE CABLE

Oracle code PROBE CABLE

Total Cable Length Cut:

Departure | Cross ref. | Terminator

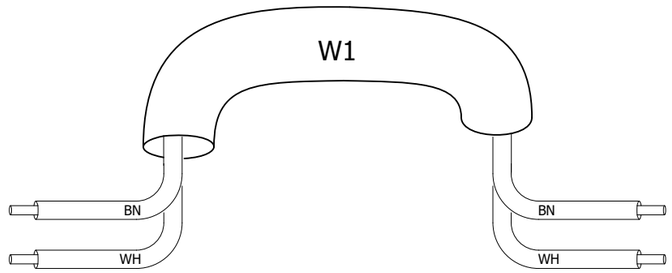

Terminator | Cross ref. | Arrival

Unsheathing cable departure

Unsheathing cable arrival

			Date	02/02/2015	CM00009385	ALFA LU-VE	Multicore cables scheme	Mounting locations +	Page =REP1/1,0
			Elab.	Franco Meneghetti	EP 8 FANS ALFA-LUVE				Next 1,1
Modification	Date	Name						Function =REP1	Total pages 34

Multicore cables scheme

Cable type Belden

Oracle code 1008176AXX

Total Cable Length Cut:

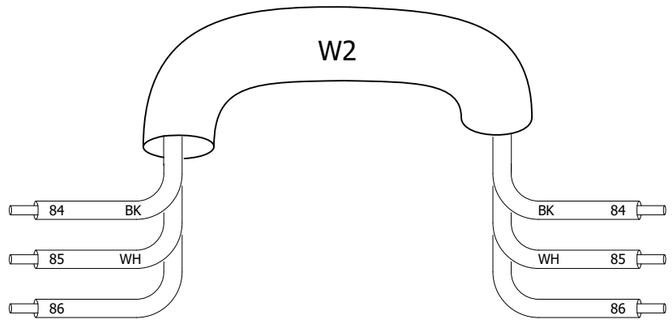

Departure	Cross ref.	Terminator	Terminator	Cross ref.	Arrival
XA1:107:A	+QE/7.8:H			+QE/7.8:B	+QE-AP1:J8 FIELD-BUS:Tx/Rx -
XA1:108:B	+QE/7.8:H			+QE/7.8:B	+QE-AP1:J8 FIELD-BUS:Tx/Rx +
XA1:109:A	+QE/7.8:H			+QE/7.8:B	+QE-AP1:J8 FIELD-BUS:GND

Unsheathing cable departure

Unsheathing cable arrival

			Date	02/02/2015	CM00009385	ALFA LU-VE	Multicore cables scheme	Mounting locations +	Page =REP1/1,1
			Elab.	Franco Meneghetti	EP 8 FANS ALFA-LUVE				Next 1,2
								Function =REP1	Total pages 34
Modification	Date	Name							

Multicore cables scheme

Carel STD-V2

Cable type Shielded 3x0.5

Oracle code 1008019AXX

Total Cable Length Cut:

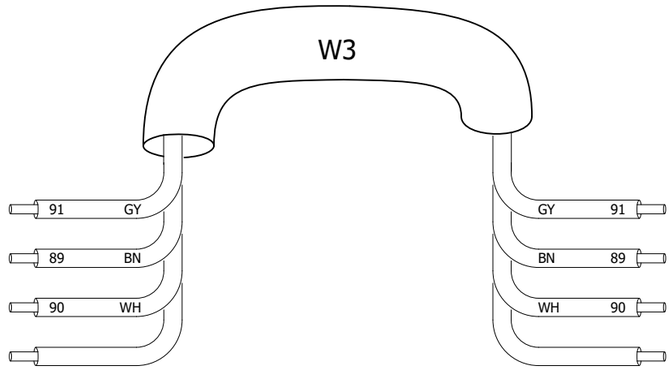

Departure	Cross ref.	Terminator	Terminator	Cross ref.	Arrival
XA1:103:A	+QE/8.6:H			+QE/8.6:C	+QE-AP3:J1:GND
XA1:101:A	+QE/8.7:H			+QE/8.7:C	+QE-AP3:J1:RX-/TX-
XA1:102:B	+QE/8.6:H			+QE/8.6:C	+QE-AP3:J1:RX+/TX+

Unsheathing cable departure

Unsheathing cable arrival

			Date	02/02/2015
			Elab.	Franco Meneghetti
Modification	Date	Name		

CM00009385

EP 8 FANS ALFA-LUVE

ALFA LU-VE

Multicore cables scheme

Mounting locations +

Function =REP1

Page =REP1/1,2

Next 1,3

Total pages 34

Multicore cables scheme

Cable type Shielded 3x0.5

Oracle code 1008019AXX

Total Cable Length Cut:

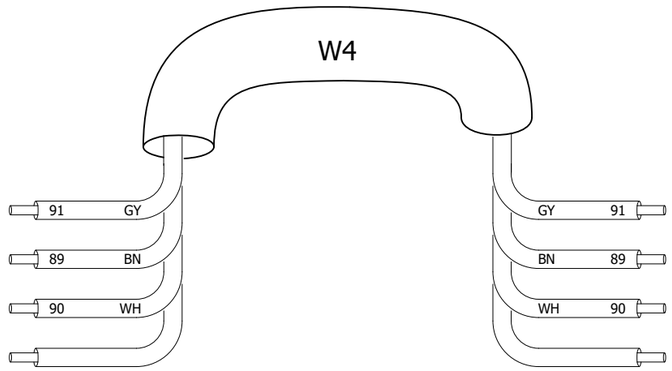

Departure	Cross ref.	Terminator	Terminator	Cross ref.	Arrival
XA1:106:B	+QE/8.8:H			+QE/8.6:C	+QE-AP3:J1:GND
XA1:104:B	+QE/8.8:H			+QE/8.7:C	+QE-AP3:J1:RX-/TX-
XA1:105:A	+QE/8.8:H			+QE/8.6:C	+QE-AP3:J1:RX+/TX+

Unsheathing cable departure

Unsheathing cable arrival

			Date	02/02/2015
			Elab.	Franco Meneghetti
Modification	Date	Name		

CM00009385

EP 8 FANS ALFA-LUVE

Multicore cables scheme

Mounting locations +

Function =REP1

Page =REP1/1,3

Next 2,0

Total pages 34

Terminal diagram

Terminal strip

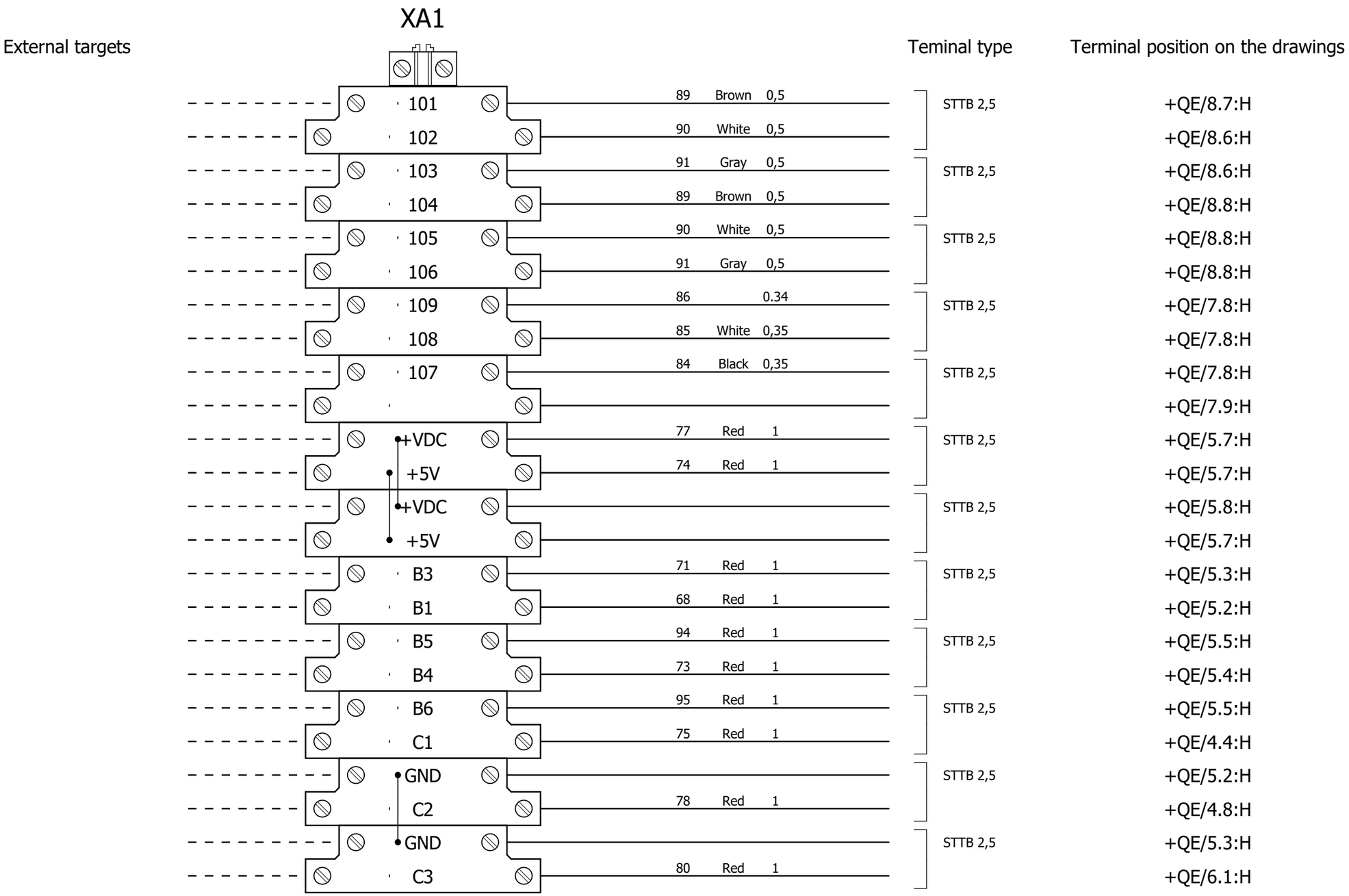

			Date	02/02/2015	CM00009385	ALFA LU-VE	Terminal strip	Mounting locations +	Page =REP1/2,0
			Elab.	Franco Meneghetti	EP 8 FANS ALFA-LUVE				Next 2,0.a
Modification	Date	Name						Function =REP1	Total pages 34

Terminal diagram

Terminal strip

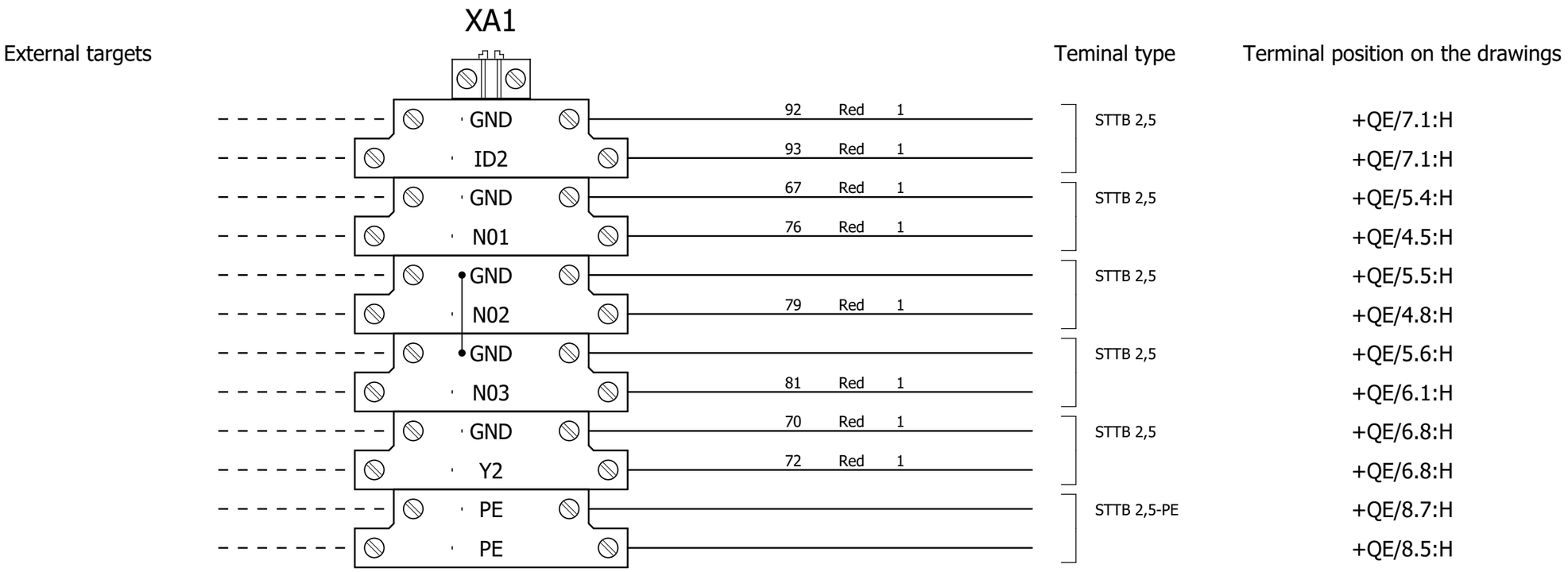

			Date	02/02/2015	CM00009385	ALFA LU-VE	Terminal strip	Mounting locations +	Page =REP1/2,0.a
			Elab.	Franco Meneghetti	EP 8 FANS ALFA-LUVE				Next 2,1
								Function =REP1	Total pages 34
Modification	Date	Name							

Terminal diagram

Terminal strip

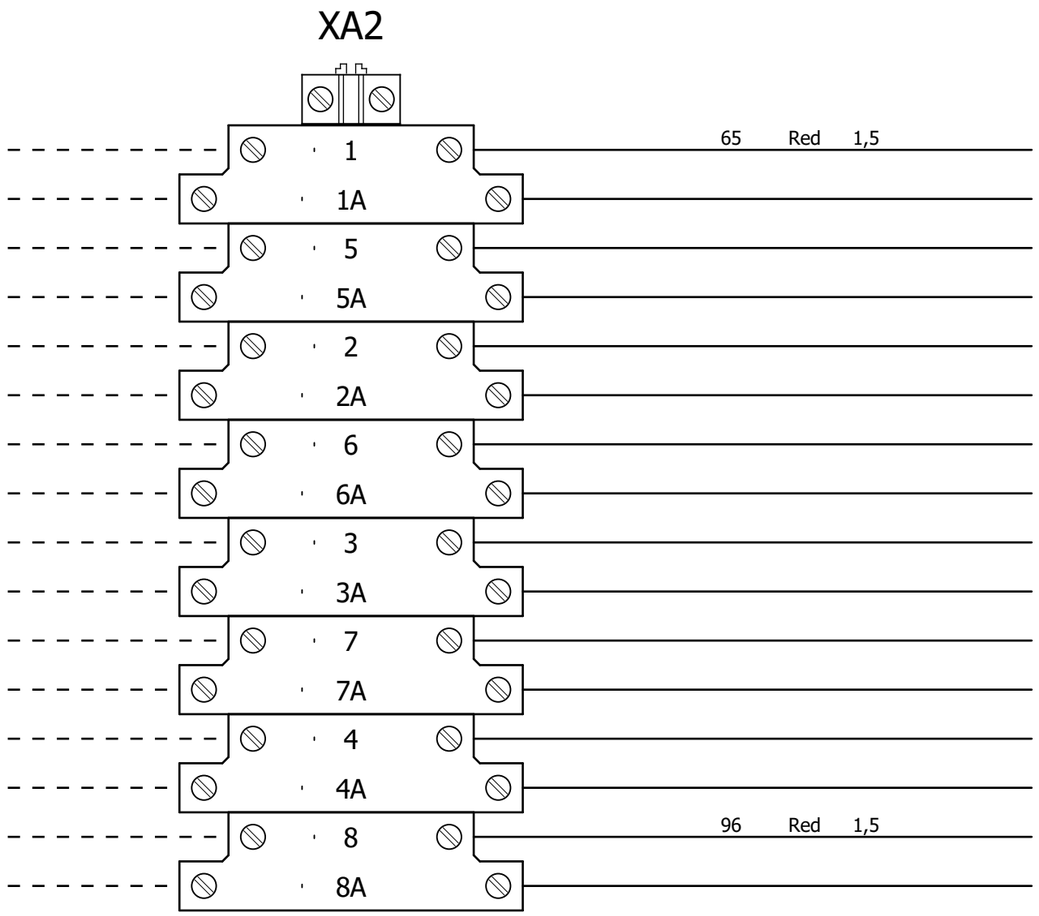

External targets	Teminal type	Terminal position on the drawings
	STTB 2,5	+QE/9.0:H
		+QE/9.1:H
	STTB 2,5	+QE/9.3:H
		+QE/9.4:H
	STTB 2,5	+QE/9.1:H
		+QE/9.1:H
	STTB 2,5	+QE/9.4:H
		+QE/9.4:H
	STTB 2,5	+QE/9.2:H
		+QE/9.2:H
	STTB 2,5	+QE/9.5:H
		+QE/9.5:H
	STTB 2,5	+QE/9.3:H
		+QE/9.3:H
	STTB 2,5	+QE/9.6:H
		+QE/9.6:H

BOM internal panel

InternoQE_F01_003

Short name	Designation	Function text	Position	Manufacturer	Component tipe	Oracle code
AP1	Programmable control		=+QE/4.0:A	CAREL	PCO Compact	PCOXLV0DB0
AP2	Damping magnet, M 5.0	FERRITE 2 SPIRE	=+QE/4.1:D	KE-KITAGAWA	FERRITE CORE	0907877AXX
AP3	Scheda seriale BMS		=+QE/8.6:B	CAREL	Scheda seriale BMS	PCOS004850
E1	Earth terminal	GROUND BAR	=+QE/1.2:D	SCHNEIDER ELECTRIC	14977	2217096CEL
HL1	White lamp 24Vac	POWER ON	=+QE/4.1:F	EATON ELECTRIC	M22-LED-W	0505103CEL
HL1	Plate	=	=+QE/4.1:F	CEMBRE	15X27	1800243AXX
HL1	Support plate	=	=+QE/4.1:F	CEMBRE	D22 17X30	1800242AXX
HL1	Glass plate	=	=+QE/4.1:F	CEMBRE	15X27	1800244AXX
HL1	Support	=	=+QE/4.1:F	EATON ELECTRIC	M22-A	0505184AXX
HL1	White indicator plate	=	=+QE/4.1:F	EATON ELECTRIC	216771	0505111CEL
KR1	Relay	ALARM RELAY	=+QE/9.1:E	FINDER	40.52.8.230.0000	0100751CEL
KR1	Base element	=	=+QE/9.1:E	FINDER	95.05	5931384AXX
KR2	Base element		(Quadro elettri co)	FINDER	95.05	5931384AXX
KR2	Relay		(Quadro elettri co)	FINDER	40.52.8.230.0000	0100751CEL
M1	Internal fan	EXTRACTOR	=+QE/6.5:F	EZM	150x150	1312697AXX
PE	GROUND		=+QE/1.1:H		PE	PE
PE2	GROUND		=+QE/1.2:H		PE	PE
PE3	GROUND		=+QE/1.3:H		PE	PE
PE4	GROUND		=+QE/3.4:H		PE	PE
PE5	GROUND		=+QE/6.5:G		PE	PE
QF1	Power circuit breaker	PROTECTION 1	=+QE/1.4:C	EATON ELECTRIC	FAZ6-C10/3	0403856CEL
QF2	Power circuit breaker	PROTECTION 2	=+QE/1.6:C	EATON ELECTRIC	FAZ6-C10/3	0403856CEL
QF3	Power circuit breaker	PROTECTION 3	=+QE/1.8:C	EATON ELECTRIC	FAZ6-C10/3	0403856CEL

BOM internal panel

InternoQE_F01_003

Short name	Designation	Function text	Position	Manufacturer	Component tipe	Oracle code
QF4	Power circuit breaker	PROTECTION 4	=+QE/2.1:C	EATON ELECTRIC	FAZ6-C10/3	0403856CEL
QF5	Power circuit breaker	PROTECTION 5	=+QE/2.3:C	EATON ELECTRIC	FAZ6-C10/3	0403856CEL
QF6	Power circuit breaker	PROTECTION 6	=+QE/2.4:C	EATON ELECTRIC	FAZ6-C10/3	0403856CEL
QF7	Power circuit breaker	PROTECTION 7	=+QE/2.6:C	EATON ELECTRIC	FAZ6-C10/3	0403856CEL
QF8	Power circuit breaker	PROTECTION 8	=+QE/2.8:C	EATON ELECTRIC	FAZ6-C10/3	0403856CEL
QF21	Power circuit breaker	TRANSFORMER PROTECTION	=+QE/3.2:B	EATON ELECTRIC	FAZ6-C4/2	0403468AXX
QF22	Power circuit breaker	SECONDARY PROTECTION 24V	=+QE/3.2:G	EATON ELECTRIC	FAZ6-C4/1	0403824AXX
QF23	Power circuit breaker	230V SECONDARY PROTECTION	=+QE/3.3:G	EATON ELECTRIC	FAZ6-C2/1	0403819AXX
QS1	Disconnect switch	MAIN SWITCH	=+QE/1.1:E	SOCOMEC	Sirco M80	0402331AXX
QS1	Operation	=	=+QE/1.1:E	SOCOMEC	Y/R 16-80A	0402333AXX
RR1	Scaldiglia 200W 230V	HEATER E.P.	=+QE/6.4:D	EZM	091187	5729759AXX
ST1	SENSOR NTC WH IP68 -50T105 CABLE 1,5M	CABINET TEMPERATURE	=+QE/5.3:E	CAREL	NTC015WH01	NTC015WH01
TC1	TRANSFORMER	TRANSFORMER	=+QE/3.2:D		400V-230V 310VA//24V 60AV - 230V 250VA	0910244AXX

BOM external panel

EsternoQE_F01_003

Place	Short name	Function text	Position	Technical characteristics
+EXT	M1.1	Fan	=+QE/1.4:I	
+EXT	M1.2	=	=+QE/2.3:I	
+EXT	M2.1	=	=+QE/1.6:I	
+EXT	M2.2	=	=+QE/2.4:I	
+EXT	M3.1	=	=+QE/1.8:I	
+EXT	M3.2	=	=+QE/2.6:I	
+EXT	M4.1	=	=+QE/2.1:I	
+EXT	M4.2	=	=+QE/2.8:I	
+EXT	ST1	SIGNAL FOR FANS	=+QE/5.2:I	
+EXT	ST2	EXTERNAL AIR TEMP	=+QE/5.3:I	
+EXT	ST3	SIGNAL FOR FANS REGULATOR	=+QE/5.4:I	

alfa.luvegroup.com

Product code	CM00009386	Rev	7
Project description	EP 10 FANS ALFA-LUVE		

Supply voltage	3P+N+E - 400V - 50Hz	Operating temperature	40°C
Rated current	63A Icc 6KA		
Auxiliary voltage	24Vac/230Vac		

Designed by	Franco Meneghetti	on	02/02/2015
Checked by	Luca Tessaro	on	11/12/2015
Approved by	Mattia Bortolotto	on	11/12/2015

NOT ALLOWED DELIVER TO THIRD PARTIES OR REPRODUCE THIS DOCUMENT NOT USE THE CONTENT OR OTHERWISE MAKE KNOWN TO THIRD PARTIES WITHOUT OUR EXPRESS PERMISSION. ANY INFRINGEMENT WILL RESULT IN DAMAGES SUFFERED. And it MADE SUBJECT TO ALL RIGHTS UNDER PATENTS OR MODELS

Cables Range

Cross-sect	N07V-K Range (A)	N07G9 Range (A)
0,5	\	NOT AVAILABLE
0,75	\	NOT AVAILABLE
1	8A	12A
1,5	11A	16A
2,5	15A	22.4A
4	20A	29.6A
6	26A	38.4A
10	36A	52.8A
16	48A	70.4A
25	64A	93.6A
35	80A	115.2A
50	95A	140A
95	150A	177.6A
120	170A	215.2A
150	195A	NOT AVAILABLE
185	220A	NOT AVAILABLE
240	260A	NOT AVAILABLE
300	300A	NOT AVAILABLE

Colors Table

Colors	Short name
Red	RD
Black	BK
Yellow	YE
Yellow\Green	GNYE
Orange	OG
Light blue	TQ
Blue	BU
Pink	PK
White	WH
Gray	GY
Brown	BN
Green	GN
Purple	VT
\	
\	
\	
\	

REVIEW TABLE

Rev.	Technical name	Date	Note
01	Meneghetti F.	17/03/2015	- -
02	Meneghetti F.	01/07/2015	- -
03	Meneghetti F.	11/12/2015	- -
04	Meneghetti F.	09/02/2016	- -
05	Meneghetti F.	12/06/2017	- -
06	Meneghetti F.	15/11/2018	- -
07	Quaggia L.	10/09/2019	- -

Table of contents

F06_003

Page	Page type	Page description	Date	Edited by
/1	Title page / cover sheet	Title page	03/02/2020	Luca Quaggia
/2	Pre-planning	Technical information	03/02/2020	Luca Quaggia
/3	Table of contents	Table of contents	03/02/2020	Luca Quaggia
/4	Model view	General view	03/02/2020	Luca Quaggia
/5	Model view	View of all sides	03/02/2020	Luca Quaggia
/6	Model view	Mounting plate view	03/02/2020	Luca Quaggia
/7	Model view	Door view	03/02/2020	Luca Quaggia
/8	Model view	Guides view	03/02/2020	Luca Quaggia
/9	Model view	Channels view	03/02/2020	Luca Quaggia
/10	Model view	Bottom view	03/02/2020	Luca Quaggia
+QE/1	Schematic multi-line	Power circuit	03/02/2020	Luca Quaggia
+QE/2	Schematic multi-line	Power circuit	03/02/2020	Luca Quaggia
+QE/3	Schematic multi-line	Power circuit	03/02/2020	Luca Quaggia
+QE/4	Schematic multi-line	Power circuit	03/02/2020	Luca Quaggia
+QE/5	Schematic multi-line	Auxiliary circuit	03/02/2020	Luca Quaggia
+QE/6	Schematic multi-line	Auxiliary circuit	03/02/2020	Luca Quaggia
+QE/6.a	Schematic multi-line	Auxiliary circuit	03/02/2020	Luca Quaggia
+QE/7	Schematic multi-line	Auxiliary circuit	03/02/2020	Luca Quaggia
+QE/8	Schematic multi-line	Auxiliary circuit	03/02/2020	Luca Quaggia
+QE/9	Schematic multi-line	Auxiliary circuit	03/02/2020	Luca Quaggia
+QE/10	Schematic multi-line	Auxiliary circuit	03/02/2020	Luca Quaggia
+QE/11	Schematic multi-line	Auxiliary circuit	03/02/2020	Luca Quaggia
+QE/12	Schematic multi-line	Auxiliary circuit	03/02/2020	Luca Quaggia
+QE/13	Graphic	Serial connection	03/02/2020	Luca Quaggia
+QE/14	Graphic	Certificazione	03/02/2020	Luca Quaggia
=REP1/1,0	Cable diagram	Multicore cables scheme	03/02/2020	Luca Quaggia
=REP1/1,1	Cable diagram	Multicore cables scheme	03/02/2020	Luca Quaggia
=REP1/1,2	Cable diagram	Multicore cables scheme	03/02/2020	Luca Quaggia
=REP1/1,3	Cable diagram	Multicore cables scheme	03/02/2020	Luca Quaggia
=REP1/2,0	Terminal diagram	Terminal strip	03/02/2020	Luca Quaggia
=REP1/2,0.a	Terminal diagram	Terminal strip	03/02/2020	Luca Quaggia
=REP1/2,1	Terminal diagram	Terminal strip	03/02/2020	Luca Quaggia
=REP1/3,0	Parts list	BOM internal panel	03/02/2020	Luca Quaggia
=REP1/3,0.a	Parts list	BOM internal panel	03/02/2020	Luca Quaggia
=REP1/4,0	Parts list	BOM external panel	03/02/2020	Luca Quaggia

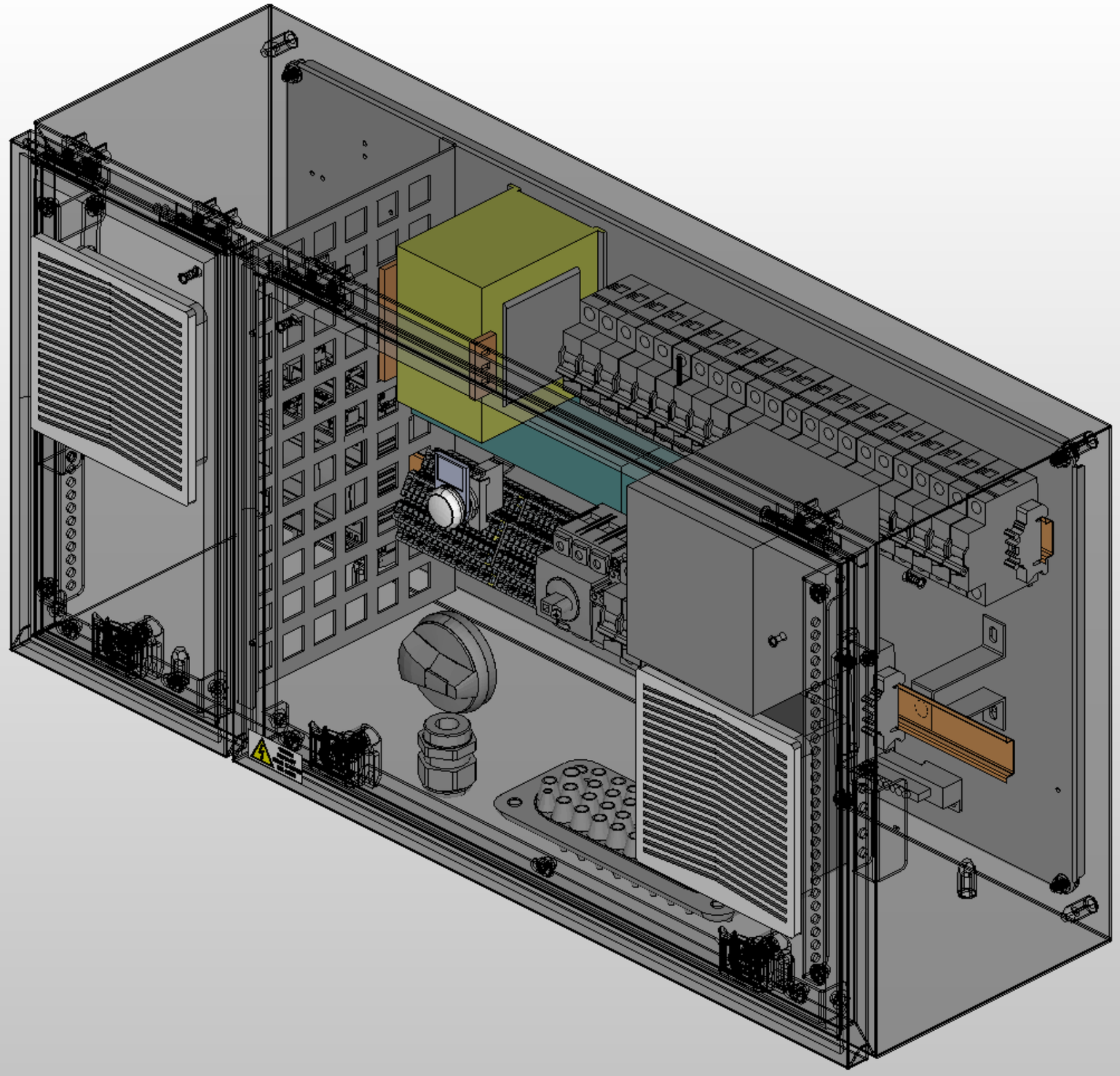

			Date	02/02/2015	CM00009386	ALFA LU-VE	General view	Mounting locations +	Page /4
			Elab.	Franco Meneghetti	EP 10 FANS ALFA-LUVE				Next 5
								Function =	Total pages 35
Modification	Date	Name							

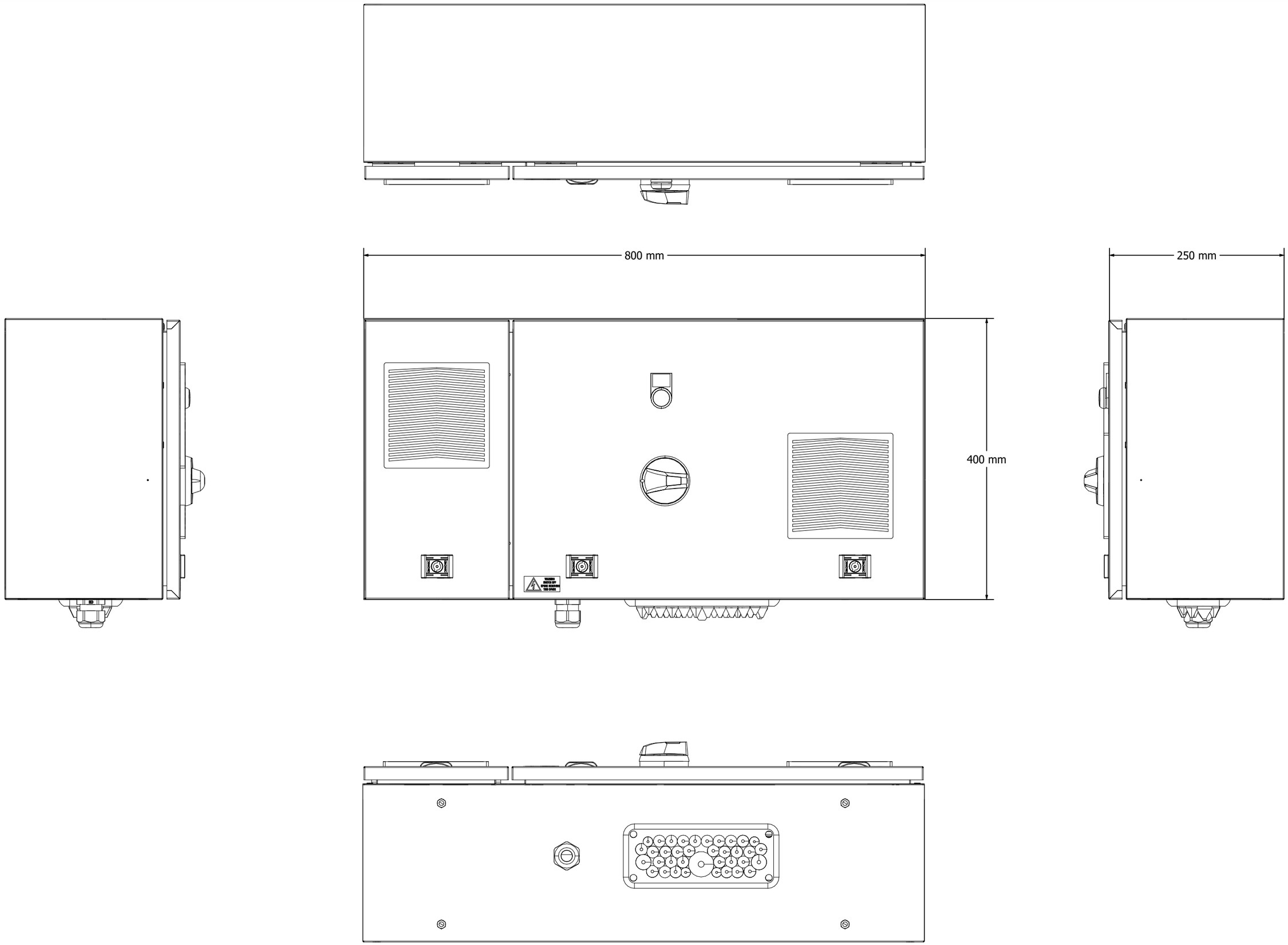

			Date	02/02/2015	CM00009386	ALFA LU-VE	View of all sides	Mounting locations +	Page /5
			Elab.	Franco Meneghetti	EP 10 FANS ALFA-LUVE				Next 6
Modification	Date	Name						Function =	Total pages 35

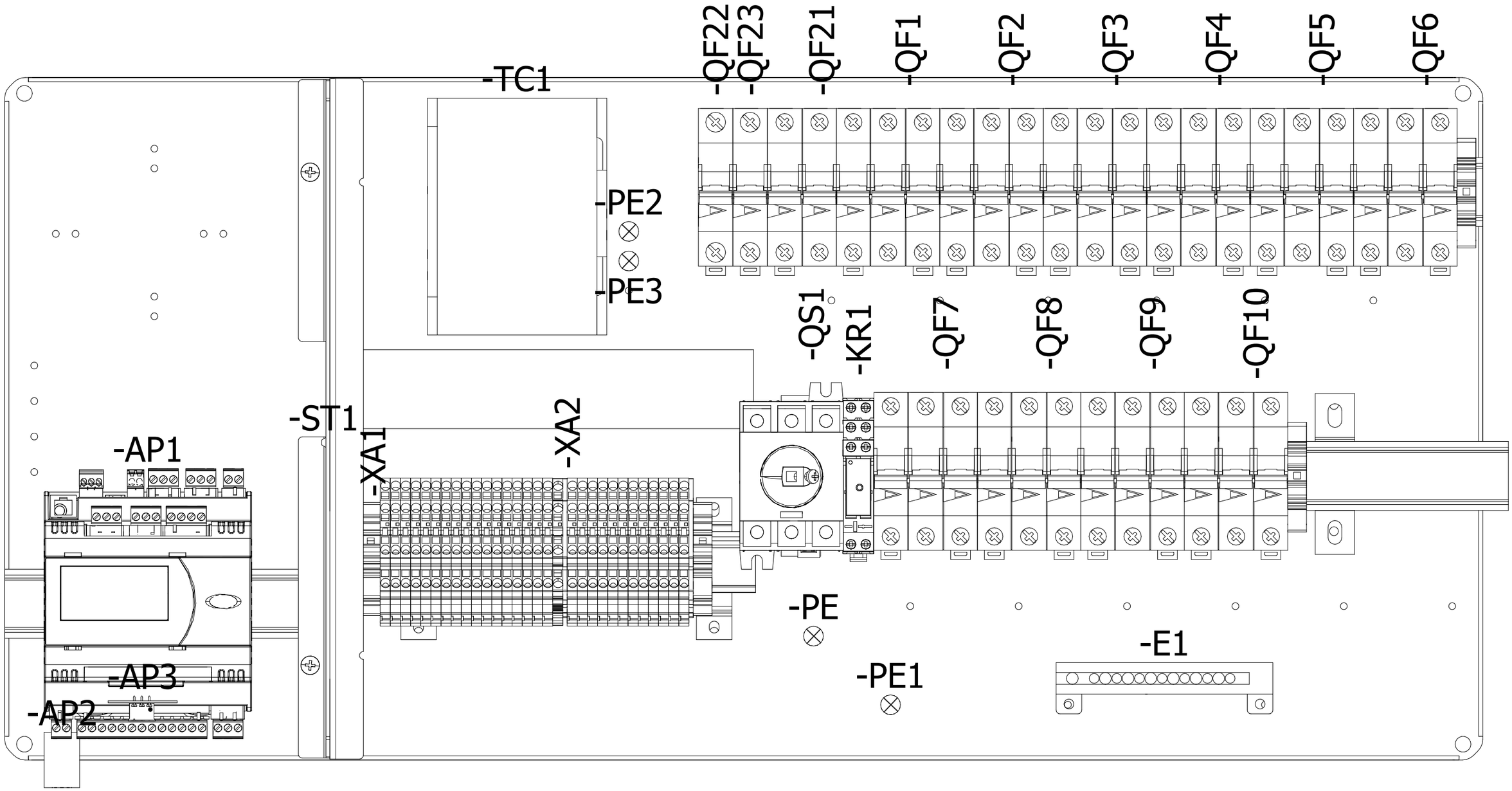

			Date	02/02/2015	CM00009386	ALFA LU-VE	Mounting plate view	Mounting locations +	Page /6
			Elab.	Franco Meneghetti	EP 10 FANS ALFA-LUVE				Next 7
								Function =	Total pages 35
Modification	Date	Name							

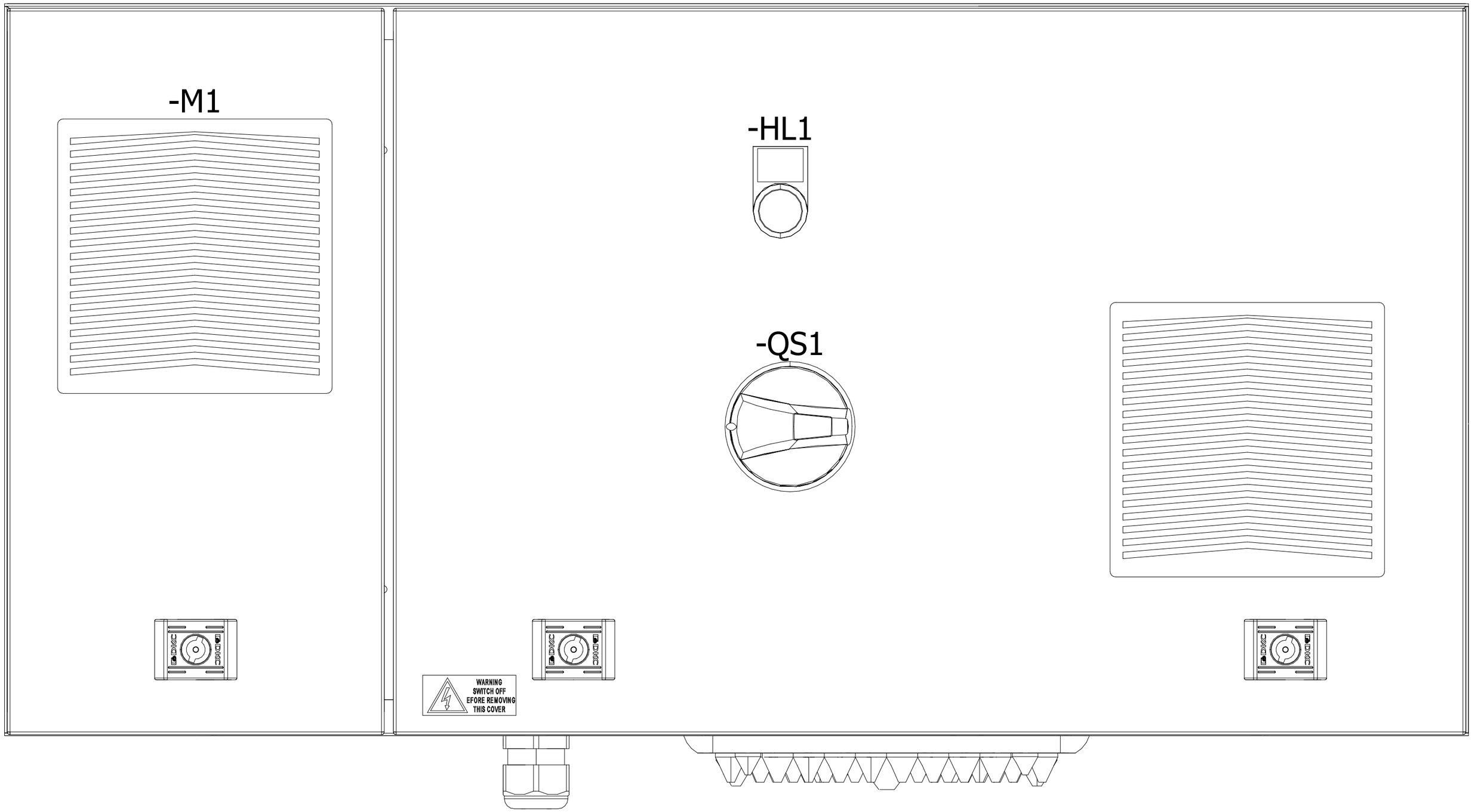

			Date	02/02/2015	CM00009386	ALFA LU-VE	Door view	Mounting locations +	Page /7
			Elab.	Franco Meneghetti	EP 10 FANS ALFA-LUVE				Next 8
								Function =	Total pages 35
Modification	Date	Name							

Layout guides and channels

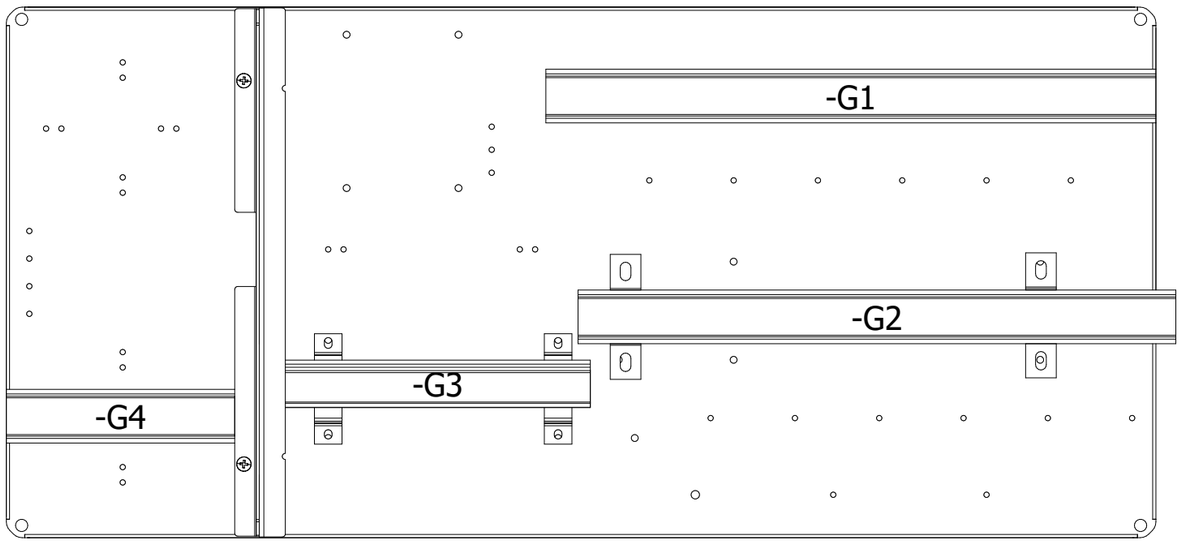

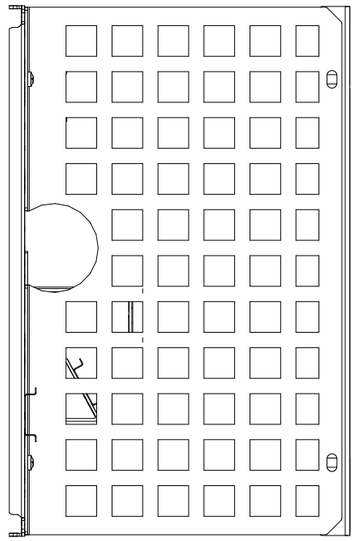

Sign	Type	Length (Tollerance -5mm)
U6	Inclined Bracket	
U7	Inclined Bracket	

G1	35x7.5	400 mm
G2	35x7.5	390 mm
G3	35x7.5	200 mm
G4	35x7.5	150 mm

U5	Support H=70mm	
U4	Support H=70mm	

U1	2cm Rise	
U2	2cm Rise	
U3	2cm Rise	

Empty

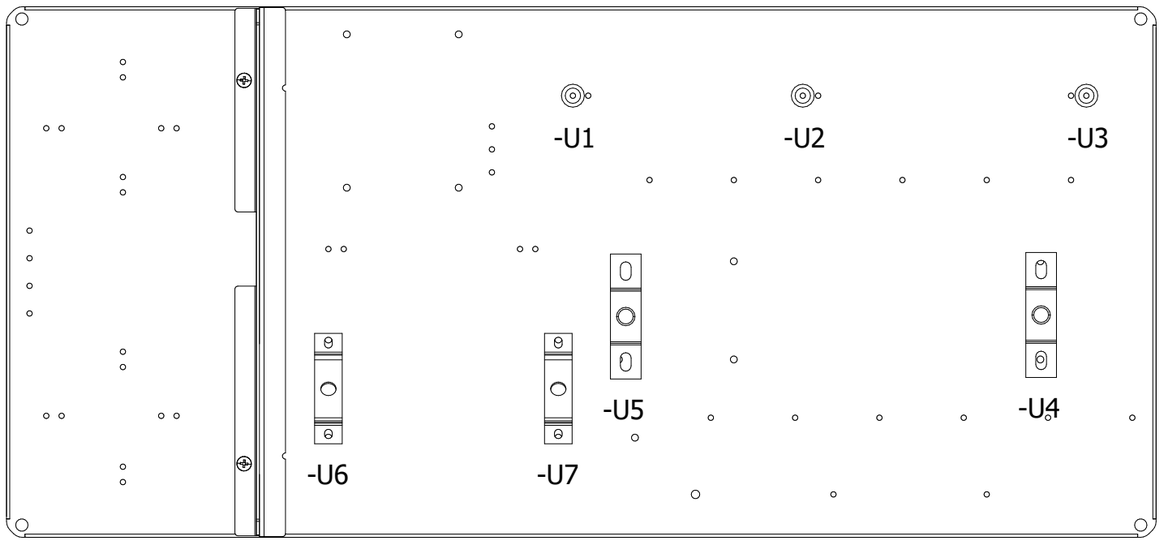

Empty

			Date	02/02/2015
			Elab.	Franco Meneghetti
Modification	Date	Name		

CM00009386

EP 10 FANS ALFA-LUVE

ALFA LU-VE

Guides view

Mounting locations +

Function =

Page /8

Next 9

Total pages 35

Layout guides and channels

Sign	Type	Length (Tollerance -5mm)
C1	40x60	205 mm

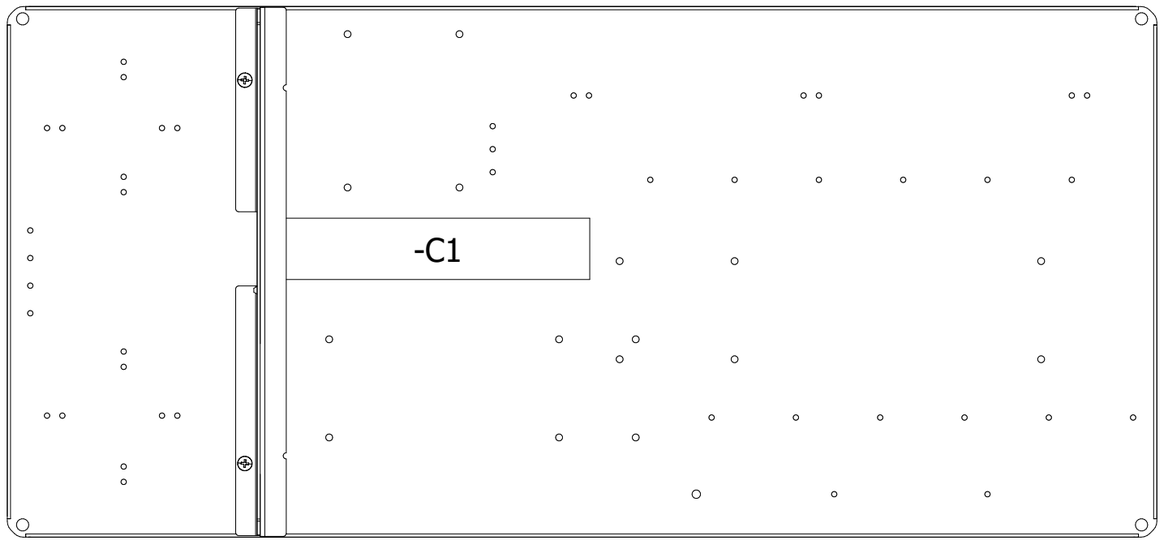

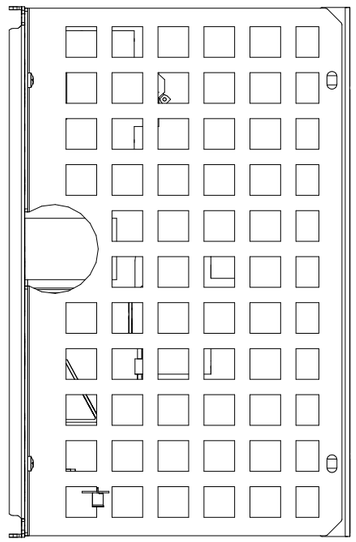

			Date	02/02/2015
			Elab.	Franco Meneghetti
Modification	Date	Name		

CM00009386

EP 10 FANS ALFA-LUVE

ALFA LU-VE

Channels view

Mounting locations +

Function =

Page /9

Next 10

Total pages 35

Cable entry/exit components

Item number	Component tipe	Drilling (Tollerance +-0.5mm)
1	M32 Gland	Ø 32.5mm
2	Multi-cable gland	

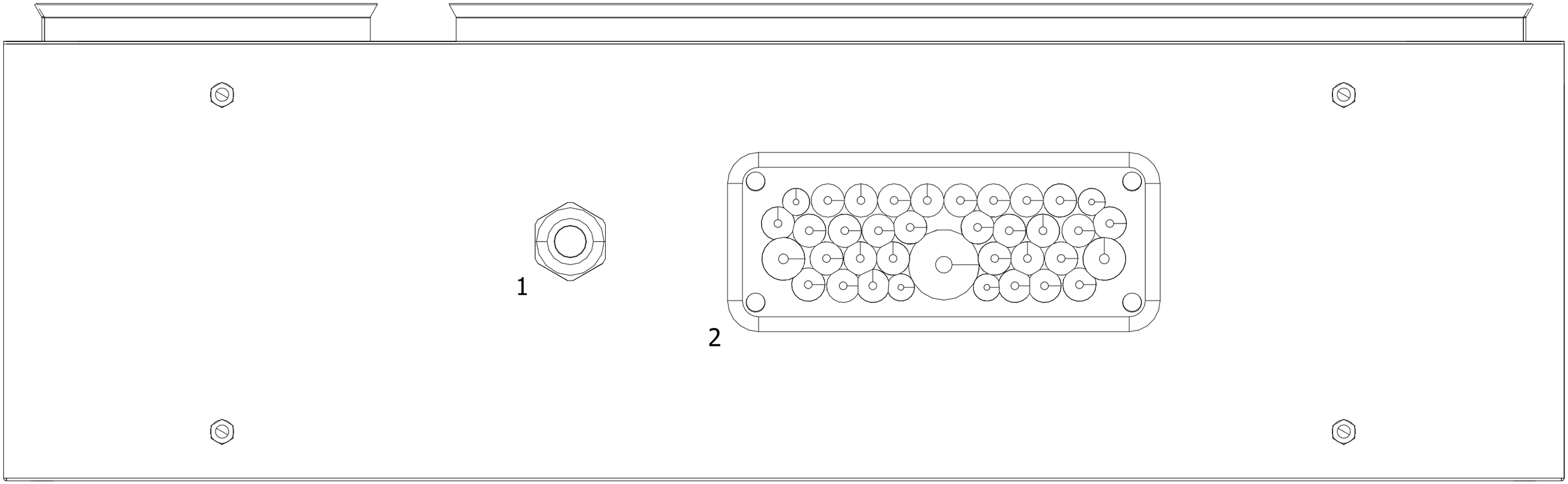

			Date	02/02/2015	CM00009386	ALFA LU-VE	Bottom view	Mounting locations +	Page /10
			Elab.	Franco Meneghetti	EP 10 FANS ALFA-LUVE				Next +QE/1
								Function =	Total pages 35
Modification	Date	Name							

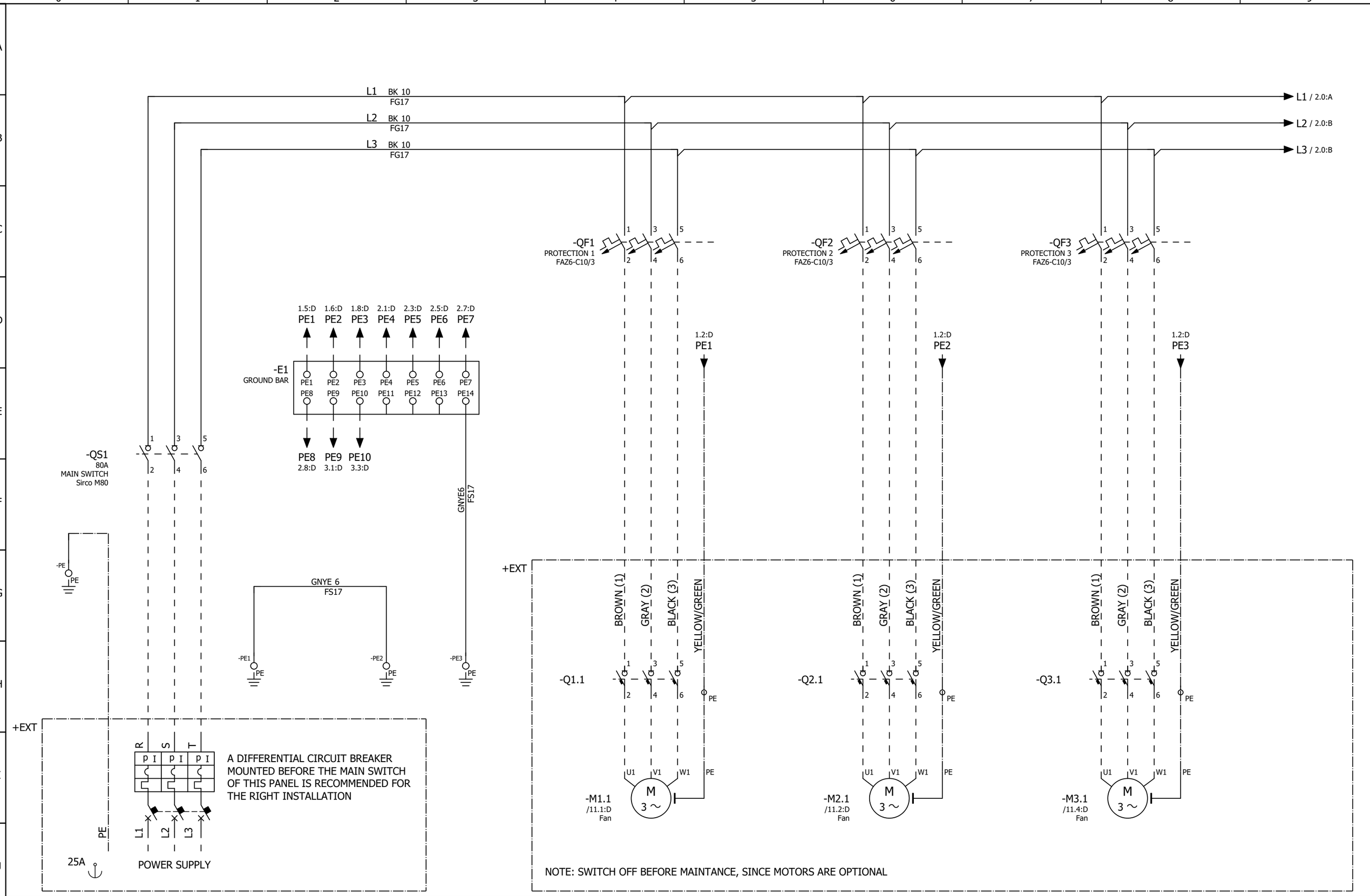

			Date	02/02/2015
			Elab.	Franco Meneghetti
Modification	Date	Name		

CM00009386

EP 10 FANS ALFA-LUVE

ALFA LU-VE

Power circuit

Mounting locations + QE

Function =

Page +QE/1

Next 2

Total pages 35

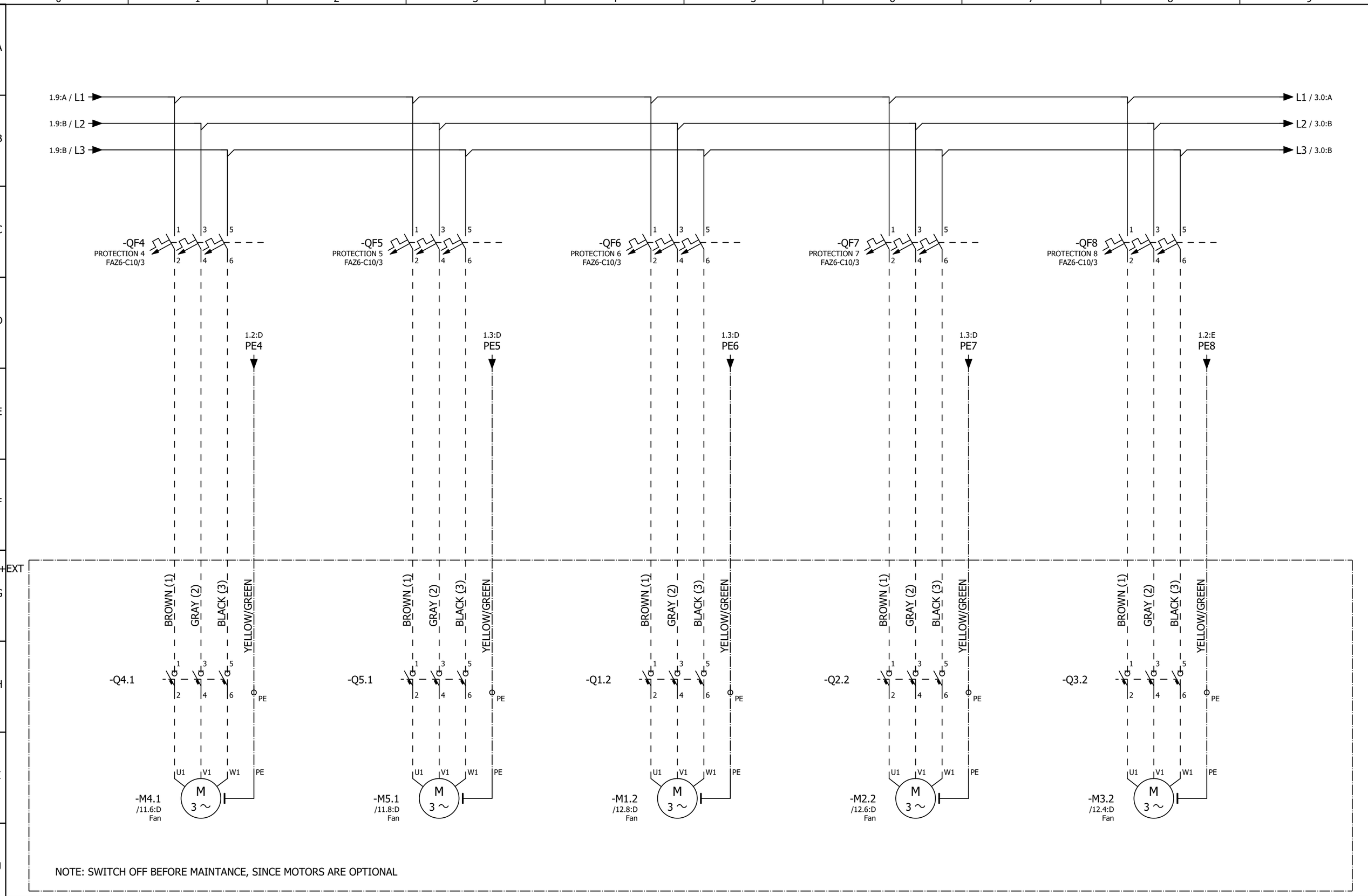

			Date	02/02/2015	CM00009386	ALFA LU-VE	Power circuit	Mounting locations + QE	Page +QE/2
			Elab.	Franco Meneghetti	EP 10 FANS ALFA-LUVE				Next 3
Modification	Date	Name						Function =	Total pages 35

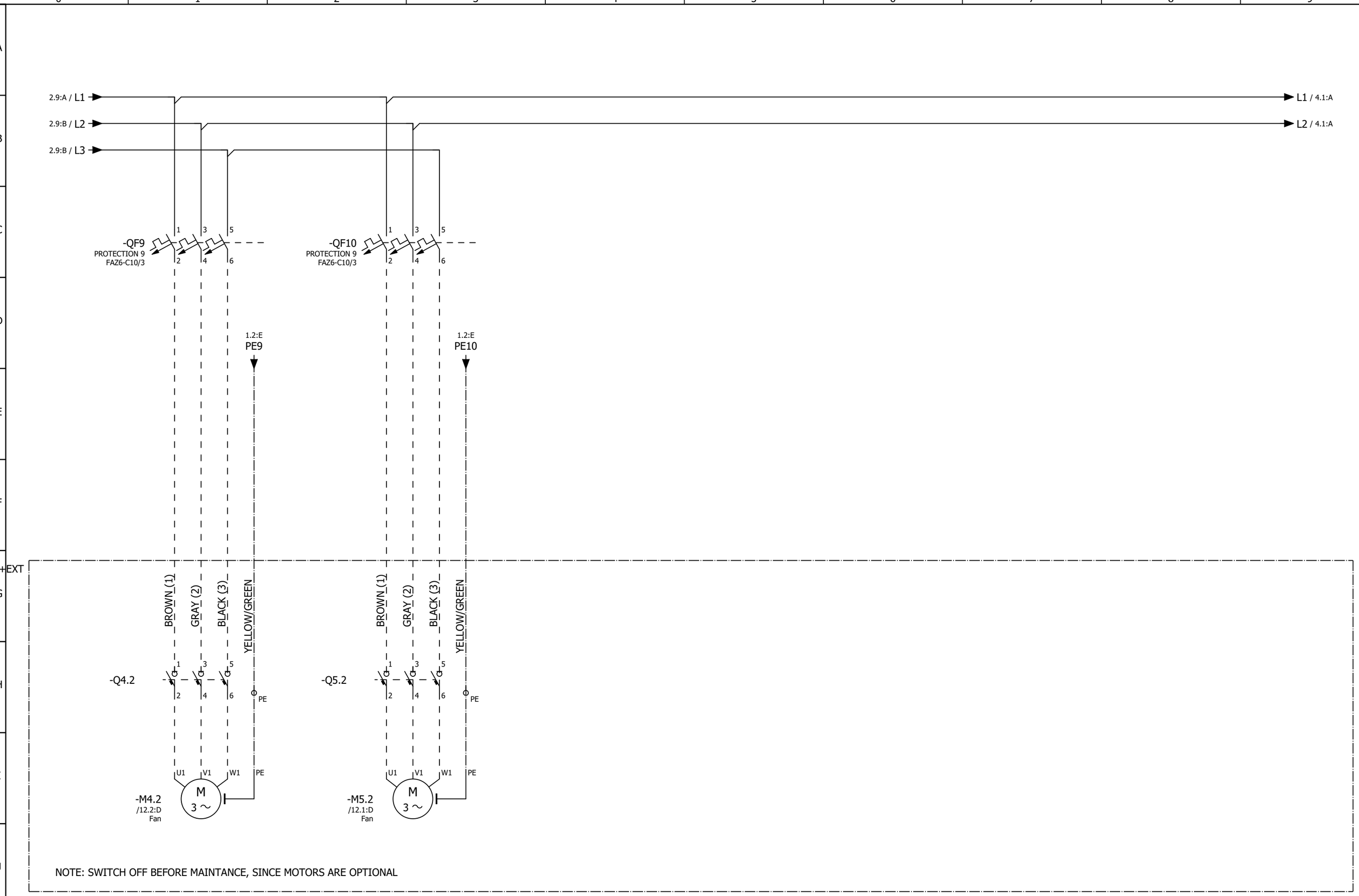

			Date	02/02/2015
			Elab.	Franco Meneghetti
Modification	Date	Name		

CM00009386

EP 10 FANS ALFA-LUVE

ALFA LU-VE

Power circuit

Mounting locations + QE

Function =

Page +QE/3

Next 4

Total pages 35

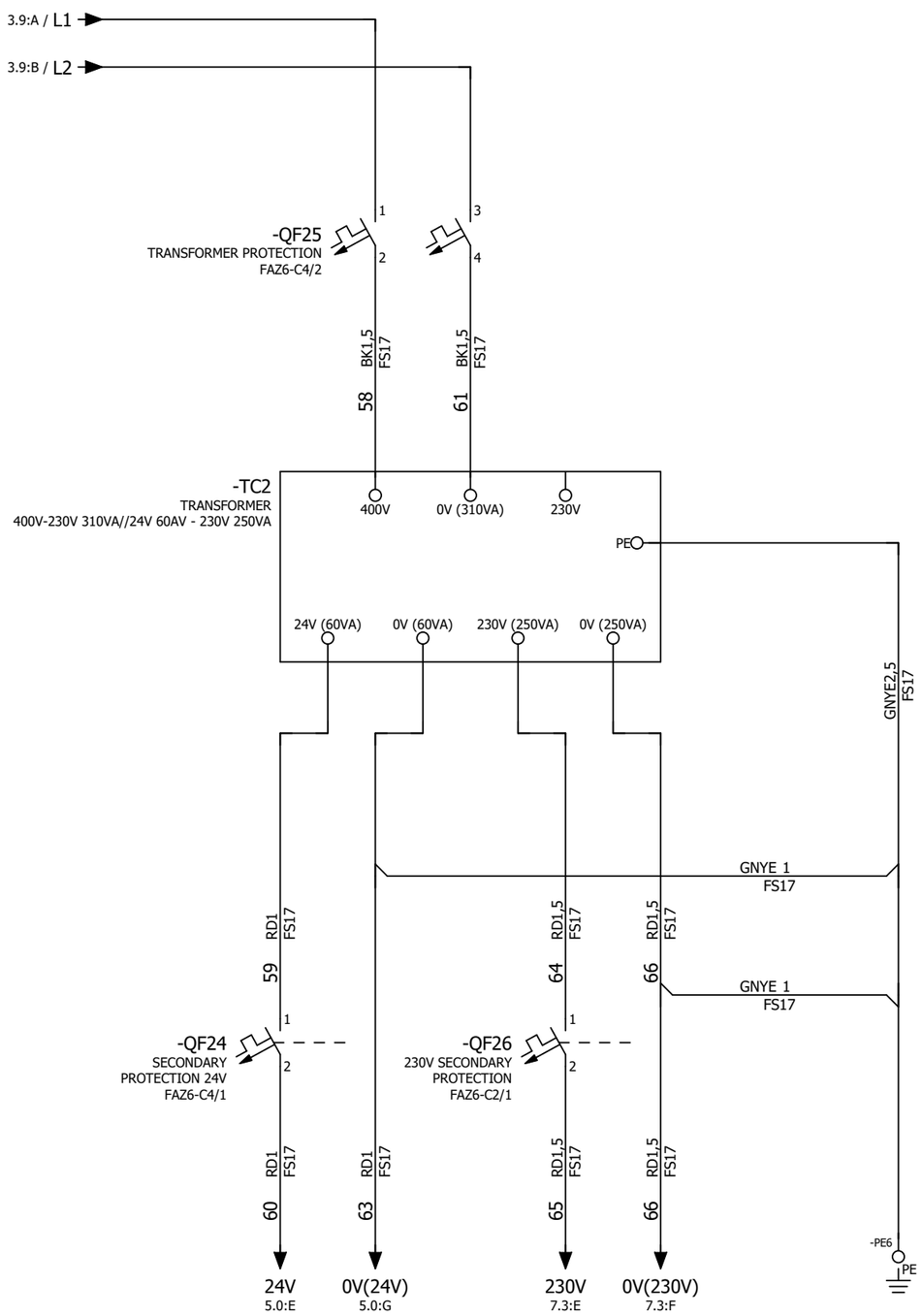

			Date	02/02/2015	CM00009386	ALFA LU-VE	Power circuit	Mounting locations + QE	Page +QE/4
			Elab.	Franco Meneghetti	EP 10 FANS ALFA-LUVE			Function =	Next 5
Modification	Date	Name							Total pages 35

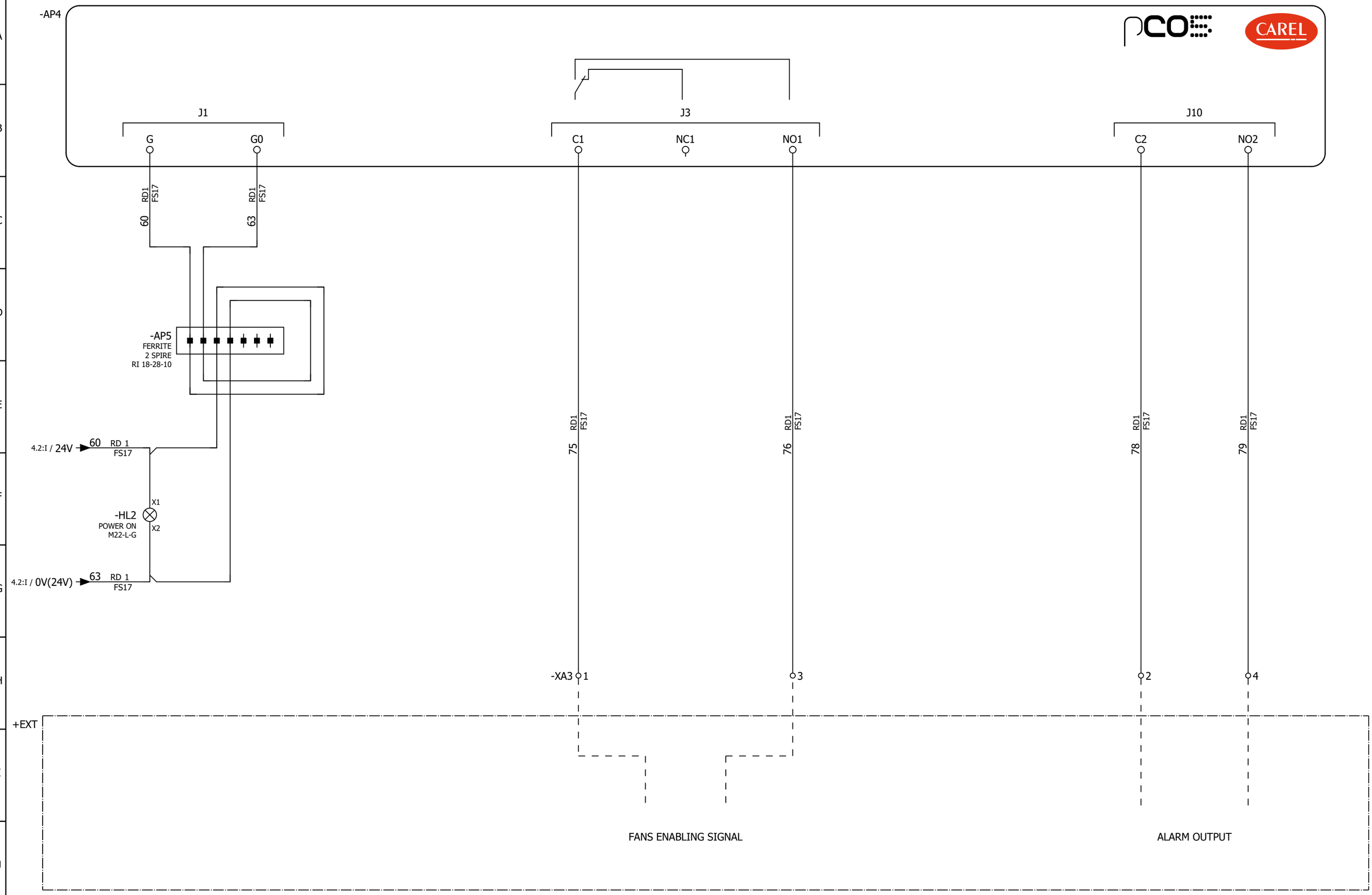

			Date	02/02/2015	CM00009386	Auxiliary circuit	Page +QE/5
			Elab.	Franco Meneghetti	EP 10 FANS ALFA-LUVE	Mounting locations + QE	Next 6
Modification	Date	Name				Function =	Total pages 35

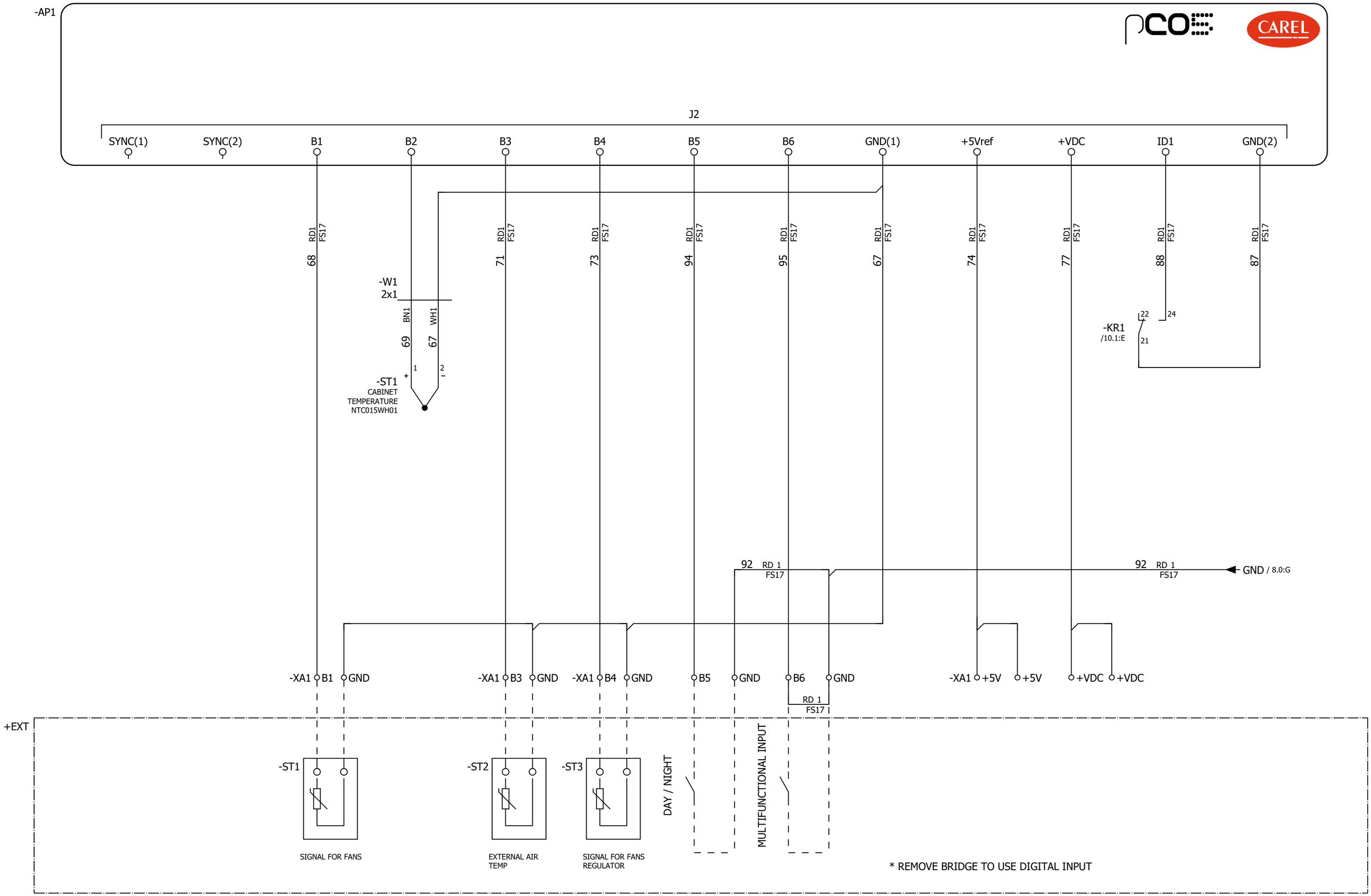

			Date	02/02/2015
			Elab.	Franco Meneghetti
Modification	Date	Name		

CM00009386

EP 10 FANS ALFA-LUVE

Auxiliary circuit

Mounting locations + QE

Function =

Page +QE/6

Next 6.a

Total pages 35

NO PT1000
B1 SIGNAL FOR FANS (NTC)
B2 E.P. TEMPERATURE (NTC)
B3 EXTERNAL AIR TEMPERATURE (NTC)
B4 ----------

WITH PT1000
B1 ----------
B2 E.P. TEMPERATURE (NTC)
B3 EXTERNAL AIR TEMPERATURE (NTC)
B4 SIGNAL FOR FANS (PT1000)

PROBE CONNECTIONS

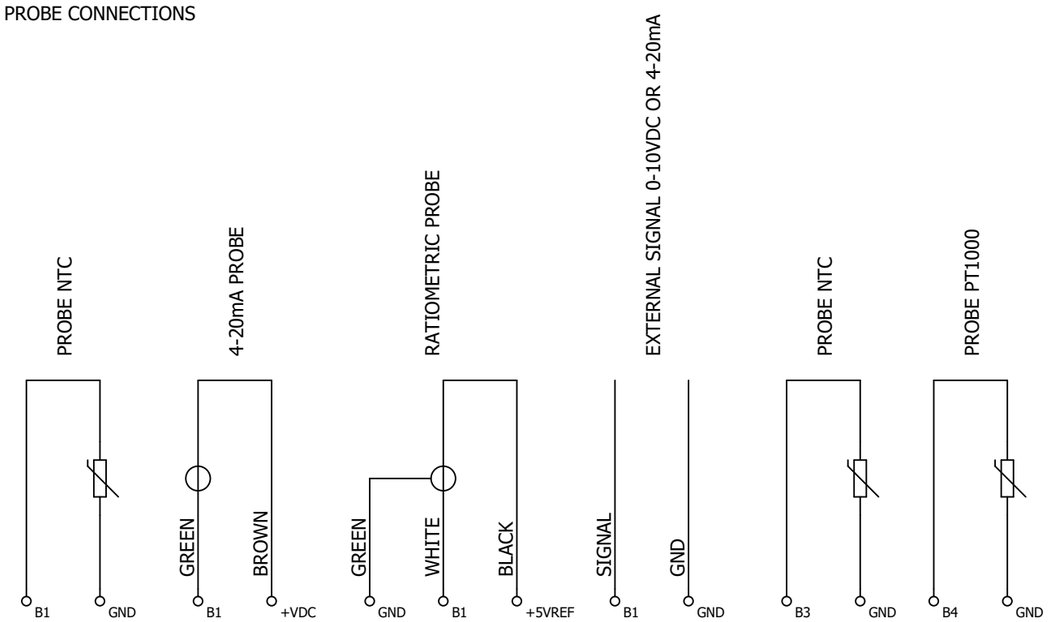

			Date	02/02/2015
			Elab.	Franco Meneghetti
Modification	Date	Name		

CM00009386

EP 10 FANS ALFA-LUVE

ALFA LU-VE

Auxiliary circuit

Mounting locations + QE

Function =

Page +QE/6.a

Next 7

Total pages 35

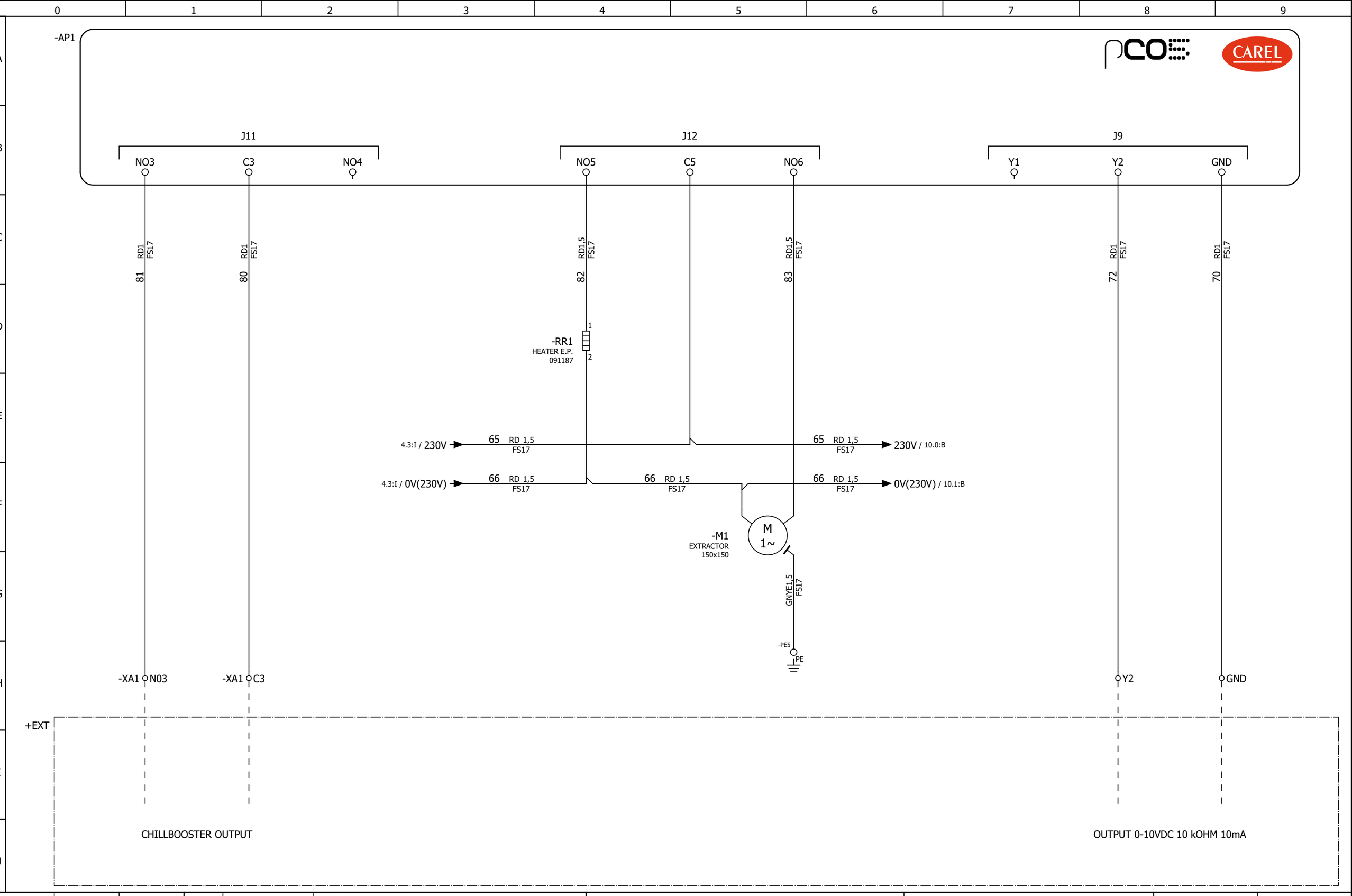

			Date	02/02/2015	CM00009386	ALFA LU-VE	Auxiliary circuit	Mounting locations + QE	Page +QE/7
			Elab.	Franco Meneghetti	EP 10 FANS ALFA-LUVE				Next 8
								Function =	Total pages 35
Modification	Date	Name							

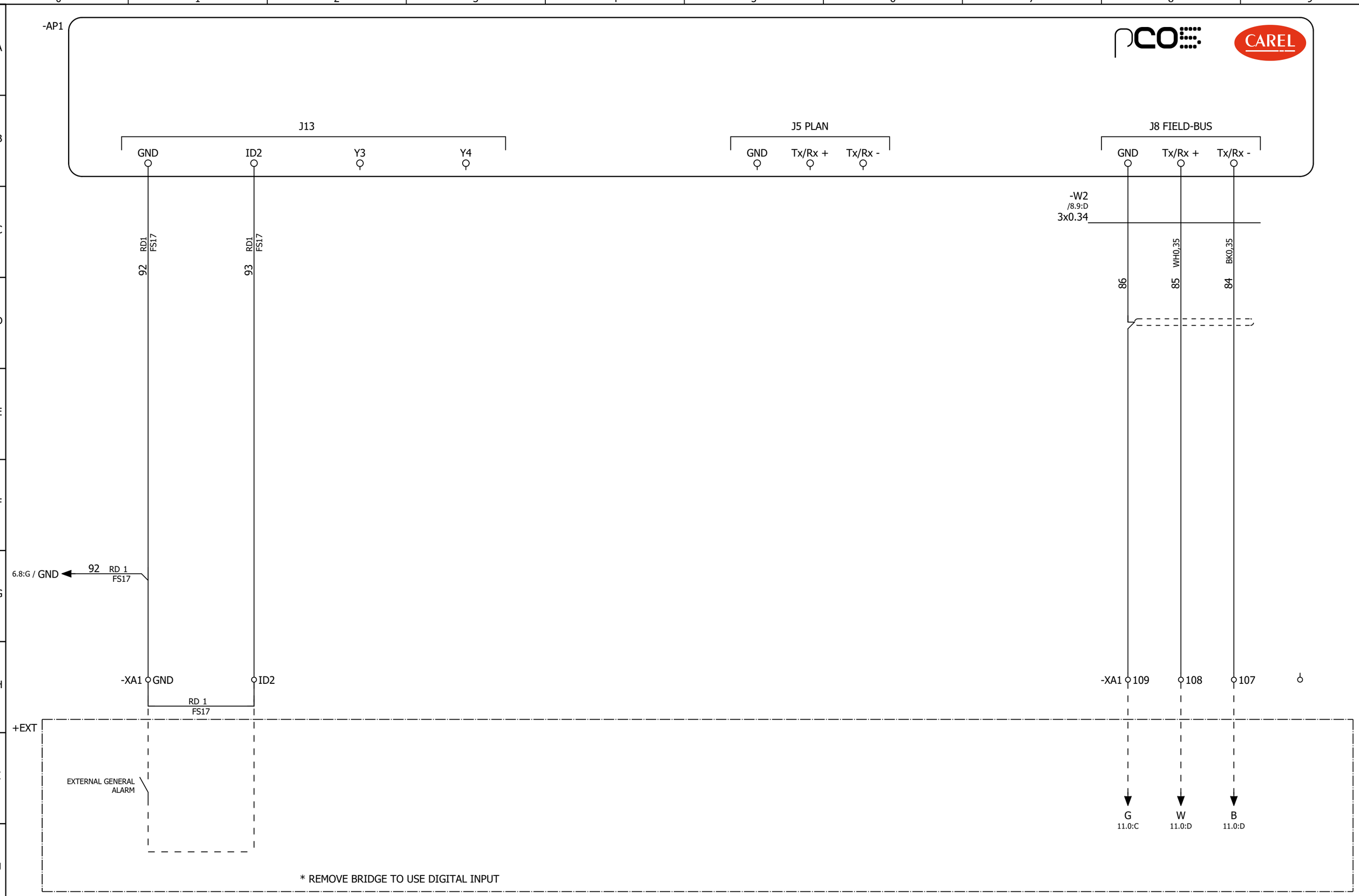

			Date	02/02/2015
			Elab.	Franco Meneghetti
Modification	Date	Name		

CM00009386

EP 10 FANS ALFA-LUVE

Auxiliary circuit

Mounting locations + QE

Function =

Page +QE/8

Next 9

Total pages 35

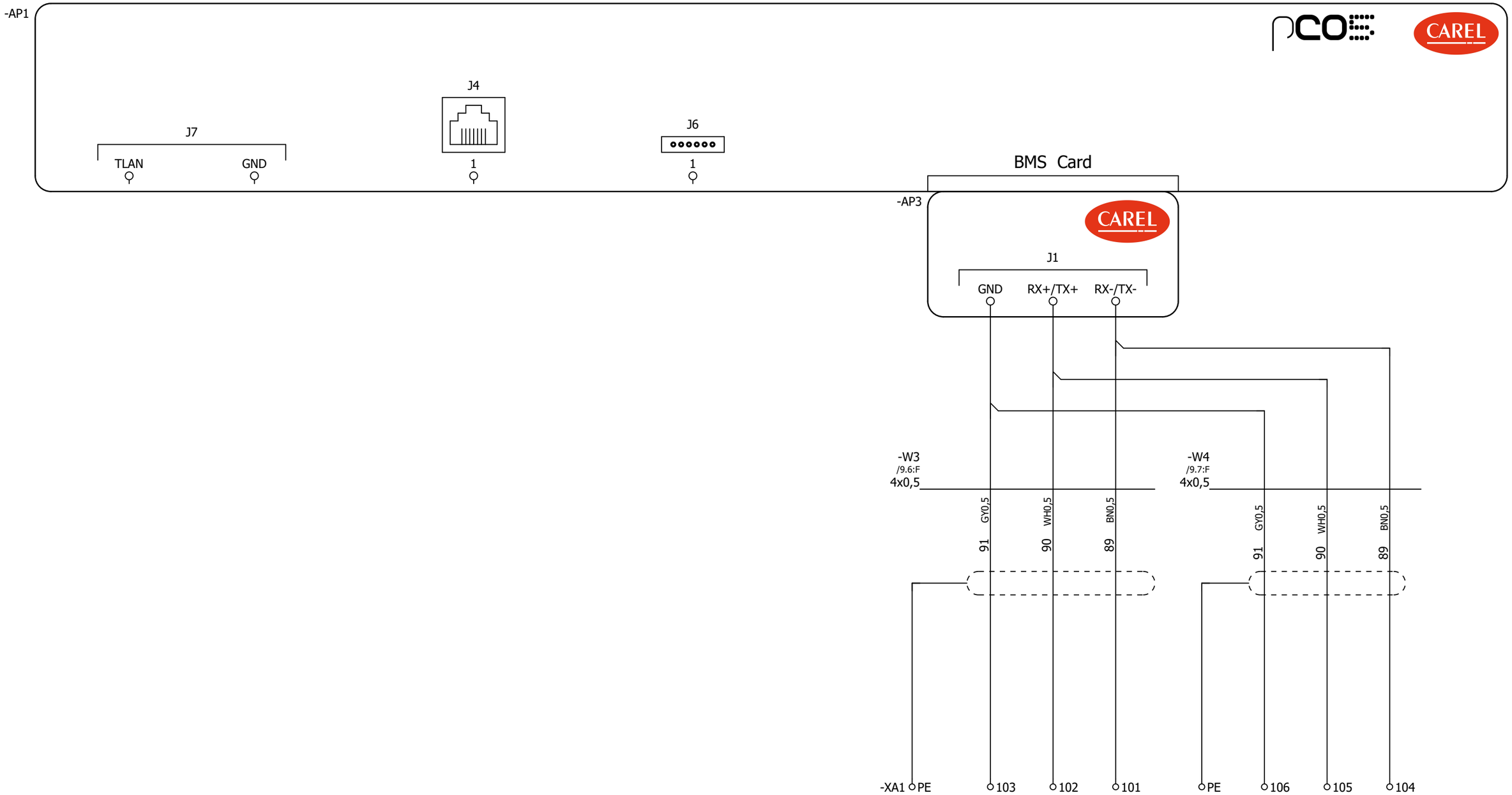

+EXT

			Date	02/02/2015	CM00009386	ALFA LU-VE	Auxiliary circuit	Mounting locations + QE	Page +QE/9
			Elab.	Franco Meneghetti	EP 10 FANS ALFA-LUVE			Function =	Next 10
									Total pages 35
Modification	Date	Name							

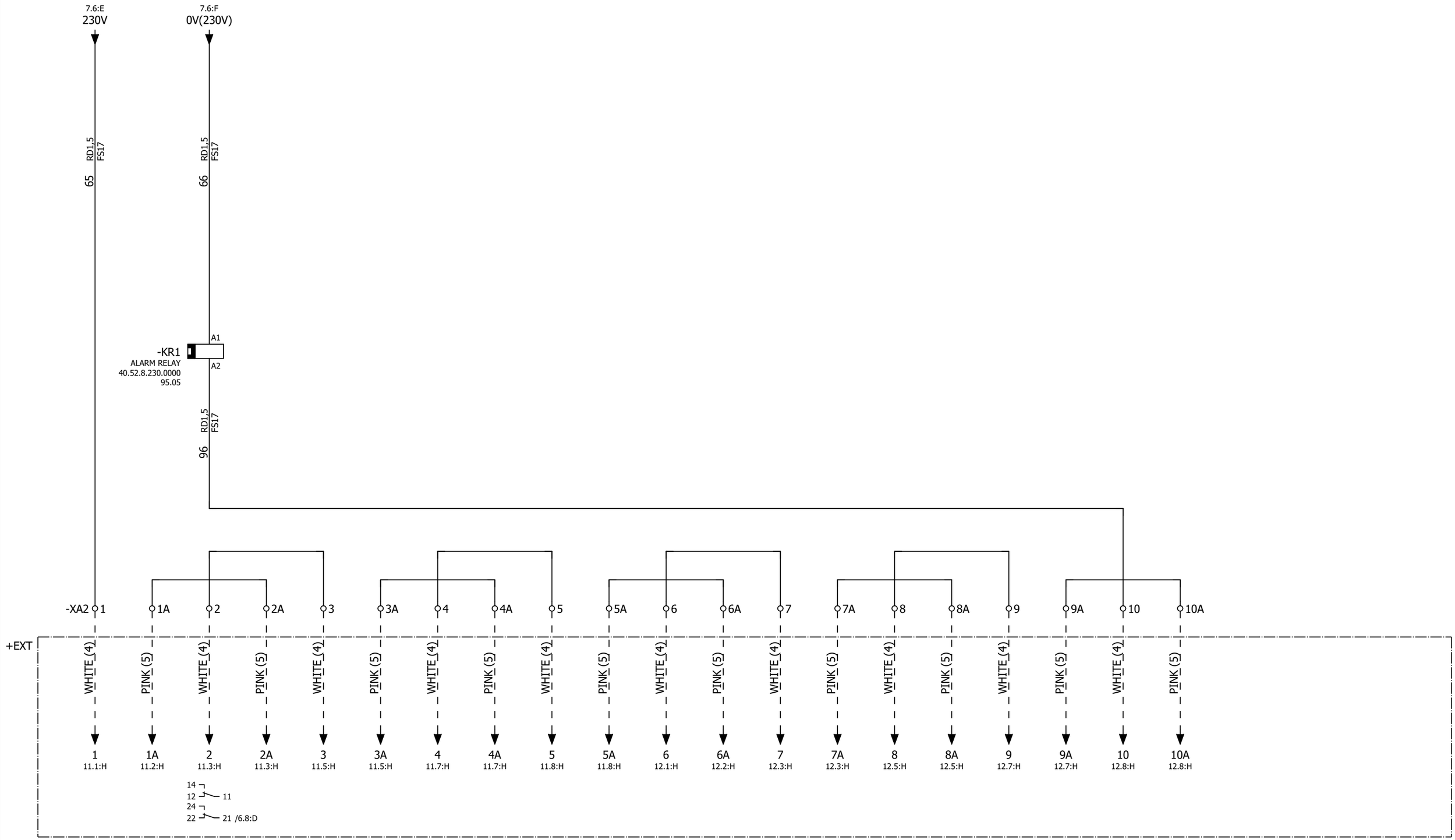

			Date	02/02/2015	CM00009386	ALFA LU-VE	Auxiliary circuit	Mounting locations + QE	Page +QE/10
			Elab.	Franco Meneghetti	EP 10 FANS ALFA-LUVE			Function =	Next 11
Modification	Date	Name							Total pages 35

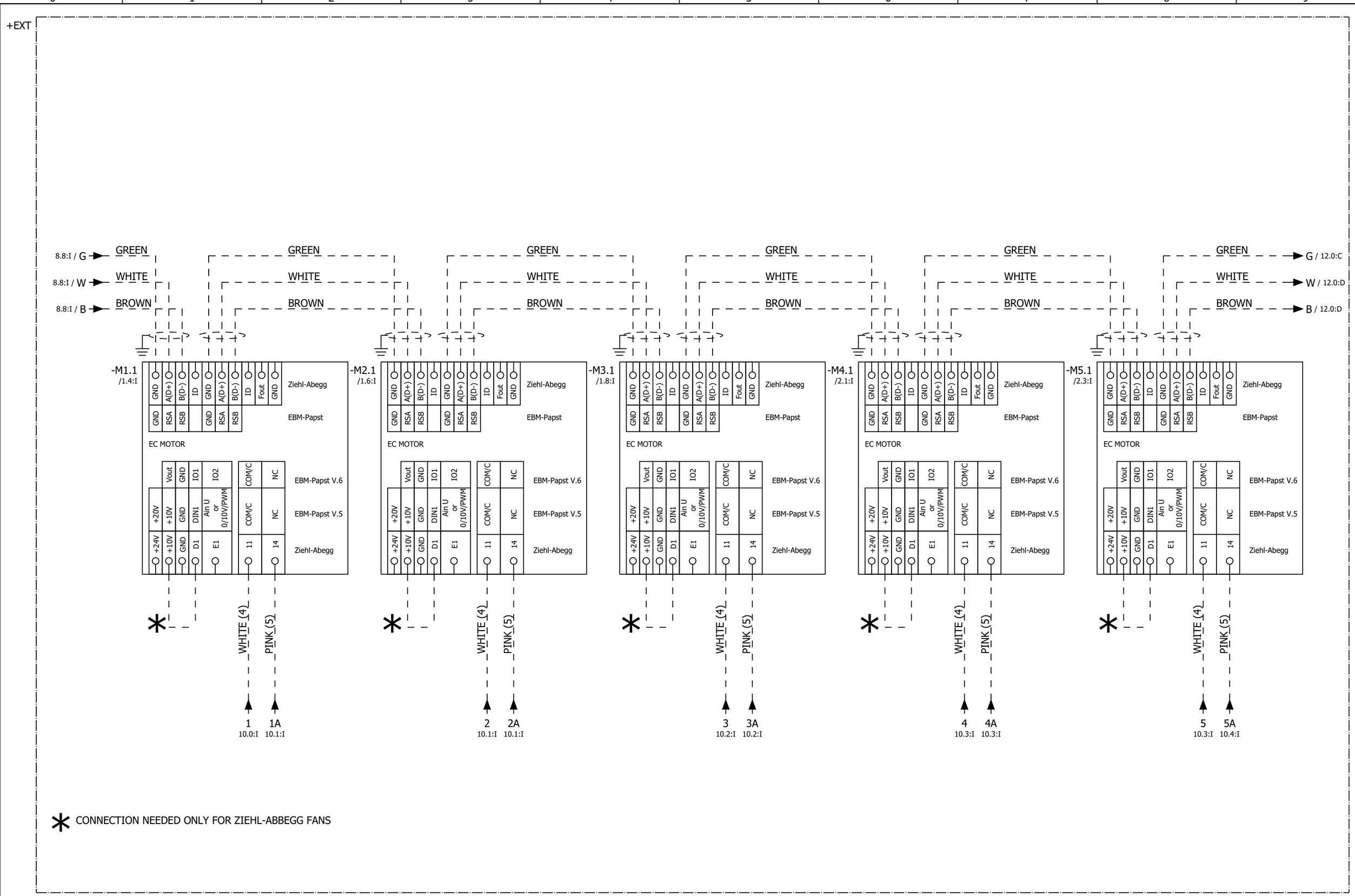

			Date	02/02/2015
			Elab.	Franco Meneghetti
Modification	Date	Name		

CM00009386

EP 10 FANS ALFA-LUVE

ALFA LU-VE

Auxiliary circuit

Mounting locations + QE

Function =

Page +QE/11

Next 12

Total pages 35

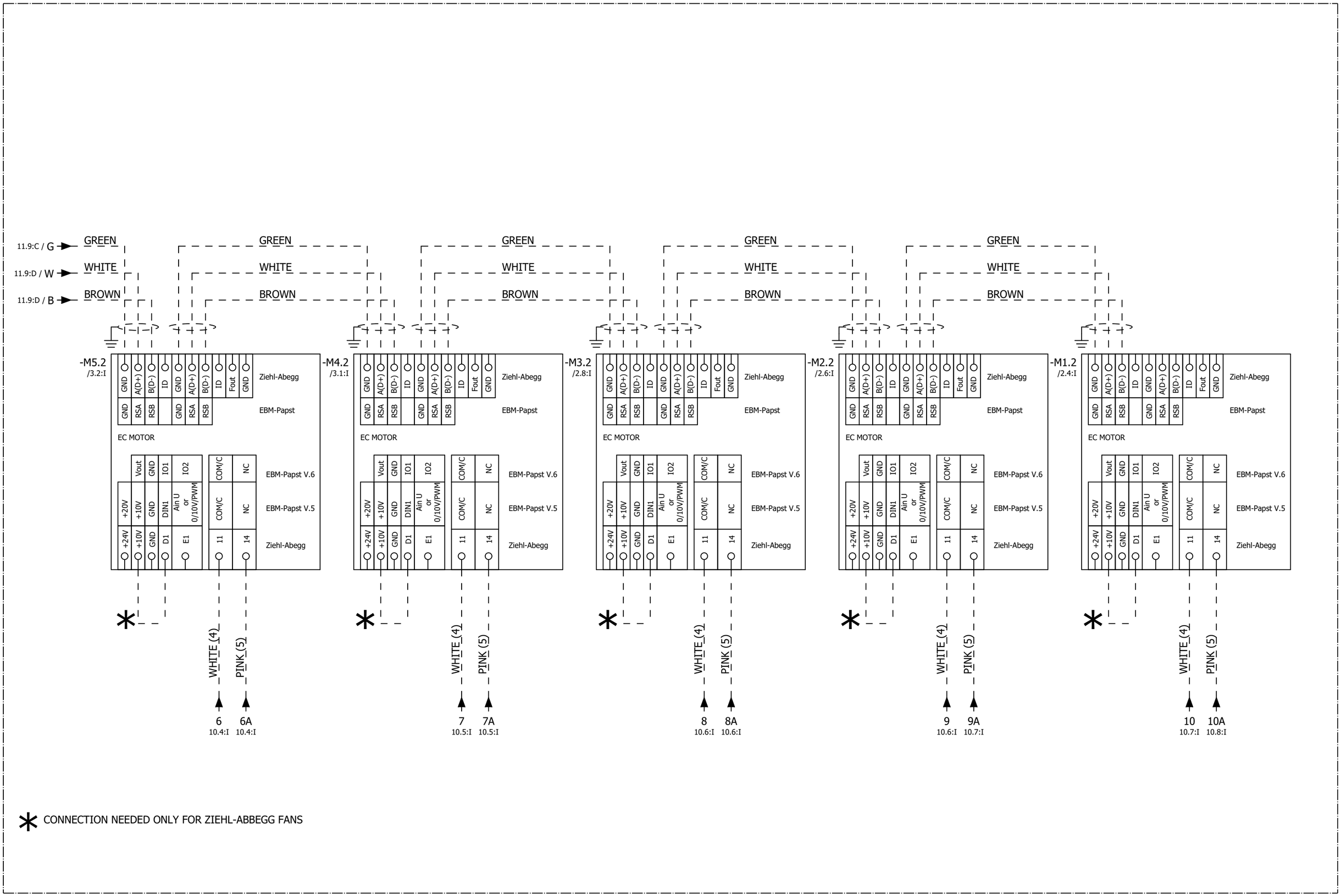

			Date	02/02/2015
			Elab.	Franco Meneghetti
Modification	Date	Name		

CM00009386

EP 10 FANS ALFA-LUVE

ALFA LU-VE

Auxiliary circuit

Mounting locations + QE

Function =

Page +QE/12

Next 13

Total pages 35

10 FAN MOTORS

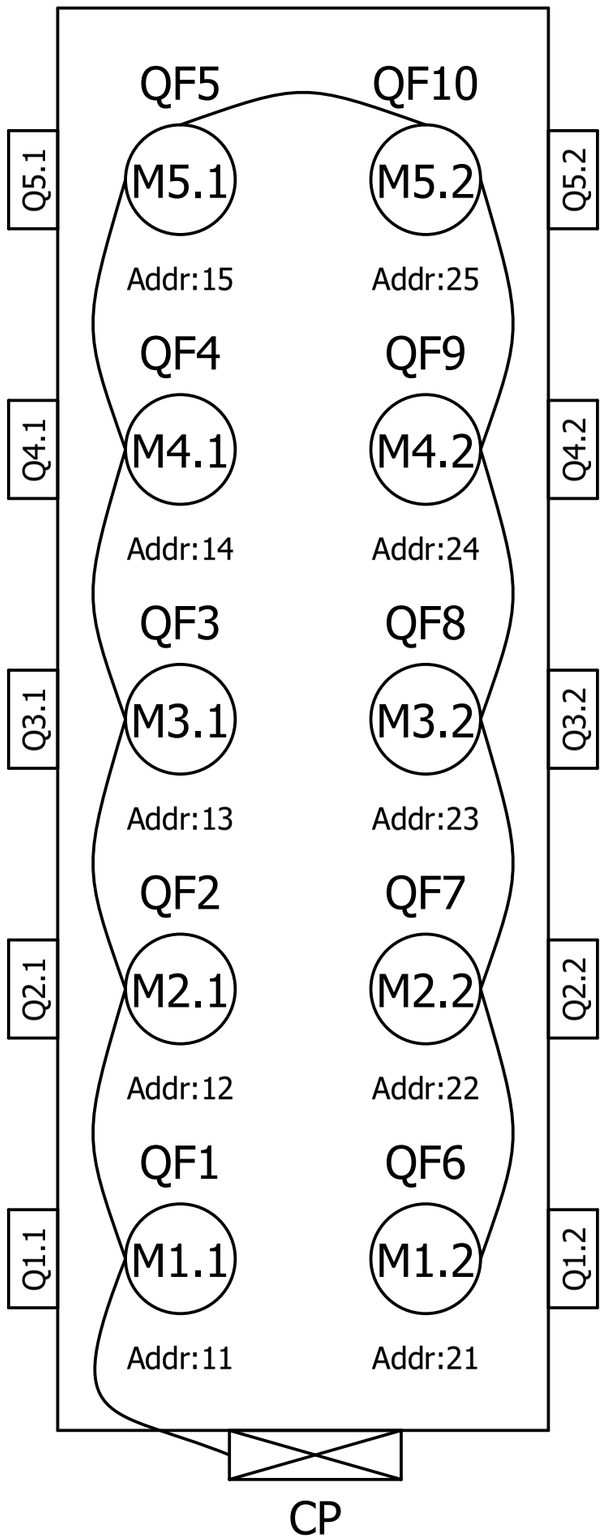

Page	+QE/13		
Next	14		
Total pages	35		
Mounting locations	+ QE		
Function	=		

Serial connection

ALFA LU-VE

CM00009386

EP 10 FANS ALFA-LUVE

Date	02/02/2015	
Elab.	Franco Meneghetti	
Name		
Date		
Modification		

CAREL INDUSTRIES S.p.A. - Società Unipersonale
Via dell'Industria, 11 - 35020 Brugine – Padova – Italia
Tel. (+39) 049.9716611 – Fax (+39) 049.9716600
www.carel.com – e-mail: carel@carel.com

Cap. Soc. € 10.000.000 i.v.
C.C.I.A.A. Padova Reg. Imp n. 4359090281
Part. IVA e Cod. Fisc. 04359090281
Società soggetta ad attività di direzione e coordinamento di Carel S.p.A.

CE

EU Declaration of Conformity

Manufacturer: **CAREL Industries S.p.A.**
Via dell'Industria, 11 35020 Brugine (PD) Italy

Electric Control Panels series Carel Power Solutions
Code :
Serial number:

CM00009386 / CM00009565

The manufacturer declares that all the above indicated products are in accordance with the EU Directives:

2006/95/EC (LVD)

and comply with the requirements of the following European standards:

EN 60204-1

Brugine, 01/09/2015

CAREL INDUSTRIES S.p.A.
Technical Director

Ing. Umberto Bianchini

Modification	Date	Name		Date	02/02/2015	CM00009386
			Elab.	Franco Meneghetti		EP 10 FANS ALFA-LUVE

ALFA LU-VE

Certificazione

Function	=	Mounting locations	+ QE	Page	+QE/14
Total pages	35	Next	=REP1+/1,0		

Multicore cables scheme

Carel STD-V2

Cable type PROBE CABLE

Oracle code PROBE CABLE

Total Cable Length Cut:

Departure | Cross ref. | Terminator

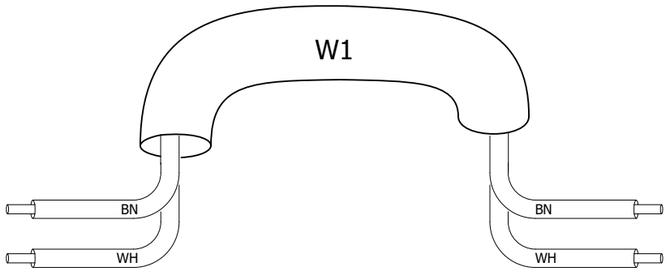

Terminator | Cross ref. | Arrival

Unsheathing cable departure

Unsheathing cable arrival

			Date	02/02/2015
			Elab.	Franco Meneghetti
Modification	Date	Name		

CM00009386

EP 10 FANS ALFA-LUVE

ALFA LU-VE

Multicore cables scheme

Mounting locations +

Function =REP1

Page =REP1/1,0

Next 1,1

Total pages 35

Multicore cables scheme

Cable type Belden

Oracle code 1008176AXX

Total Cable Length Cut:

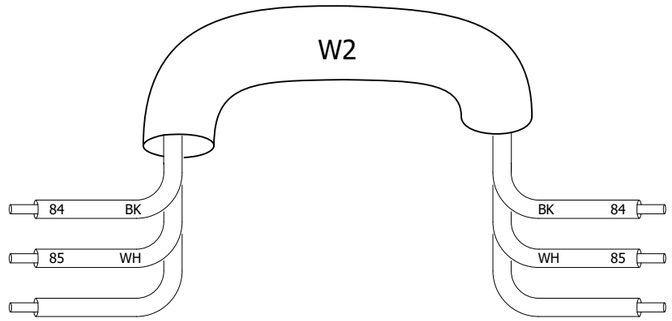

Departure	Cross ref.	Terminator	Terminator	Cross ref.	Arrival
XA1:107:A	+QE/8.8:H			+QE/8.8:B	+QE-AP1:J8 FIELD-BUS:Tx/Rx -
XA1:108:B	+QE/8.8:H			+QE/8.8:B	+QE-AP1:J8 FIELD-BUS:Tx/Rx +

Unsheathing cable departure

Unsheathing cable arrival

			Date	02/02/2015
			Elab.	Franco Meneghetti
Modification	Date	Name		

CM00009386

EP 10 FANS ALFA-LUVE

ALFA LU-VE

Multicore cables scheme

Mounting locations +

Function =REP1

Page =REP1/1,1

Next 1,2

Total pages 35

Multicore cables scheme

Carel STD-V2

Cable type Shielded 3x0.5

Oracle code 1008019AXX

Total Cable Length Cut:

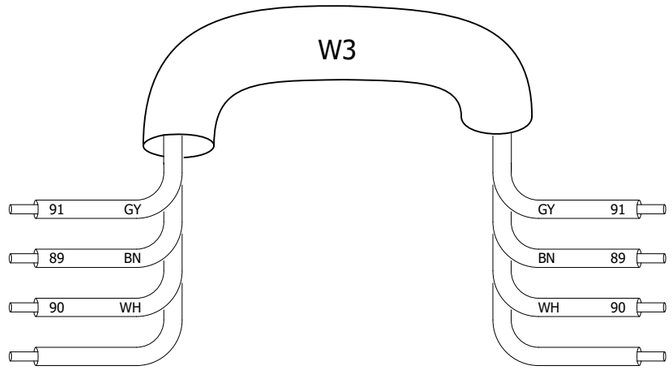

Departure	Cross ref.	Terminator	Terminator	Cross ref.	Arrival
XA1:103:A	+QE/9.6:H			+QE/9.6:C	+QE-AP3:J1:GND
XA1:101:A	+QE/9.7:H			+QE/9.7:C	+QE-AP3:J1:RX-/TX-
XA1:102:B	+QE/9.6:H			+QE/9.6:C	+QE-AP3:J1:RX+/TX+
XA1:PE:B	+QE/9.5:H			+QE/9.5:E	W3

Unsheathing cable departure

Unsheathing cable arrival

			Date	02/02/2015	CM00009386	ALFA LU-VE	Multicore cables scheme	Mounting locations +	Page =REP1/1,2
			Elab.	Franco Meneghetti	EP 10 FANS ALFA-LUVE				Next 1,3
								Function =REP1	Total pages 35
Modification	Date	Name							

Multicore cables scheme

Carel STD-V2

Cable type Shielded 3x0.5

Oracle code 1008019AXX

Total Cable Length Cut:

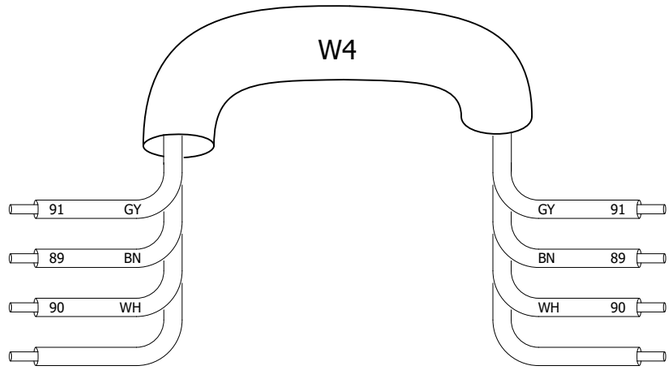

Departure	Cross ref.	Terminator	Terminator	Cross ref.	Arrival
XA1:106:B	+QE/9.8:H			+QE/9.6:C	+QE-AP3:J1:GND
XA1:104:B	+QE/9.8:H			+QE/9.7:C	+QE-AP3:J1:RX-/TX-
XA1:105:A	+QE/9.8:H			+QE/9.6:C	+QE-AP3:J1:RX+/TX+
XA1:PE:A	+QE/9.7:H			+QE/9.7:E	W4

Unsheathing cable departure

Unsheathing cable arrival

			Date	02/02/2015	CM00009386	ALFA LU-VE	Multicore cables scheme	Mounting locations +	Page =REP1/1,3
			Elab.	Franco Meneghetti	EP 10 FANS ALFA-LUVE				Next 2,0
								Function =REP1	Total pages 35
Modification	Date	Name							

Terminal diagram

Terminal strip

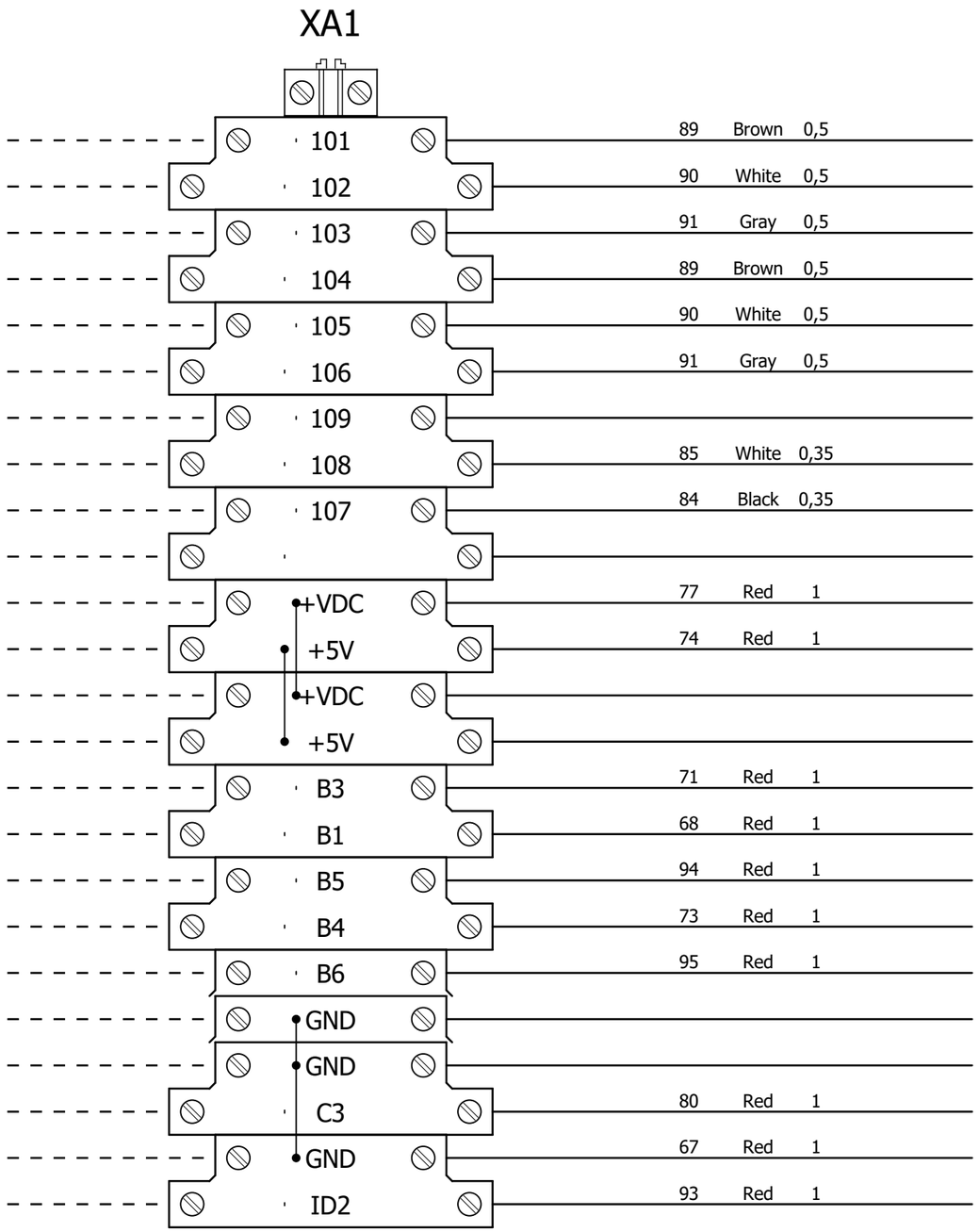

External targets	Teminal type	Terminal position on the drawings
	STTB 2,5	+QE/9.7:H
		+QE/9.6:H
	STTB 2,5	+QE/9.6:H
		+QE/9.8:H
	STTB 2,5	+QE/9.8:H
		+QE/9.8:H
	STTB 2,5	+QE/8.8:H
		+QE/8.8:H
	STTB 2,5	+QE/8.8:H
		+QE/8.9:H
	STTB 2,5	+QE/6.7:H
		+QE/6.7:H
	STTB 2,5	+QE/6.8:H
		+QE/6.7:H
	STTB 2,5	+QE/6.3:H
		+QE/6.2:H
	STTB 2,5	+QE/6.5:H
		+QE/6.4:H
	STTB 2,5	+QE/6.5:H
	STTB 2,5	+QE/6.2:H
	STTB 2,5	+QE/6.3:H
		+QE/7.1:H
	STTB 2,5	+QE/6.4:H
		+QE/8.1:H

Terminal diagram

Terminal strip

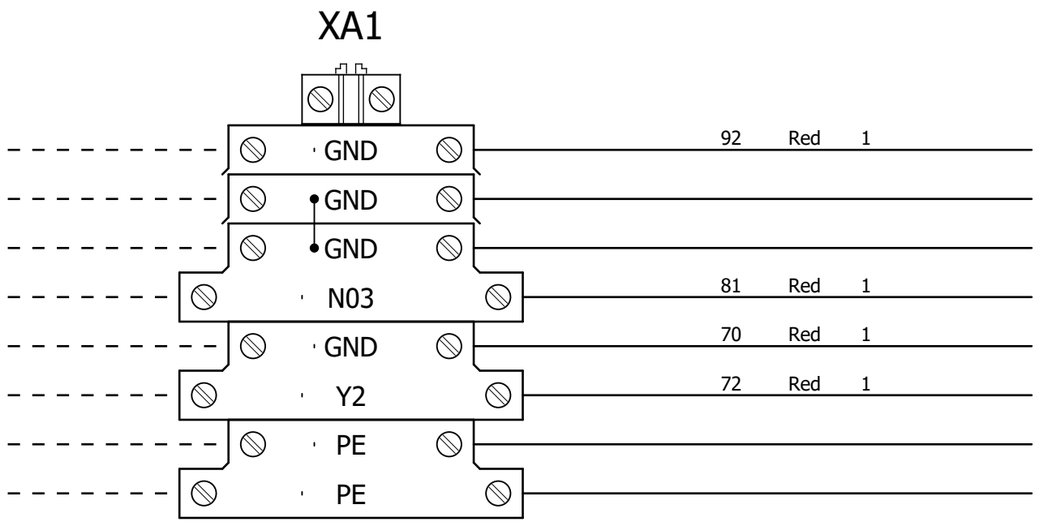

External targets	Teminal type	Terminal position on the drawings
	STTB 2,5	+QE/8.1:H
	STTB 2,5	+QE/6.5:H
	STTB 2,5	+QE/6.6:H
		+QE/7.1:H
	STTB 2,5	+QE/7.9:H
		+QE/7.8:H
	STTB 2,5-PE	+QE/9.7:H
		+QE/9.5:H

Terminal diagram

Terminal strip

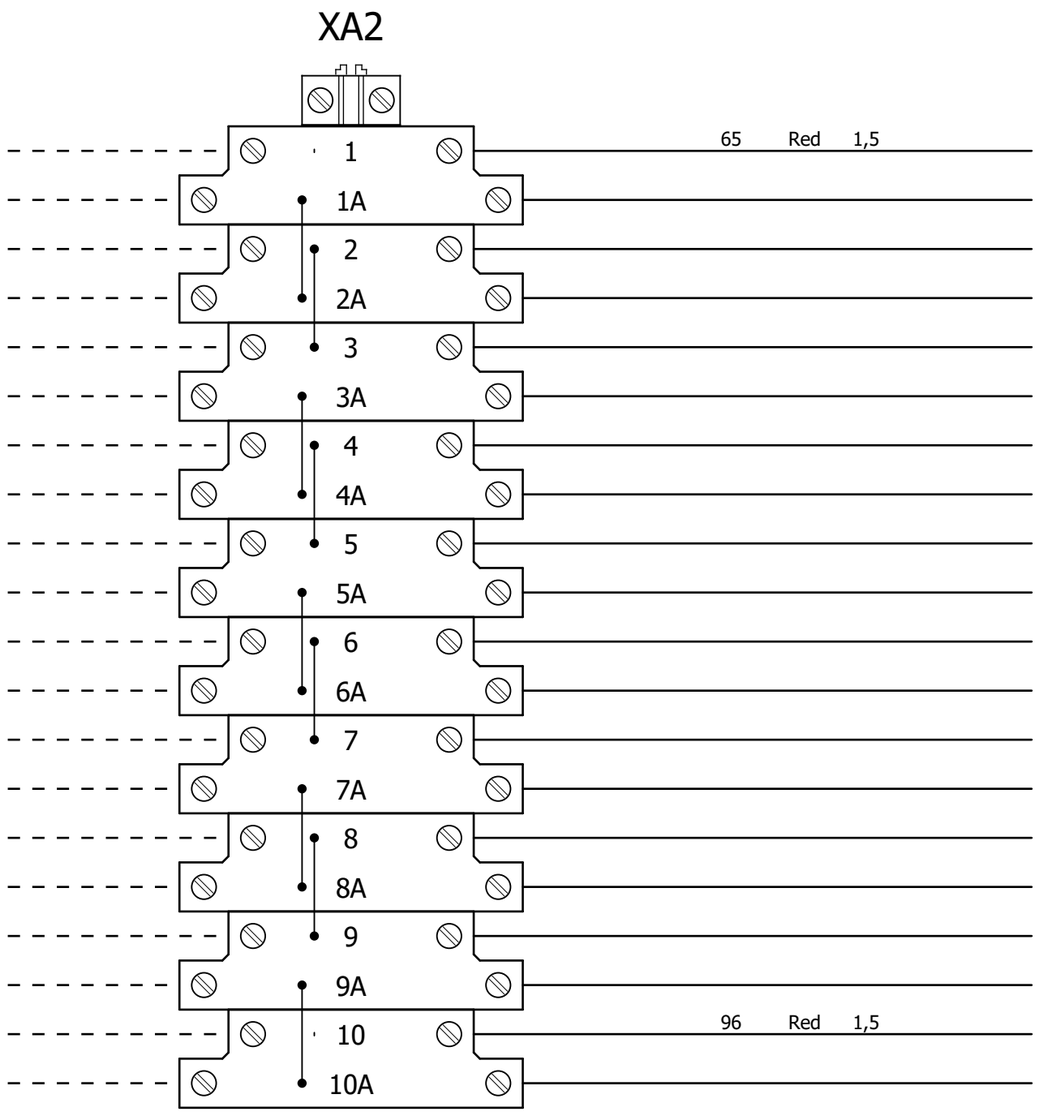

External targets	Teminal type	Terminal position on the drawings
	STTB 2,5	+QE/10.0:H
		+QE/10.1:H
	STTB 2,5	+QE/10.1:H
		+QE/10.1:H
	STTB 2,5	+QE/10.2:H
		+QE/10.2:H
	STTB 2,5	+QE/10.3:H
		+QE/10.3:H
	STTB 2,5	+QE/10.3:H
		+QE/10.4:H
	STTB 2,5	+QE/10.4:H
		+QE/10.4:H
	STTB 2,5	+QE/10.5:H
		+QE/10.5:H
	STTB 2,5	+QE/10.6:H
		+QE/10.6:H
	STTB 2,5	+QE/10.6:H
		+QE/10.7:H
	STTB 2,5	+QE/10.7:H
		+QE/10.8:H

BOM internal panel

InternoQE_F01_003

Short name	Designation	Function text	Position	Manufacturer	Component tipe	Oracle code
AP1	Programmable control		(Quadro elettrico)	CAREL	PCO Compact	PCOXLV0DB0
AP2	Damping magnet, M 5.0		(Quadro elettrico)	KE-KITAGAWA	FERRITE CORE	0907877AXX
AP3	Scheda seriale BMS		=+QE/9.6:B	CAREL	Scheda seriale BMS	PCOS004850
AP4	Programmable control		=+QE/5.0:A	CAREL	PCO Compact	PCOXLV0DB0
AP5	Damping magnet, M 5.0	FERRITE 2 SPIRE	=+QE/5.1:D	KE-KITAGAWA	FERRITE CORE	0907877AXX
E1	Earth terminal	GROUND BAR	=+QE/1.2:D	SCHNEIDER ELECTRIC	14977	2217096CEL
HL1	White lamp 24Vac		(Quadro elettrico)	EATON ELECTRIC	M22-LED-W	0505103CEL
HL2	Green indicator plate	POWER ON	=+QE/5.1:F	EATON ELECTRIC	M22-L-G	0505187AXX
HL2	Plate	=	=+QE/5.1:F	CEMBRE	15X27	1800243AXX
HL2	Support plate	=	=+QE/5.1:F	CEMBRE	D22 17X30	1800242AXX
HL2	Glass plate	=	=+QE/5.1:F	CEMBRE	15X27	1800244AXX
HL2	Support	=	=+QE/5.1:F	EATON ELECTRIC	M22-A	0505184AXX
HL2	Green lap 24Vac	=	=+QE/5.1:F	EATON ELECTRIC	M22-LED-G	0505101CEL
KR1	Relay	ALARM RELAY	=+QE/10.1:E	FINDER	40.52.8.230.0000	0100751CEL
KR1	Base element	=	=+QE/10.1:E	FINDER	95.05	5931384AXX
M1	Internal fan	EXTRACTOR	=+QE/7.5:F	EZM	150x150	1312697AXX
PE	GROUND		=+QE/1.0:G		PE	PE
PE1	GROUND		=+QE/1.1:H		PE	PE
PE2	GROUND		=+QE/1.2:H		PE	PE
PE3	GROUND		=+QE/1.3:H		PE	PE
PE5	GROUND		=+QE/7.5:G		PE	PE
PE6	GROUND		=+QE/4.4:H		PE	PE
QF1	Power circuit breaker	PROTECTION 1	=+QE/1.4:C	EATON ELECTRIC	FAZ6-C10/3	0403856CEL

BOM internal panel

InternoQE_F01_003

Short name	Designation	Function text	Position	Manufacturer	Component tipe	Oracle code
QF2	Power circuit breaker	PROTECTION 2	=+QE/1.6:C	EATON ELECTRIC	FAZ6-C10/3	0403856CEL
QF3	Power circuit breaker	PROTECTION 3	=+QE/1.8:C	EATON ELECTRIC	FAZ6-C10/3	0403856CEL
QF4	Power circuit breaker	PROTECTION 4	=+QE/2.1:C	EATON ELECTRIC	FAZ6-C10/3	0403856CEL
QF5	Power circuit breaker	PROTECTION 5	=+QE/2.3:C	EATON ELECTRIC	FAZ6-C10/3	0403856CEL
QF6	Power circuit breaker	PROTECTION 6	=+QE/2.4:C	EATON ELECTRIC	FAZ6-C10/3	0403856CEL
QF7	Power circuit breaker	PROTECTION 7	=+QE/2.6:C	EATON ELECTRIC	FAZ6-C10/3	0403856CEL
QF8	Power circuit breaker	PROTECTION 8	=+QE/2.8:C	EATON ELECTRIC	FAZ6-C10/3	0403856CEL
QF9	Power circuit breaker	PROTECTION 9	=+QE/3.1:C	EATON ELECTRIC	FAZ6-C10/3	0403856CEL
QF10	Power circuit breaker	=	=+QE/3.2:C	EATON ELECTRIC	FAZ6-C10/3	0403856CEL
QF21	Power circuit breaker		(Quadro elettri co)	EATON ELECTRIC	FAZ6-C4/2	0403468AXX
QF22	Power circuit breaker		(Quadro elettri co)	EATON ELECTRIC	FAZ6-C4/1	0403824AXX
QF23	Power circuit breaker		(Quadro elettri co)	EATON ELECTRIC	FAZ6-C2/1	0403819AXX
QF24	Power circuit breaker	SECONDARY PROTECTION 24V	=+QE/4.2:G	EATON ELECTRIC	FAZ6-C4/1	0403824AXX
QF25	Power circuit breaker	TRANSFORMER PROTECTION	=+QE/4.2:B	EATON ELECTRIC	FAZ6-C4/2	0403468AXX
QF26	Power circuit breaker	230V SECONDARY PROTECTION	=+QE/4.3:G	EATON ELECTRIC	FAZ6-C2/1	0403819AXX
QS1	Disconnect switch	MAIN SWITCH	=+QE/1.1:E	SOCOMEC	Sirco M80	0402331AXX
QS1	Operation	=	=+QE/1.1:E	SOCOMEC	Y/R 16-80A	0402333AXX
RR1	Scaldiglia 200W 230V	HEATER E.P.	=+QE/7.4:D	EZM	091187	5729759AXX
ST1	SENSOR NTC WH IP68 -50T105 CABLE 1,5M	CABINET TEMPERATURE	=+QE/6.3:E	CAREL	NTC015WH01	NTC015WH01
TC1	TRANSFORMER		(Quadro elettri co)		400V-230V 310VA//24V 60AV - 230V 250VA	0910244AXX
TC2	TRANSFORMER	TRANSFORMER	=+QE/4.2:D		400V-230V 310VA//24V 60AV - 230V 250VA	0910244AXX

BOM external panel

EsternoQE_F01_003

Place	Short name	Function text	Position	Technical characteristics
+EXT	M1.1	Fan	=+QE/1.4:I	
+EXT	M1.2	=	=+QE/2.4:I	
+EXT	M2.1	=	=+QE/1.6:I	
+EXT	M2.2	=	=+QE/2.6:I	
+EXT	M3.1	=	=+QE/1.8:I	
+EXT	M3.2	=	=+QE/2.8:I	
+EXT	M4.1	=	=+QE/2.1:I	
+EXT	M4.2	=	=+QE/3.1:I	
+EXT	M5.1	=	=+QE/2.3:I	
+EXT	M5.2	=	=+QE/3.2:I	
+EXT	ST1	SIGNAL FOR FANS	=+QE/6.2:I	
+EXT	ST2	EXTERNAL AIR TEMP	=+QE/6.3:I	
+EXT	ST3	SIGNAL FOR FANS REGULATOR	=+QE/6.4:I	

alfa.luvegroup.com

Product code	CM00009387	Rev	6
Project description	EP 12 FANS ALFA-LUVE		

Supply voltage	3P+N+E - 400V - 50Hz	Operating temperature	40°C
Rated current	75A Icc 6KA		
Auxiliary voltage	24Vac/230Vac		

Designed by	Franco Meneghetti	on	02/02/2015
Checked by	Davide Marcolin	on	25/10/2019
Approved by	Franco Meneghetti	on	25/10/2019

NOT ALLOWED DELIVER TO THIRD PARTIES OR REPRODUCE THIS DOCUMENT NOT USE THE CONTENT OR OTHERWISE MAKE KNOWN TO THIRD PARTIES WITHOUT OUR EXPRESS PERMISSION. ANY INFRINGEMENT WILL RESULT IN DAMAGES SUFFERED. And it MADE SUBJECT TO ALL RIGHTS UNDER PATENTS OR MODELS

Cables Range

Cross-sect	N07V-K Range (A)	N07G9 Range (A)
0,5	\	NOT AVAILABLE
0,75	\	NOT AVAILABLE
1	8A	12A
1,5	11A	16A
2,5	15A	22.4A
4	20A	29.6A
6	26A	38.4A
10	36A	52.8A
16	48A	70.4A
25	64A	93.6A
35	80A	115.2A
50	95A	140A
95	150A	177.6A
120	170A	215.2A
150	195A	NOT AVAILABLE
185	220A	NOT AVAILABLE
240	260A	NOT AVAILABLE
300	300A	NOT AVAILABLE

Colors Table

Colors	Short name
Red	RD
Black	BK
Yellow	YE
Yellow\Green	GNYE
Orange	OG
Light blue	TQ
Blue	BU
Pink	PK
White	WH
Gray	GY
Brown	BN
Green	GN
Purple	VT
\	
\	
\	
\	

REVIEW TABLE

Rev.	Technical name	Date	Note
01	FRANCO MENEGHETTI	17/03/2015	- -
02	FRANCO MENEGHETTI	01/07/2015	- -
03	FRANCO MENEGHETTI	10/12/2015	- -
04	FRANCO MENEGHETTI	09/02/2016	- -
05	FRANCO MENEGHETTI	12/06/2017	- -
06	LUCA QUAGGIA	10/09/2019	- -

Table of contents

F06_003

Page	Page type	Page description	Date	Edited by
/1	Title page / cover sheet	Title page	03/02/2020	Luca Quaggia
/2	Pre-planning	Technical information	03/02/2020	Luca Quaggia
/3	Table of contents	Table of contents	03/02/2020	Luca Quaggia
/4	Model view	General view	03/02/2020	Luca Quaggia
/5	Model view	View of all sides	03/02/2020	Luca Quaggia
/6	Model view	Mounting plate view	03/02/2020	Luca Quaggia
/7	Model view	Door view	03/02/2020	Luca Quaggia
/8	Model view	Guides view	03/02/2020	Luca Quaggia
/9	Model view	Channels view	03/02/2020	Luca Quaggia
/10	Model view	Bottom view	03/02/2020	Luca Quaggia
+QE/1	Schematic multi-line	Power circuit	03/02/2020	Luca Quaggia
+QE/2	Schematic multi-line	Power circuit	03/02/2020	Luca Quaggia
+QE/3	Schematic multi-line	Power circuit	03/02/2020	Luca Quaggia
+QE/4	Schematic multi-line	Power circuit	03/02/2020	Luca Quaggia
+QE/5	Schematic multi-line	Auxiliary circuit	03/02/2020	Luca Quaggia
+QE/6	Schematic multi-line	Auxiliary circuit	03/02/2020	Luca Quaggia
+QE/6.a	Schematic multi-line	Auxiliary circuit	03/02/2020	Luca Quaggia
+QE/7	Schematic multi-line	Auxiliary circuit	03/02/2020	Luca Quaggia
+QE/8	Schematic multi-line	Auxiliary circuit	03/02/2020	Luca Quaggia
+QE/9	Schematic multi-line	Auxiliary circuit	03/02/2020	Luca Quaggia
+QE/10	Schematic multi-line	Auxiliary circuit	03/02/2020	Luca Quaggia
+QE/11	Schematic multi-line	Auxiliary circuit	03/02/2020	Luca Quaggia
+QE/12	Schematic multi-line	Auxiliary circuit	03/02/2020	Luca Quaggia
+QE/13	Schematic multi-line	Auxiliary circuit	03/02/2020	Luca Quaggia
+QE/14	Schematic multi-line	Auxiliary circuit	03/02/2020	Luca Quaggia
+QE/15	Graphic	Serial connection	03/02/2020	Luca Quaggia
+QE/16	Graphic	Certificazione	03/02/2020	Luca Quaggia
=REP1/1,0	Cable diagram	Multicore cables scheme	03/02/2020	Luca Quaggia
=REP1/1,1	Cable diagram	Multicore cables scheme	03/02/2020	Luca Quaggia
=REP1/1,2	Cable diagram	Multicore cables scheme	03/02/2020	Luca Quaggia
=REP1/1,3	Cable diagram	Multicore cables scheme	03/02/2020	Luca Quaggia
=REP1/2,0	Terminal diagram	Terminal strip	03/02/2020	Luca Quaggia
=REP1/2,0.a	Terminal diagram	Terminal strip	03/02/2020	Luca Quaggia
=REP1/2,1	Terminal diagram	Terminal strip	03/02/2020	Luca Quaggia
=REP1/3,0	Parts list	BOM internal panel	03/02/2020	Luca Quaggia
=REP1/3,0.a	Parts list	BOM internal panel	03/02/2020	Luca Quaggia
=REP1/4,0	Parts list	BOM external panel	03/02/2020	Luca Quaggia

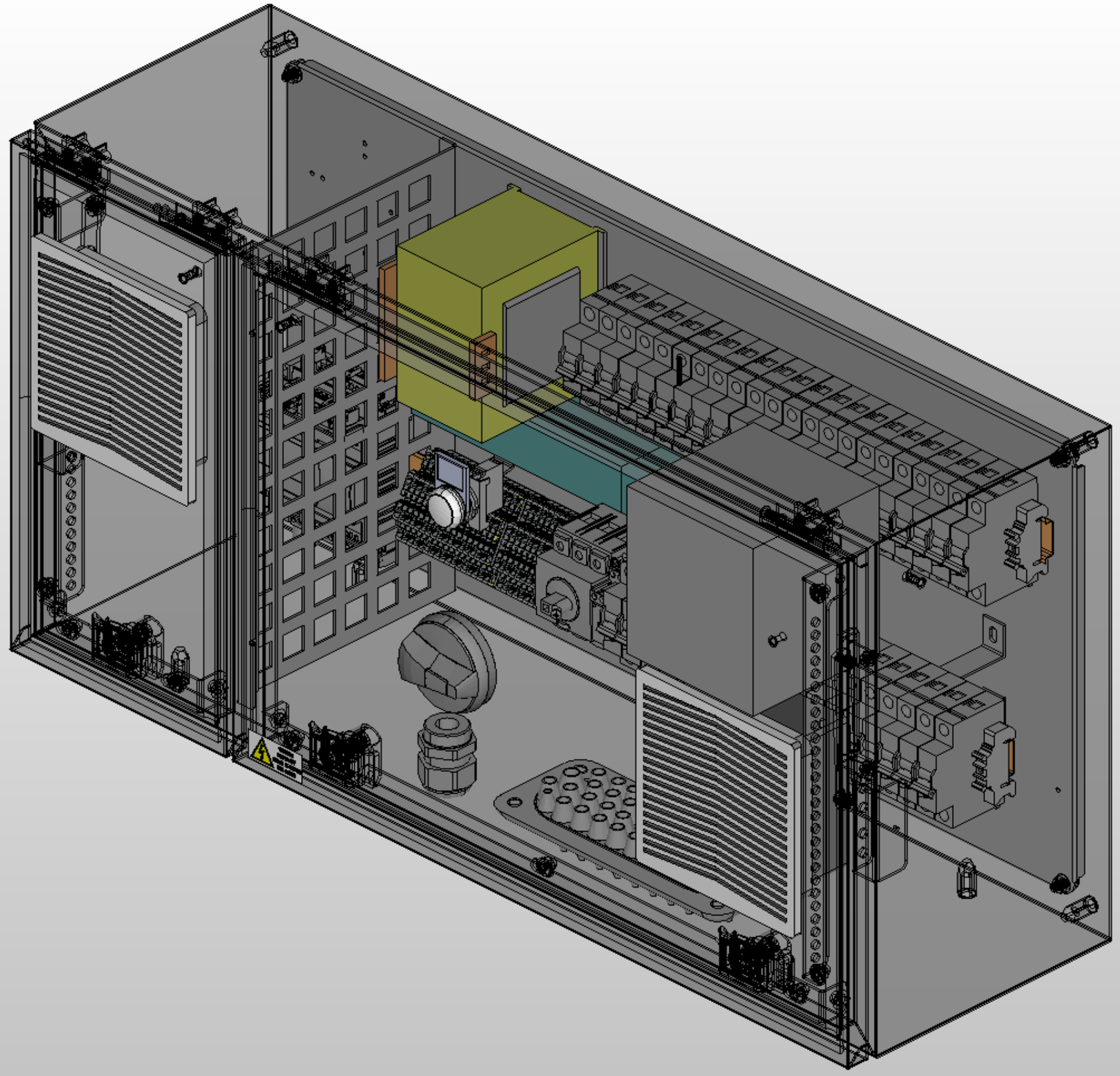

			Date	02/02/2015	CM00009387	ALFA LU-VE	General view	Mounting locations +	Page /4
			Elab.	Franco Meneghetti	EP 12 FANS ALFA-LUVE				Next 5
								Function =	Total pages 37
Modification	Date	Name							

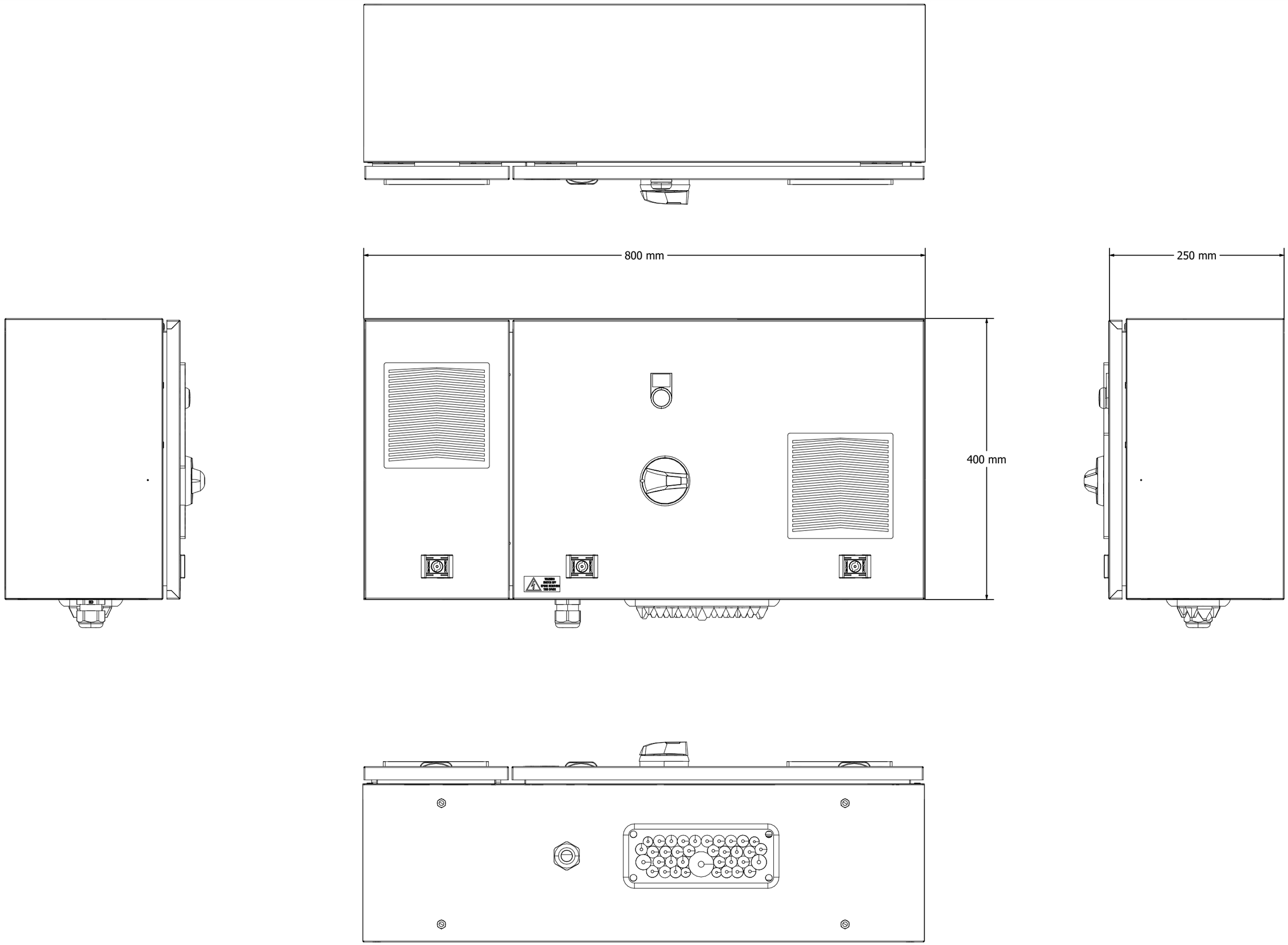

			Date	02/02/2015	CM00009387	ALFA LU-VE	View of all sides	Mounting locations +	Page /5
			Elab.	Franco Meneghetti	EP 12 FANS ALFA-LUVE				Next 6
Modification	Date	Name						Function =	Total pages 37

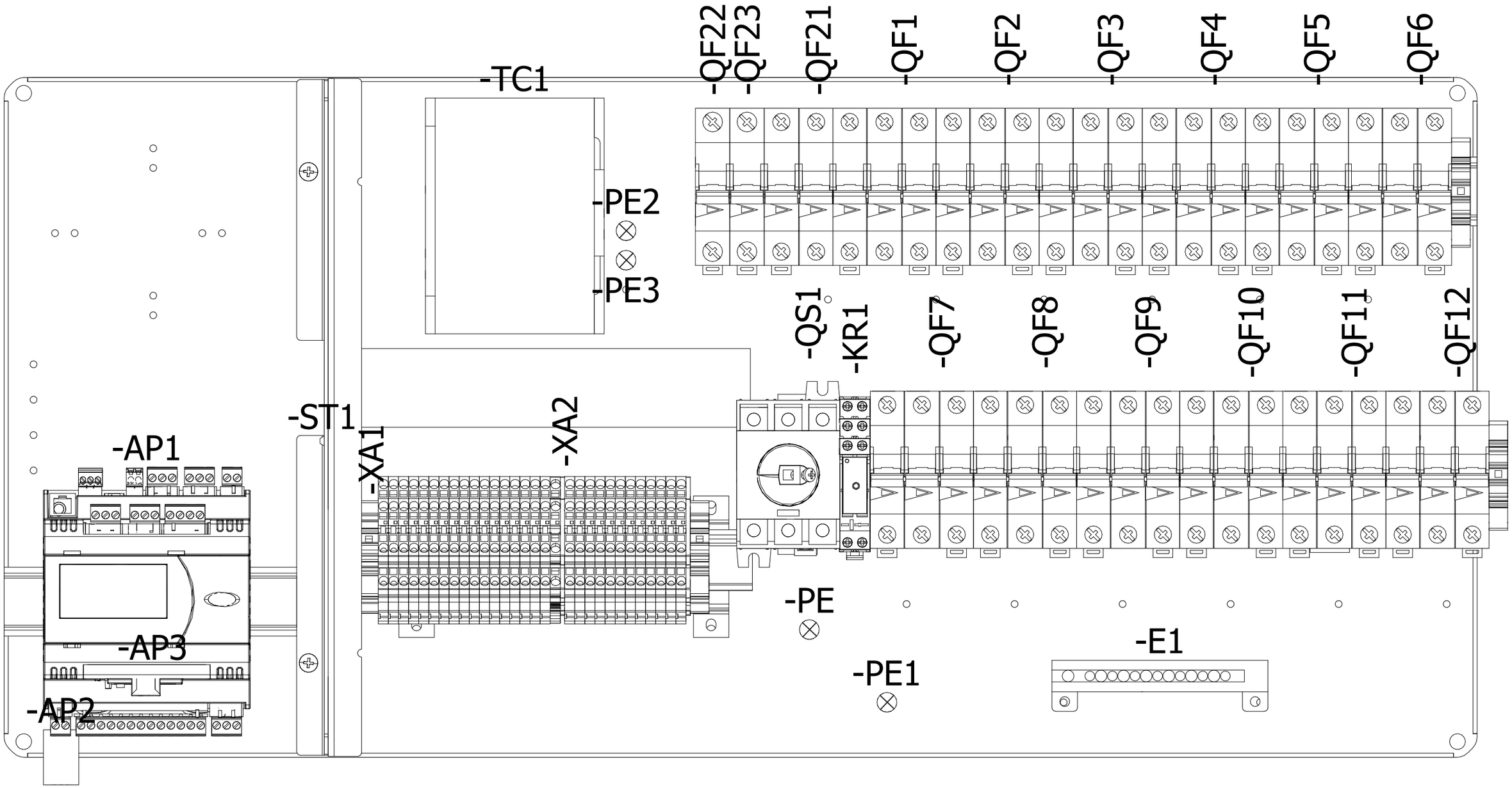

			Date	02/02/2015	CM00009387	ALFA LU-VE	Mounting plate view	Mounting locations +	Page /6
			Elab.	Franco Meneghetti	EP 12 FANS ALFA-LUVE				Next 7
Modification	Date	Name						Function =	Total pages 37

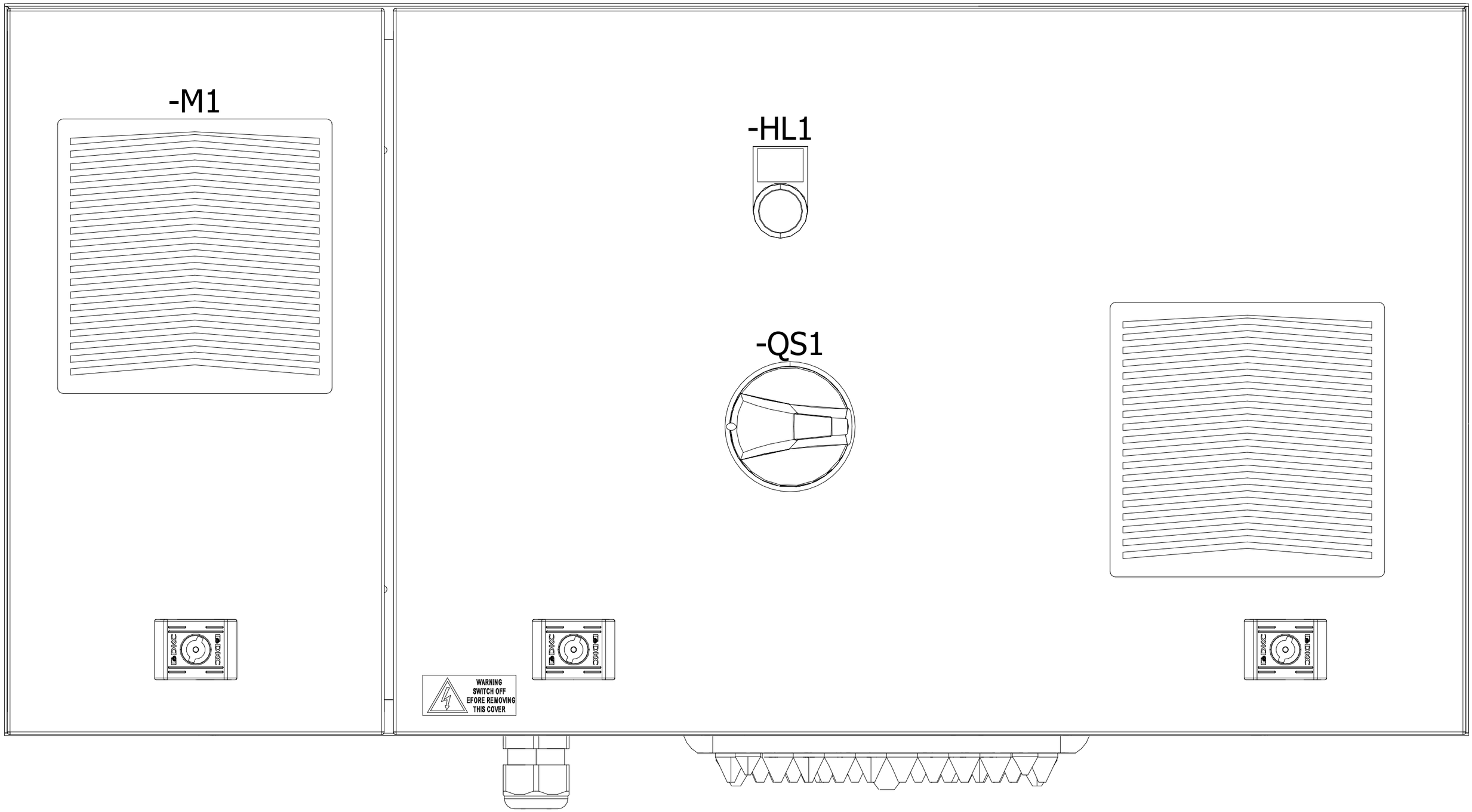

			Date	02/02/2015	CM00009387	ALFA LU-VE	Door view	Mounting locations +	Page /7
			Elab.	Franco Meneghetti	EP 12 FANS ALFA-LUVE				Next 8
								Function =	Total pages 37
Modification	Date	Name							

Layout guides and channels

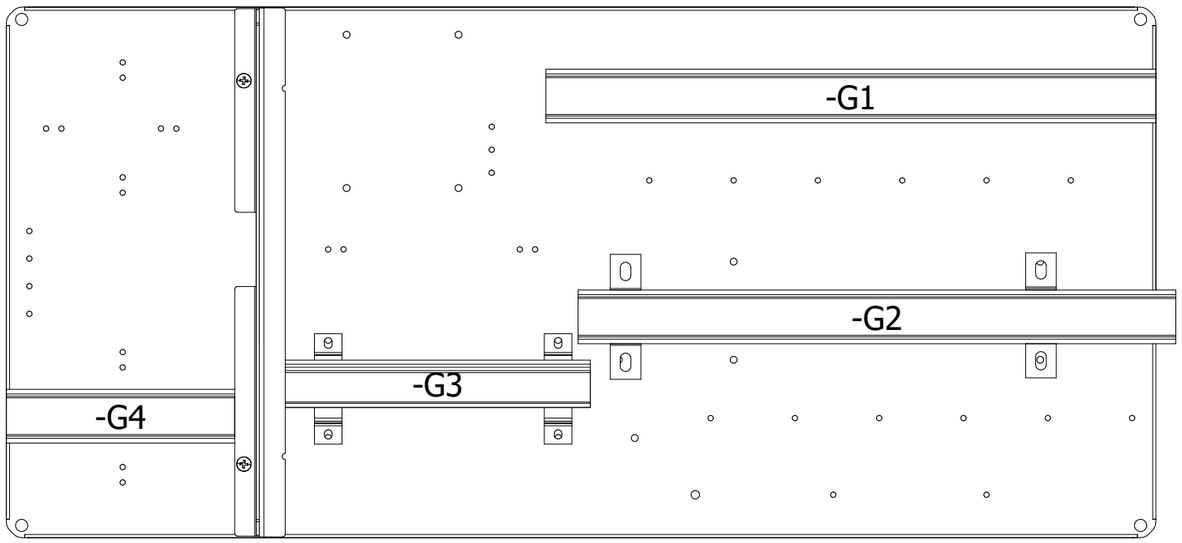

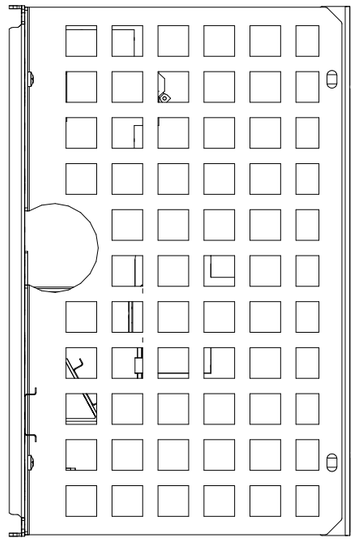

Sign	Type	Length (Tollerance -5mm)
U6	Inclined Bracket	
U7	Inclined Bracket	

G1	35x7.5	400 mm
G2	35x7.5	390 mm
G3	35x7.5	200 mm
G4	35x7.5	150 mm

U5	Support H=70mm	
U4	Support H=70mm	

U1	2cm Rise	
U2	2cm Rise	
U3	2cm Rise	

Empty

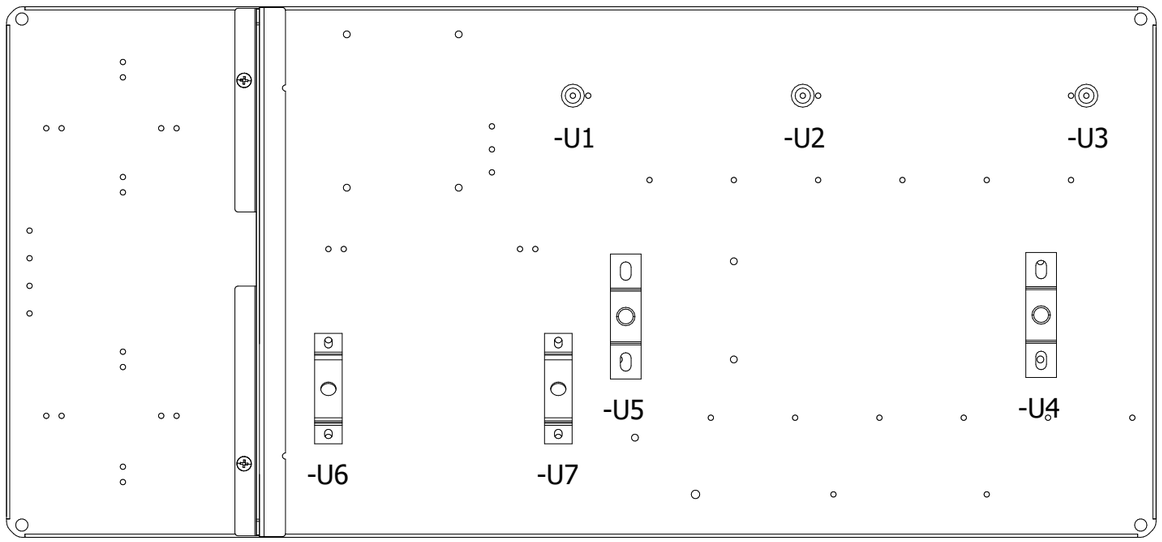

Empty

			Date	02/02/2015
			Elab.	Franco Meneghetti
Modification	Date	Name		

CM00009387

EP 12 FANS ALFA-LUVE

ALFA LU-VE

Guides view

Mounting locations +

Function =

Page /8

Next 9

Total pages 37

Layout guides and channels

Sign	Type	Length (Tollerance -5mm)
C1	40x60	205 mm

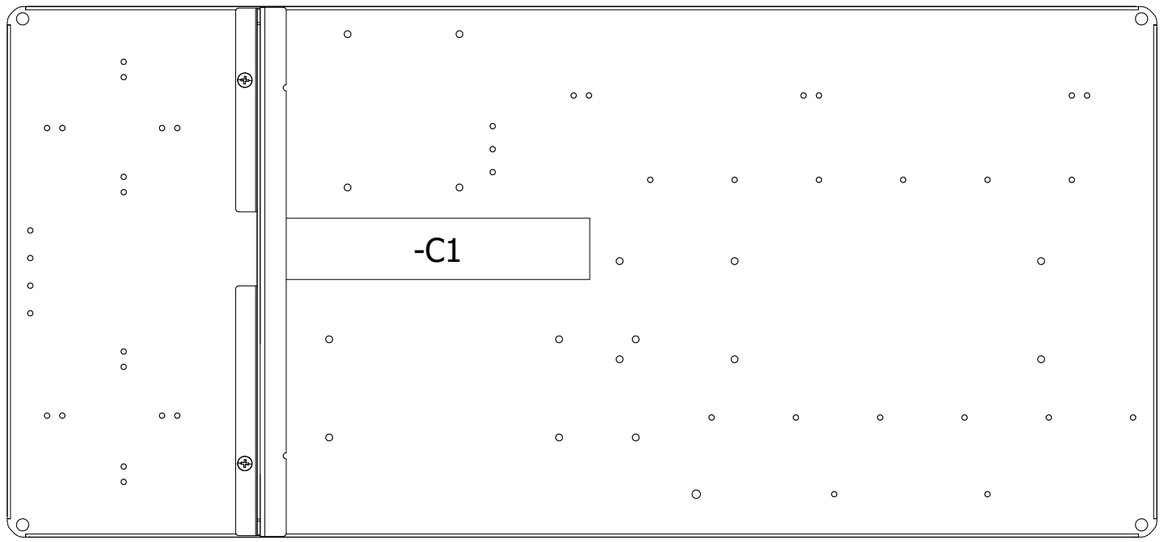

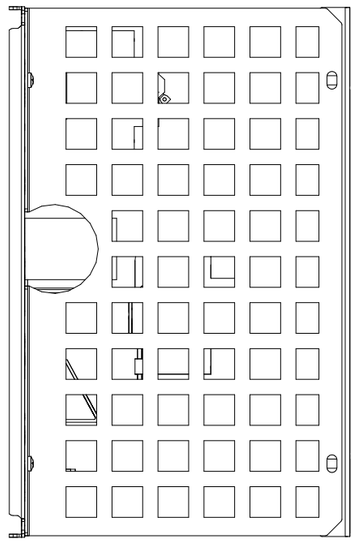

			Date	02/02/2015
			Elab.	Franco Meneghetti
Modification	Date	Name		

CM00009387

EP 12 FANS ALFA-LUVE

ALFA LU-VE

Channels view

Mounting locations +

Function =

Page /9

Next 10

Total pages 37

Cable entry/exit components

Item number	Component tipe	Drilling (Tollerance +-0.5mm)
1	M32 Gland	Ø 32.5mm
2	Passacavo multiforo	

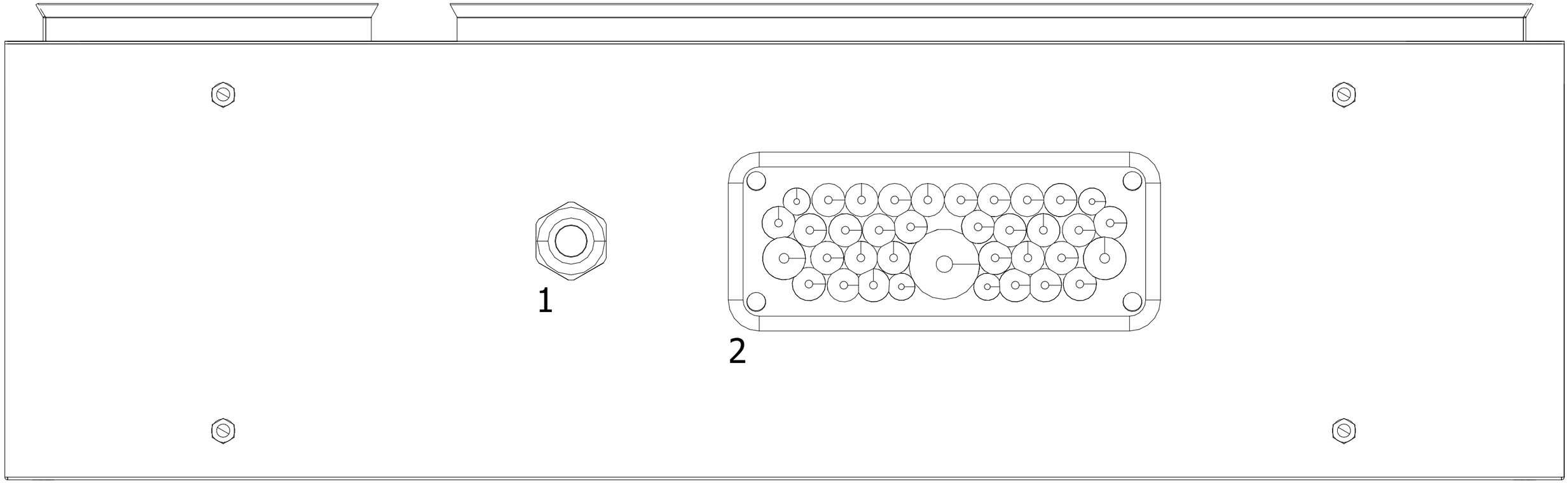

1

			Date	02/02/2015
			Elab.	Franco Meneghetti
Modification	Date	Name		

CM00009387

EP 12 FANS ALFA-LUVE

Bottom view

Mounting locations +

Function =

Page /10

Next +QE/1

Total pages 37

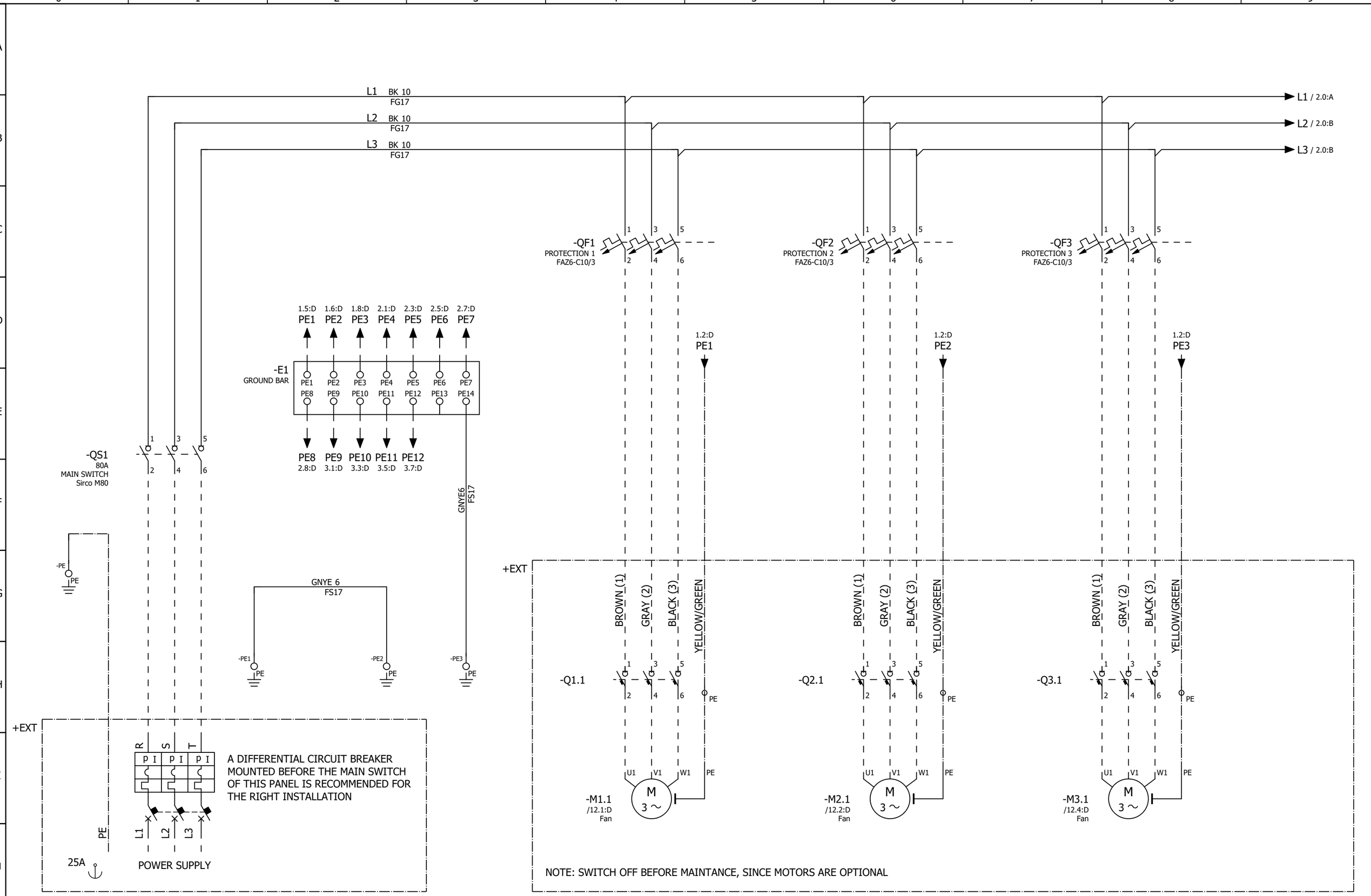

			Date	02/02/2015
			Elab.	Franco Meneghetti
Modification	Date	Name		

CM00009387

EP 12 FANS ALFA-LUVE

ALFA LU-VE

Power circuit

Mounting locations + QE

Function =

Page +QE/1

Next 2

Total pages 37

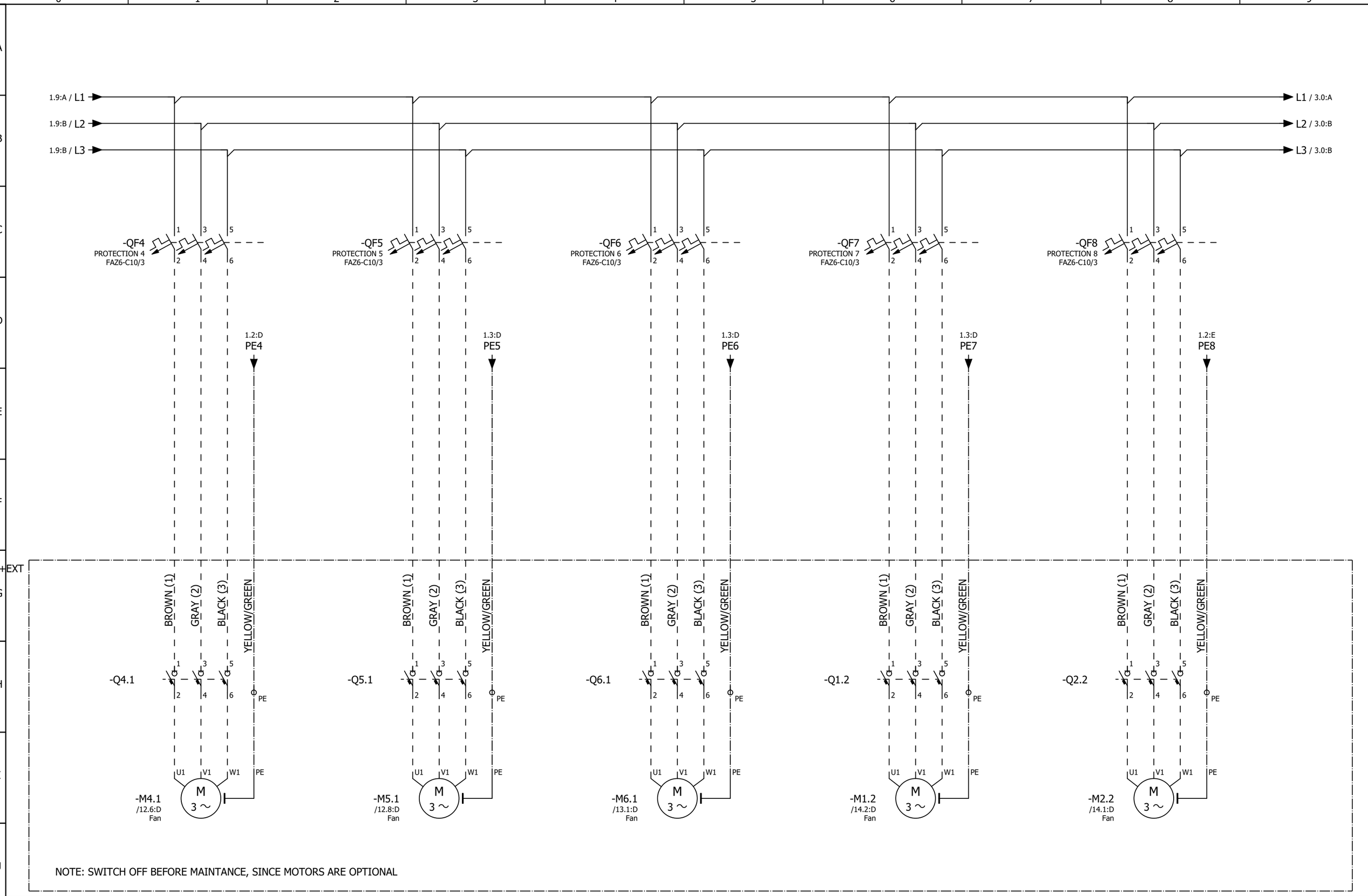

NOTE: SWITCH OFF BEFORE MAINTANCE, SINCE MOTORS ARE OPTIONAL

			Date	02/02/2015	CM00009387	ALFA LU-VE	Power circuit	Mounting locations + QE
			Elab.	Franco Meneghetti	EP 12 FANS ALFA-LUVE			Function =
Modification	Date	Name						

Page	+QE/2
Next	3
Total pages	37

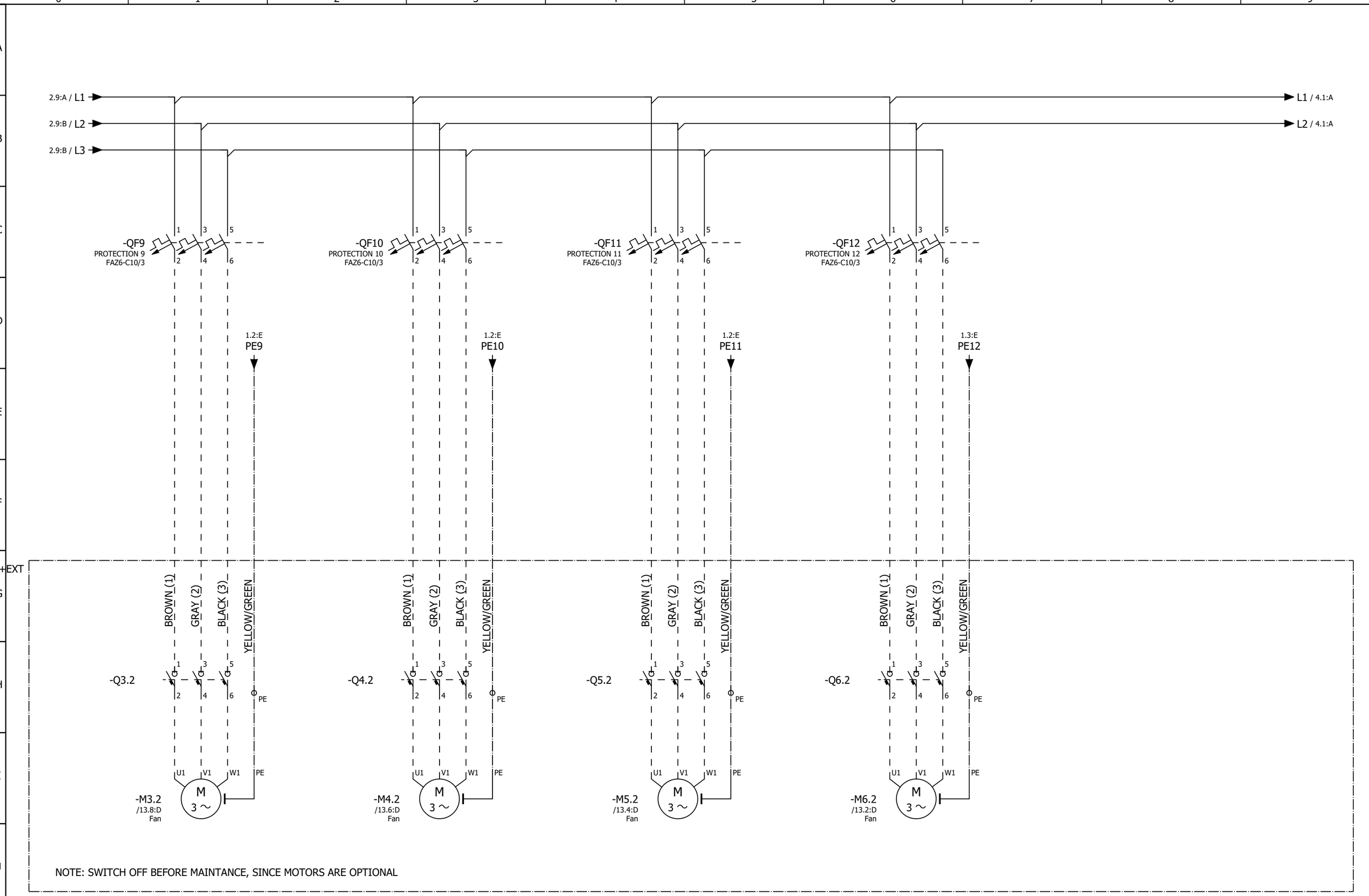

			Date	02/02/2015
			Elab.	Franco Meneghetti
Modification	Date	Name		

CM00009387

EP 12 FANS ALFA-LUVE

ALFA LU-VE

Power circuit

Mounting locations + QE

Function =

Page +QE/3

Next 4

Total pages 37

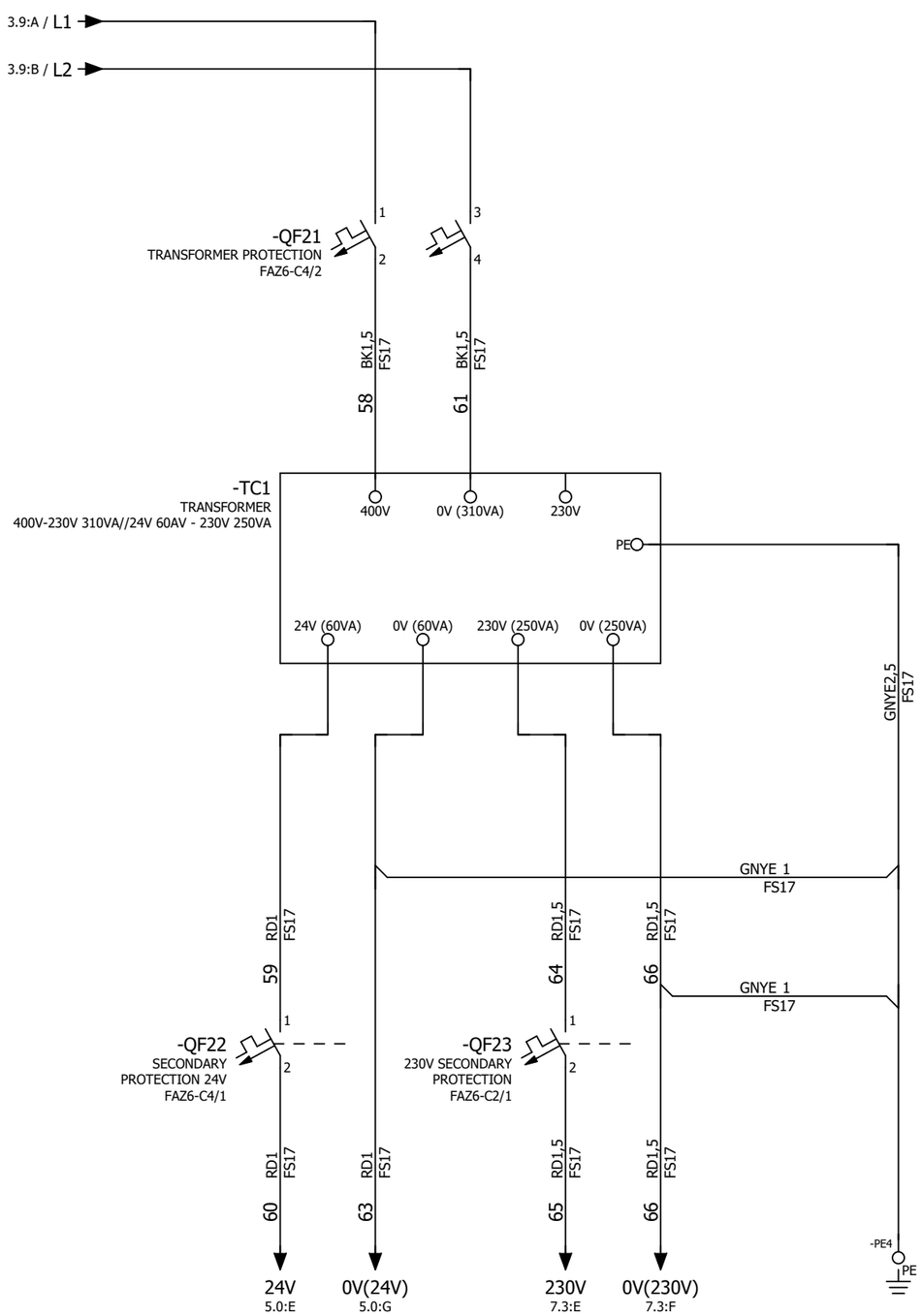

			Date	02/02/2015	CM00009387	Power circuit	Mounting locations + QE	Page +QE/4
			Elab.	Franco Meneghetti	EP 12 FANS ALFA-LUVE			Next 5
							Function =	Total pages 37
Modification	Date	Name						

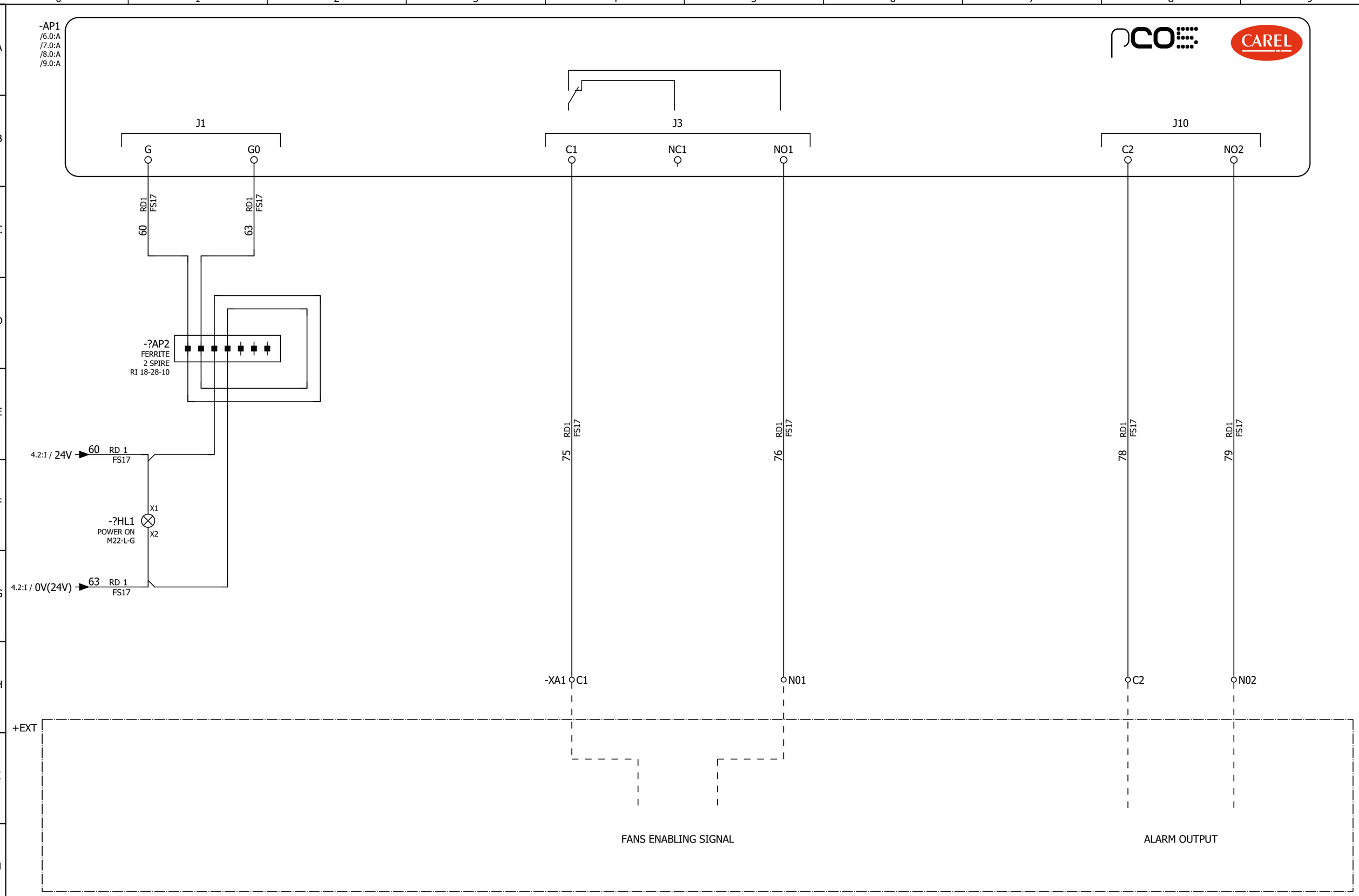

			Date	02/02/2015
			Elab.	Franco Meneghetti
Modification	Date	Name		

CM00009387

EP 12 FANS ALFA-LUVE

Auxiliary circuit

Mounting locations + QE

Function =

Page +QE/5

Next 6

Total pages 37

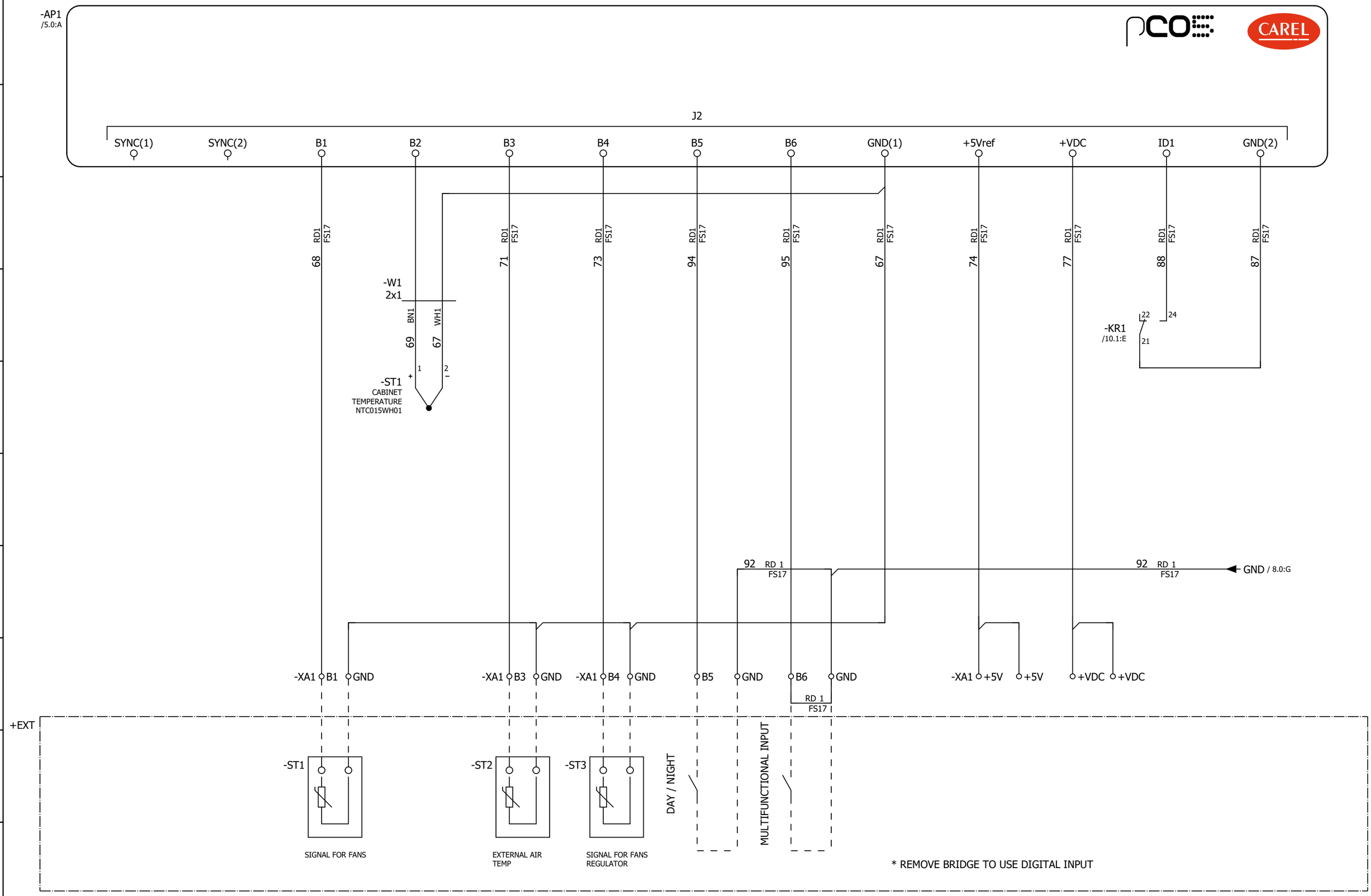

			Date	02/02/2015
			Elab.	Franco Meneghetti
Modification	Date	Name		

CM00009387

EP 12 FANS ALFA-LUVE

Auxiliary circuit

Mounting locations + QE

Function =

Page +QE/6

Next 6.a

Total pages 37

NO PT1000
B1 SIGNAL FOR FANS (NTC)
B2 E.P. TEMPERATURE (NTC)
B3 EXTERNAL AIR TEMPERATURE (NTC)
B4 ----------

WITH PT1000
B1 ----------
B2 E.P. TEMPERATURE (NTC)
B3 EXTERNAL AIR TEMPERATURE (NTC)
B4 SIGNAL FOR FANS (PT1000)

PROBE CONNECTIONS

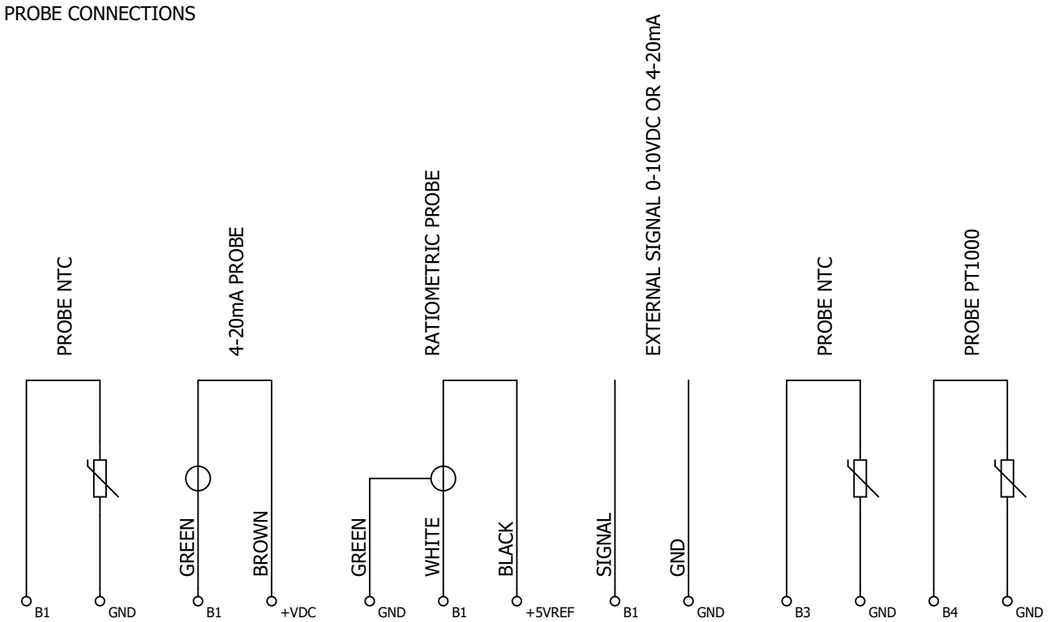

			Date	02/02/2015
			Elab.	Franco Meneghetti
Modification	Date	Name		

CM00009387

EP 12 FANS ALFA-LUVE

ALFA LU-VE

Auxiliary circuit

Mounting locations + QE

Function =

Page +QE/6.a

Next 7

Total pages 37

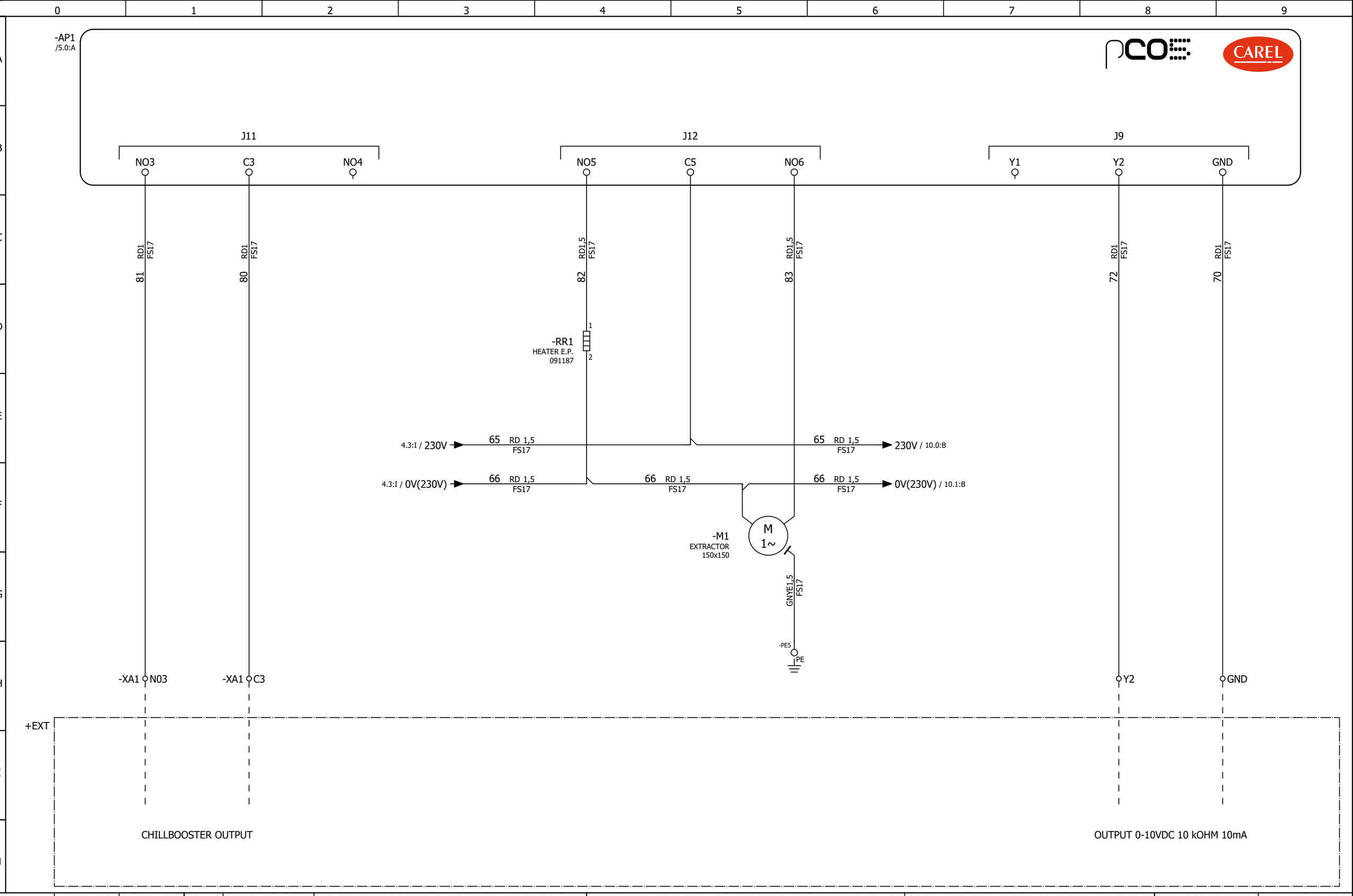

			Date	02/02/2015	CM00009387	ALFA LU-VE	Auxiliary circuit	Mounting locations + QE	Page +QE/7
			Elab.	Franco Meneghetti	EP 12 FANS ALFA-LUVE				Next 8
								Function =	Total pages 37
Modification	Date	Name							

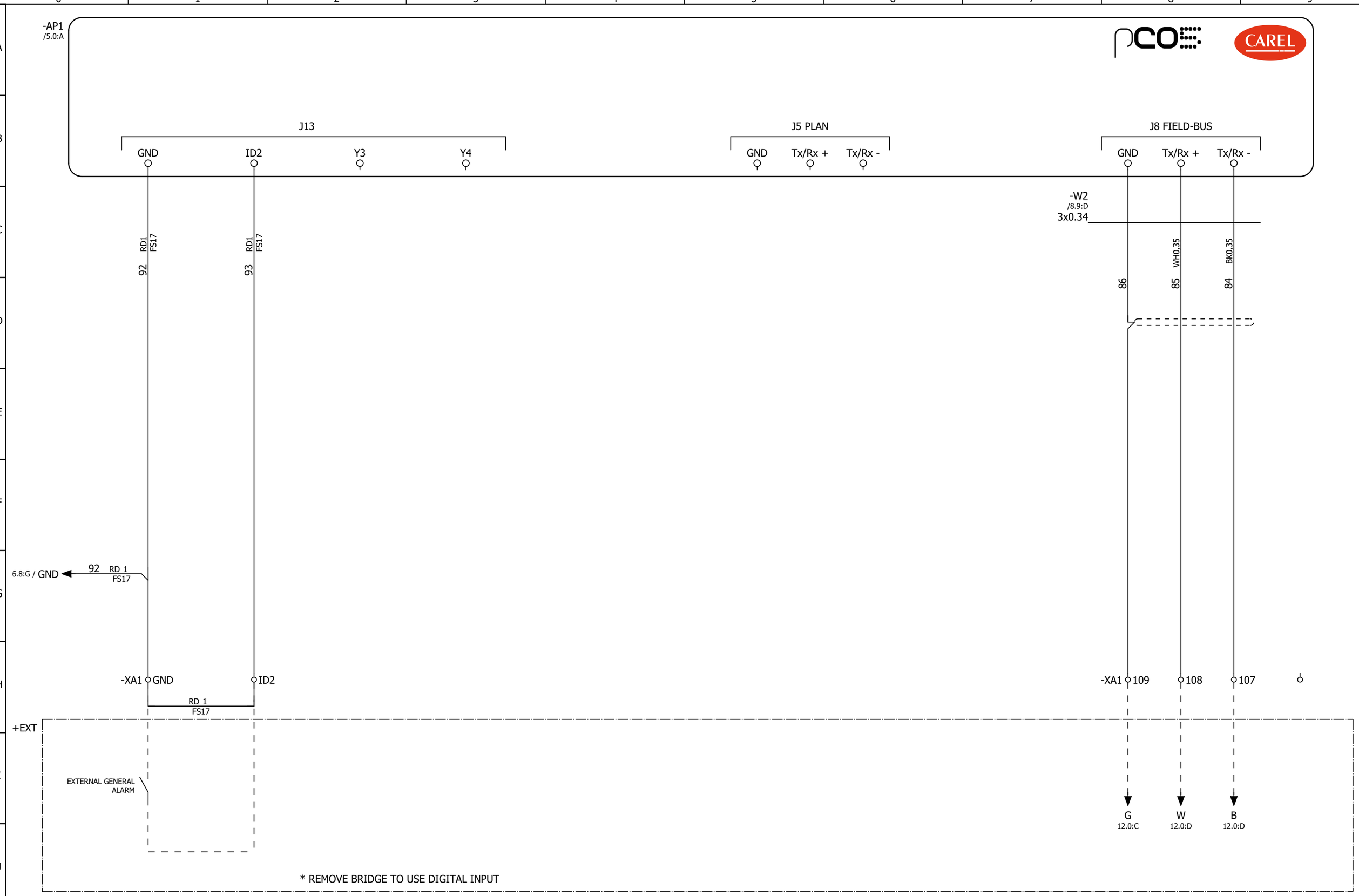

			Date	02/02/2015
			Elab.	Franco Meneghetti
Modification	Date	Name		

CM00009387

EP 12 FANS ALFA-LUVE

Auxiliary circuit

Mounting locations + QE

Function =

Page +QE/8

Next 9

Total pages 37

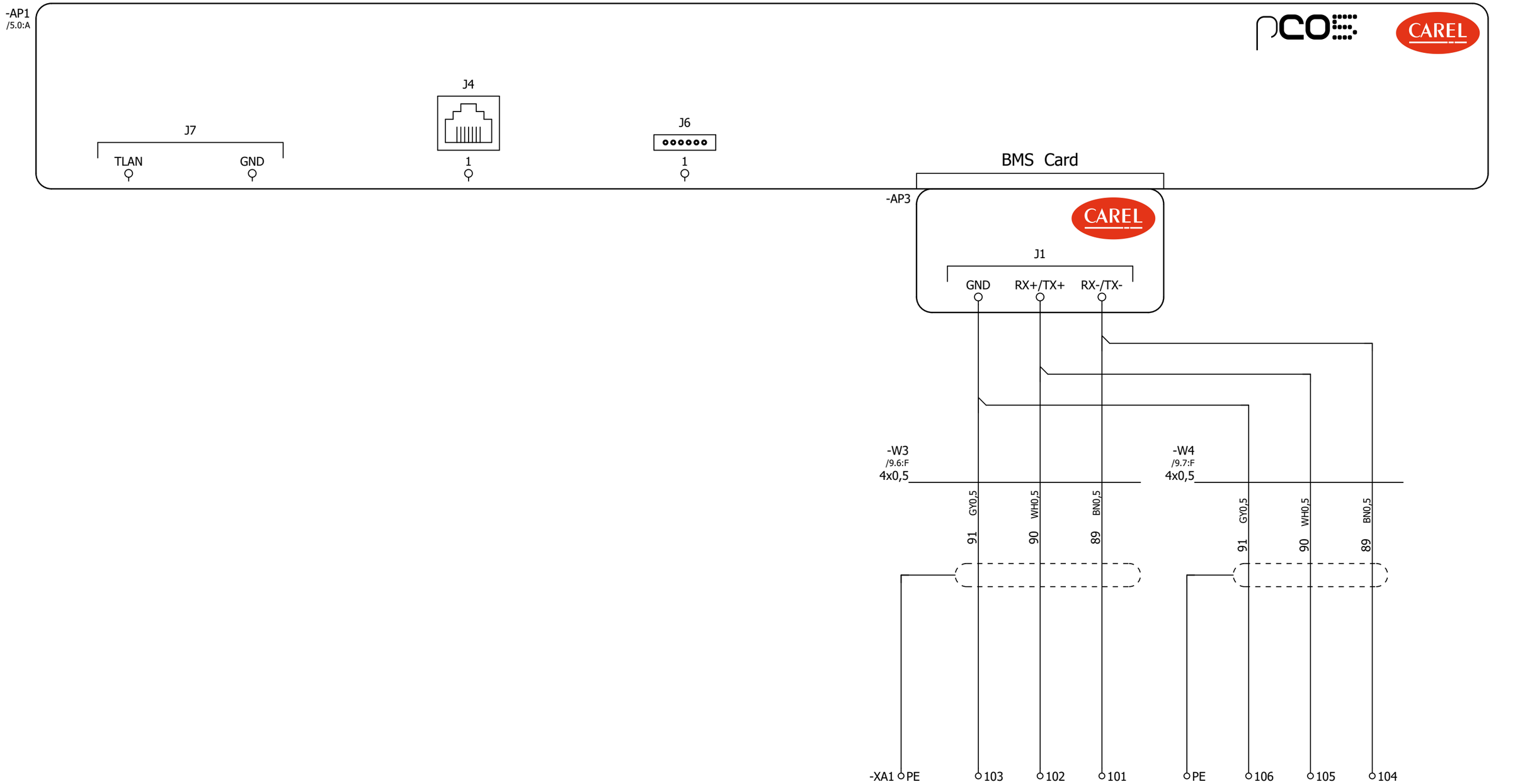

+EXT

			Date	02/02/2015	CM00009387	Auxiliary circuit	Mounting locations + QE	Page +QE/9
			Elab.	Franco Meneghetti	EP 12 FANS ALFA-LUVE			Next 10
							Function =	Total pages 37
Modification	Date	Name						

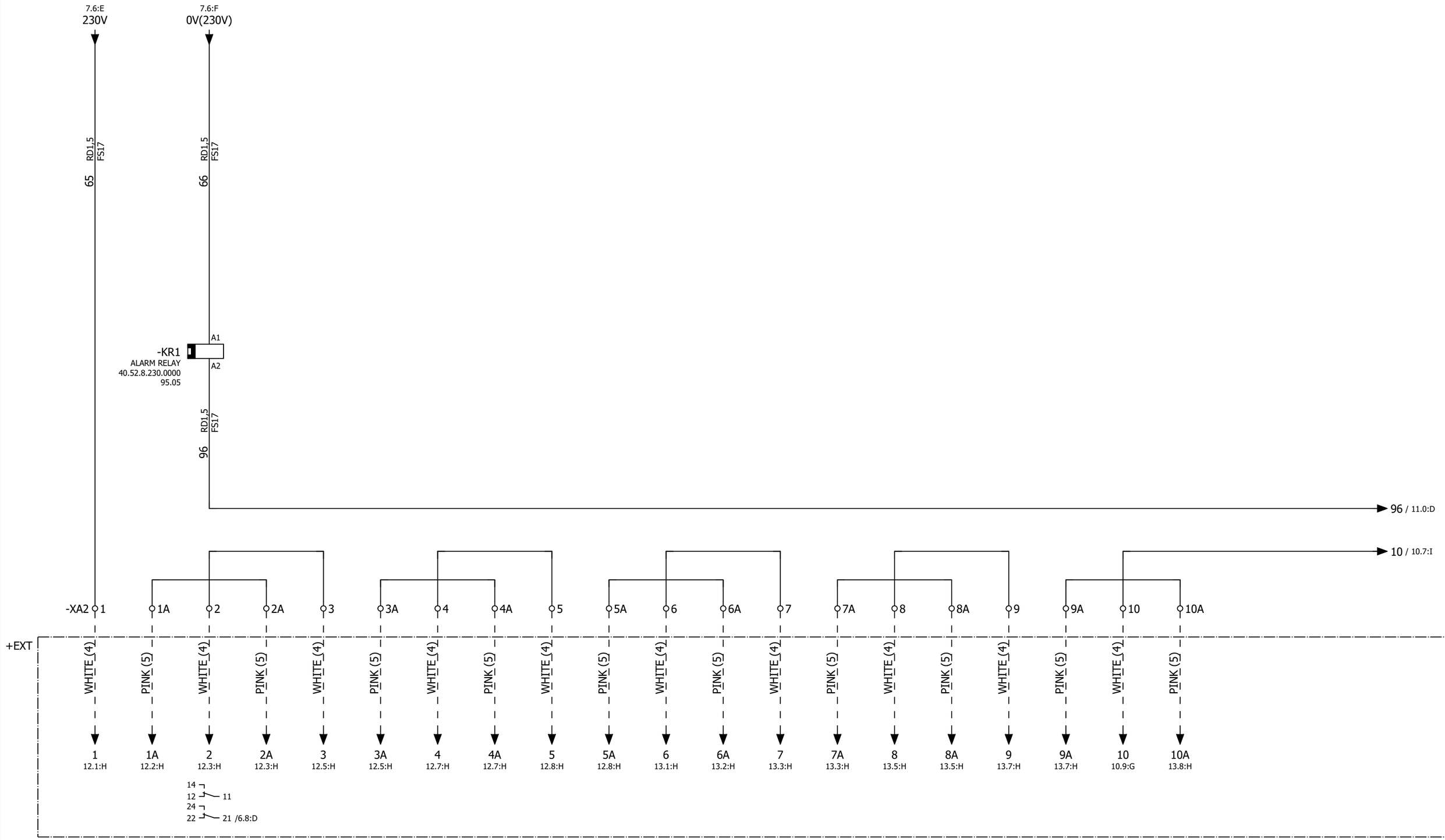

			Date	02/02/2015	CM00009387	ALFA LU-VE	Auxiliary circuit	Mounting locations + QE	Page +QE/10
			Elab.	Franco Meneghetti	EP 12 FANS ALFA-LUVE			Function =	Next 11
Modification	Date	Name							Total pages 37

			Date	02/02/2015
			Elab.	Franco Meneghetti
Modification	Date	Name		

CM00009387

EP 12 FANS ALFA-LUVE

ALFA LU-VE

Auxiliary circuit

Mounting locations + QE

Function =

Page +QE/11

Next 12

Total pages 37

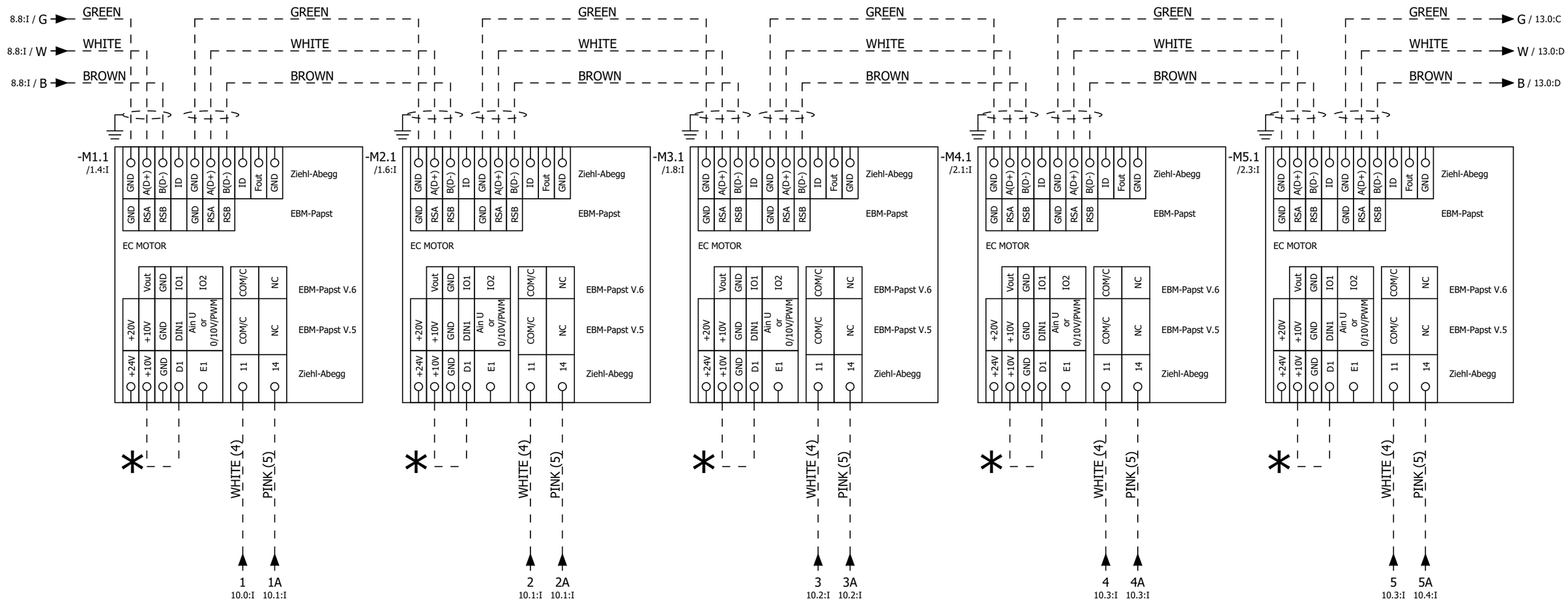

* CONNECTION NEEDED ONLY FOR ZIEHL-ABBEGG FANS

			Date	02/02/2015	CM00009387	ALFA LU-VE	Auxiliary circuit	Mounting locations + QE	Page +QE/12
			Elab.	Franco Meneghetti	EP 12 FANS ALFA-LUVE			Function =	Next 13
Modification	Date	Name							Total pages 37

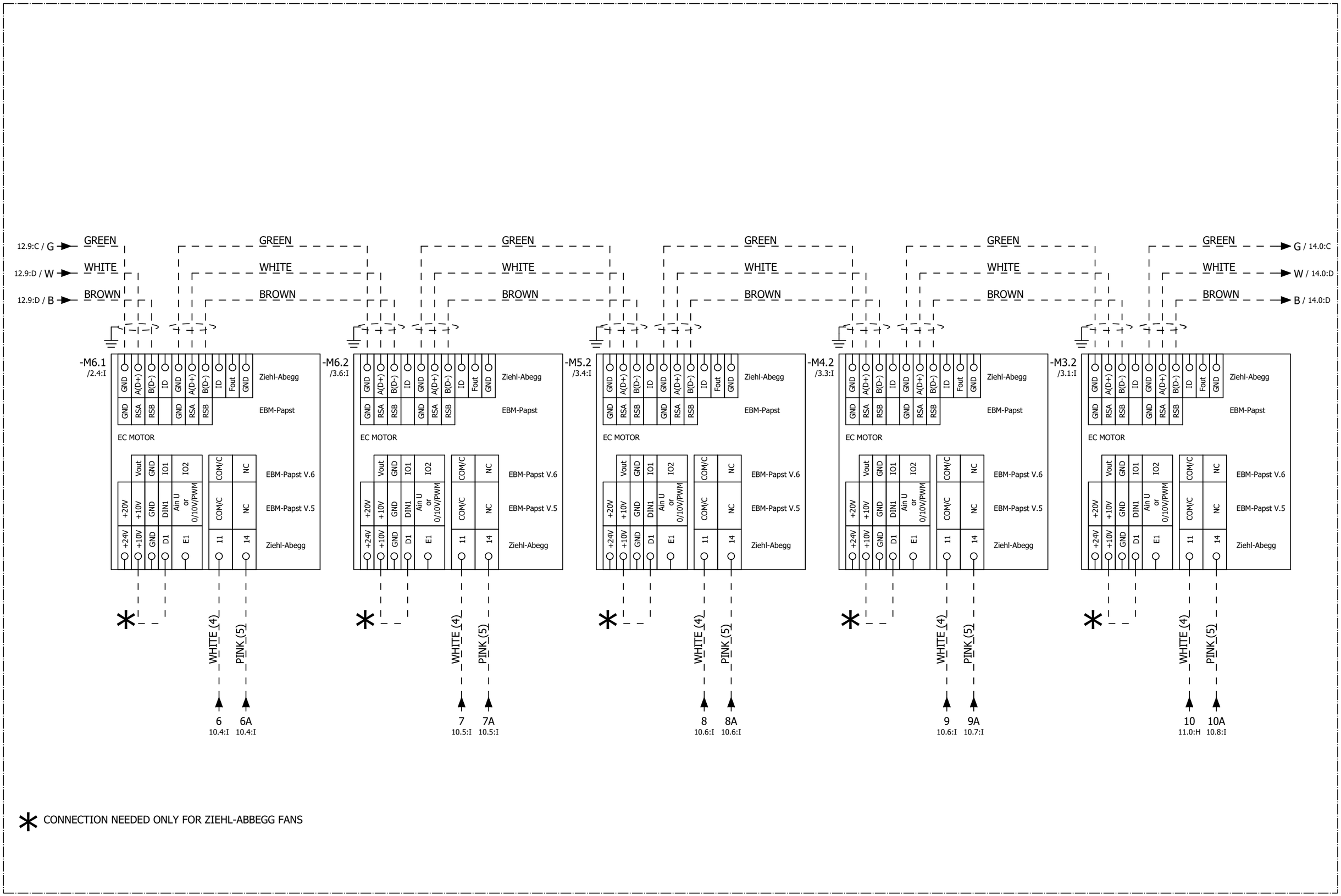

			Date	02/02/2015
			Elab.	Franco Meneghetti
Modification	Date	Name		

CM00009387

EP 12 FANS ALFA-LUVE

ALFA LU-VE

Auxiliary circuit

Mounting locations + QE

Function =

Page +QE/13

Next 14

Total pages 37

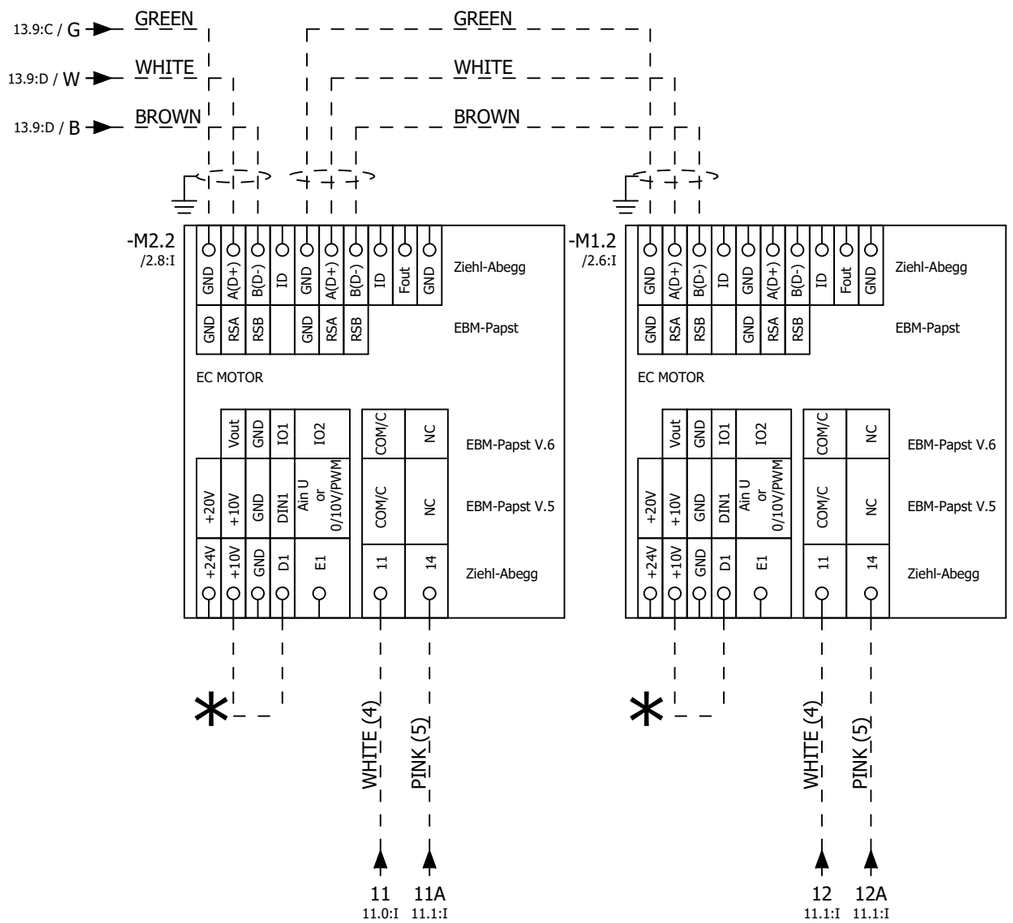

* CONNECTION NEEDED ONLY FOR ZIEHL-ABBEGG FANS

			Date	02/02/2015	CM00009387	ALFA LU-VE	Auxiliary circuit	Mounting locations + QE	Page +QE/14
			Elab.	Franco Meneghetti	EP 12 FANS ALFA-LUVE			Function =	Next 15
Modification	Date	Name							Total pages 37

12 FAN MOTORS

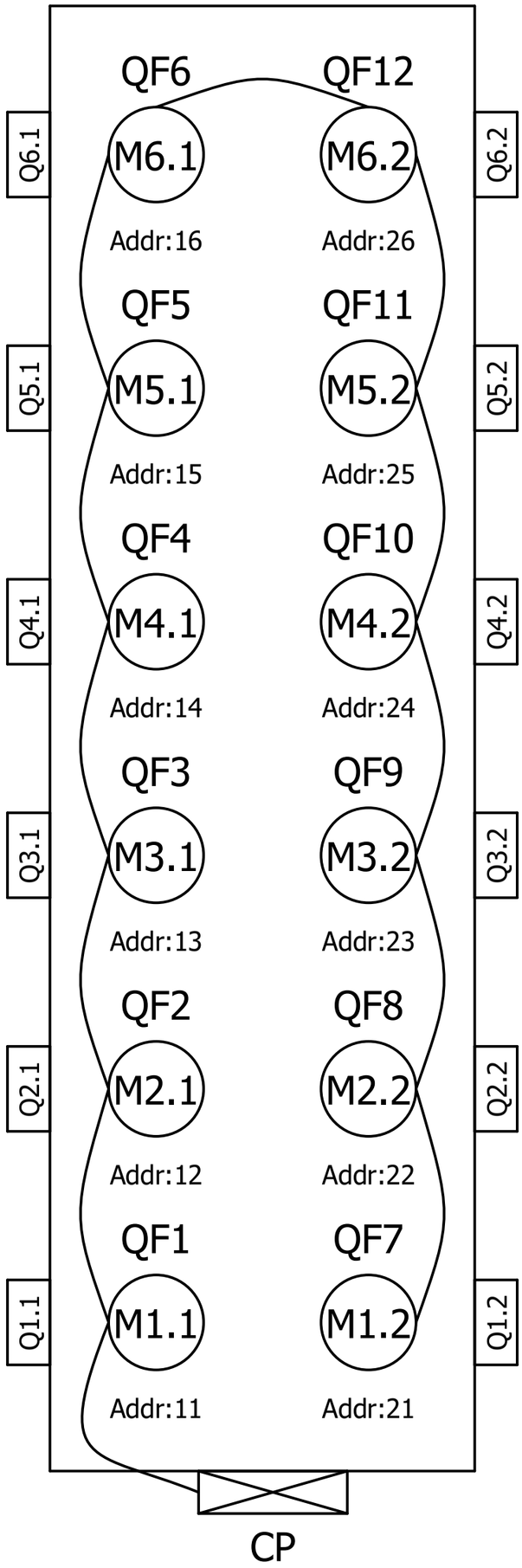

Page	+QE/15
Next	16
Total pages	37
Mounting locations	+ QE
Function	=

Serial connection

ALFA LU-VE

CM00009387

EP 12 FANS ALFA-LUVE

Date	02/02/2015	
Elab.	Franco Meneghetti	
Modification	Date	Name

CAREL INDUSTRIES S.p.A. • Società Unipersonale
Via dell'Industria, 11 • 35020 Brugine – Padova – Italia
Tel. (+39) 049.9716611 – Fax (+39) 049.9716600
www.carel.com – e-mail: carel@carel.com

Cap. Soc. € 10.000.000 i.v.
C.C.I.A.A. Padova Reg. Imp n. 4359090281
Part. IVA e Cod. Fisc. 04359090281
Società soggetta ad attività di direzione e coordinamento di Carel S.p.A.

CE

EU Declaration of Conformity

Manufacturer: **CAREL Industries S.p.A.**
Via dell'Industria, 11 35020 Brugine (PD) Italy

Electric Control Panels series Carel Power Solutions
Code :
Serial number:

CM00009387 / CM00009566

The manufacturer declares that all the above indicated products are in accordance with the EU Directives:

2006/95/EC (LVD)

and comply with the requirements of the following European standards:

EN 60204-1

Brugine, 01/09/2015

CAREL INDUSTRIES S.p.A.
Technical Director

Ing. Umberto Bianchini

Modification	Date	Name		Date	02/02/2015	CM00009387
				Elab.	Franco Meneghetti	EP 12 FANS ALFA-LUVE

ALFA LU-VE

Certificazione

Function	=	Mounting locations	+ QE	Page	+QE/16
				Next	=REP1+/1,0
Total pages	37				

Multicore cables scheme

Cable type PROBE CABLE

Oracle code PROBE CABLE

Total Cable Length Cut:

Departure | Cross ref. | Terminator

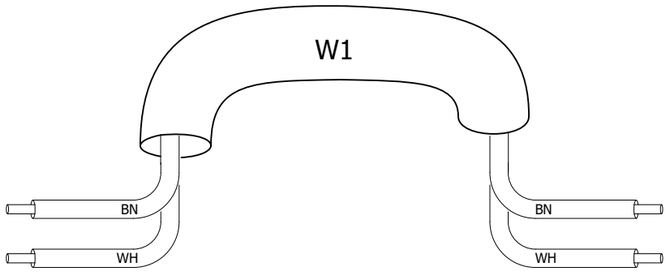

Terminator | Cross ref. | Arrival

Unsheathing cable departure

Unsheathing cable arrival

			Date	02/02/2015	CM00009387	Multicore cables scheme	Mounting locations +
			Elab.	Franco Meneghetti	EP 12 FANS ALFA-LUVE		Function =REP1
Modification	Date	Name					

ALFA LU-VE

Page	=REP1/1,0
Next	1,1
Total pages	37

Multicore cables scheme

Cable type Belden

Oracle code 1008176AXX

Total Cable Length Cut:

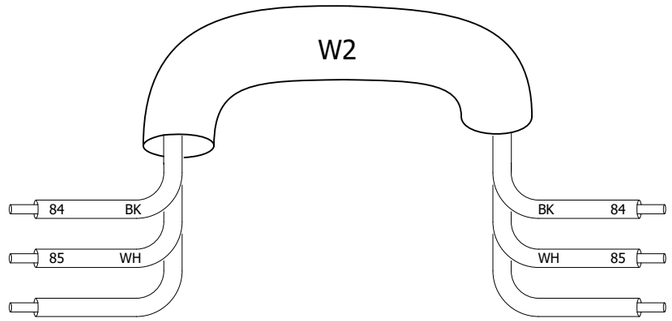

Departure	Cross ref.	Terminator	Terminator	Cross ref.	Arrival
XA1:107:A	+QE/8.8:H			+QE/8.8:B	+QE-AP1:J8 FIELD-BUS:Tx/Rx -
XA1:108:B	+QE/8.8:H			+QE/8.8:B	+QE-AP1:J8 FIELD-BUS:Tx/Rx +

Unsheathing cable departure

Unsheathing cable arrival

			Date	02/02/2015
			Elab.	Franco Meneghetti
Modification	Date	Name		

CM00009387

EP 12 FANS ALFA-LUVE

ALFA LU-VE

Multicore cables scheme

Mounting locations +

Function =REP1

Page =REP1/1,1

Next 1,2

Total pages 37

Multicore cables scheme

Carel STD-V2

Cable type Shielded 3x0.5

Oracle code 1008019AXX

Total Cable Length Cut:

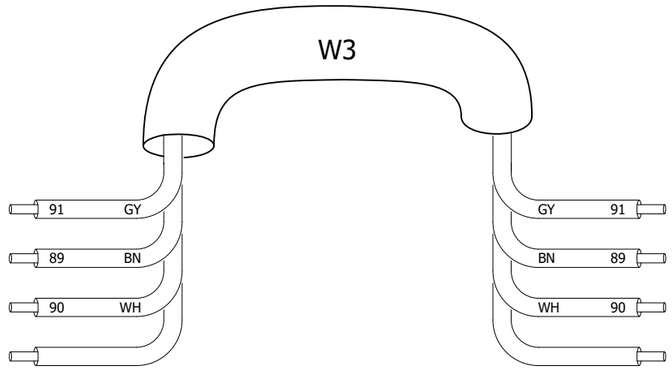

Departure	Cross ref.	Terminator	Terminator	Cross ref.	Arrival
XA1:103:A	+QE/9.6:H			+QE/9.6:C	+QE-AP3:J1:GND
XA1:101:A	+QE/9.7:H			+QE/9.7:C	+QE-AP3:J1:RX-/TX-
XA1:102:B	+QE/9.6:H			+QE/9.6:C	+QE-AP3:J1:RX+/TX+
XA1:PE:B	+QE/9.5:H			+QE/9.5:E	W3

Unsheathing cable departure

Unsheathing cable arrival

			Date	02/02/2015	CM00009387	ALFA LU-VE	Multicore cables scheme	Mounting locations +	Page =REP1/1,2
			Elab.	Franco Meneghetti	EP 12 FANS ALFA-LUVE				Next 1,3
								Function =REP1	Total pages 37
Modification	Date	Name							

Multicore cables scheme

Carel STD-V2

Cable type Shielded 3x0.5

Oracle code 1008019AXX

Total Cable Length Cut:

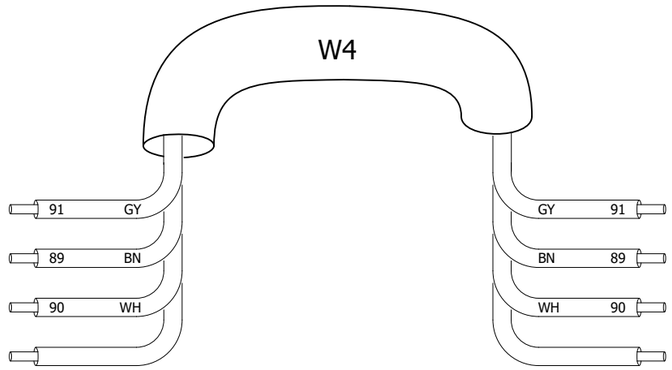

Departure	Cross ref.	Terminator	Terminator	Cross ref.	Arrival
XA1:106:B	+QE/9.8:H			+QE/9.6:C	+QE-AP3:J1:GND
XA1:104:B	+QE/9.8:H			+QE/9.7:C	+QE-AP3:J1:RX-/TX-
XA1:105:A	+QE/9.8:H			+QE/9.6:C	+QE-AP3:J1:RX+/TX+
XA1:PE:A	+QE/9.7:H			+QE/9.7:E	W4

Unsheathing cable departure

Unsheathing cable arrival

			Date	02/02/2015	CM00009387	ALFA LU-VE	Multicore cables scheme	Mounting locations +	Page =REP1/1,3
			Elab.	Franco Meneghetti	EP 12 FANS ALFA-LUVE				Next 2,0
								Function =REP1	Total pages 37
Modification	Date	Name							

Terminal diagram

Terminal strip

XA1

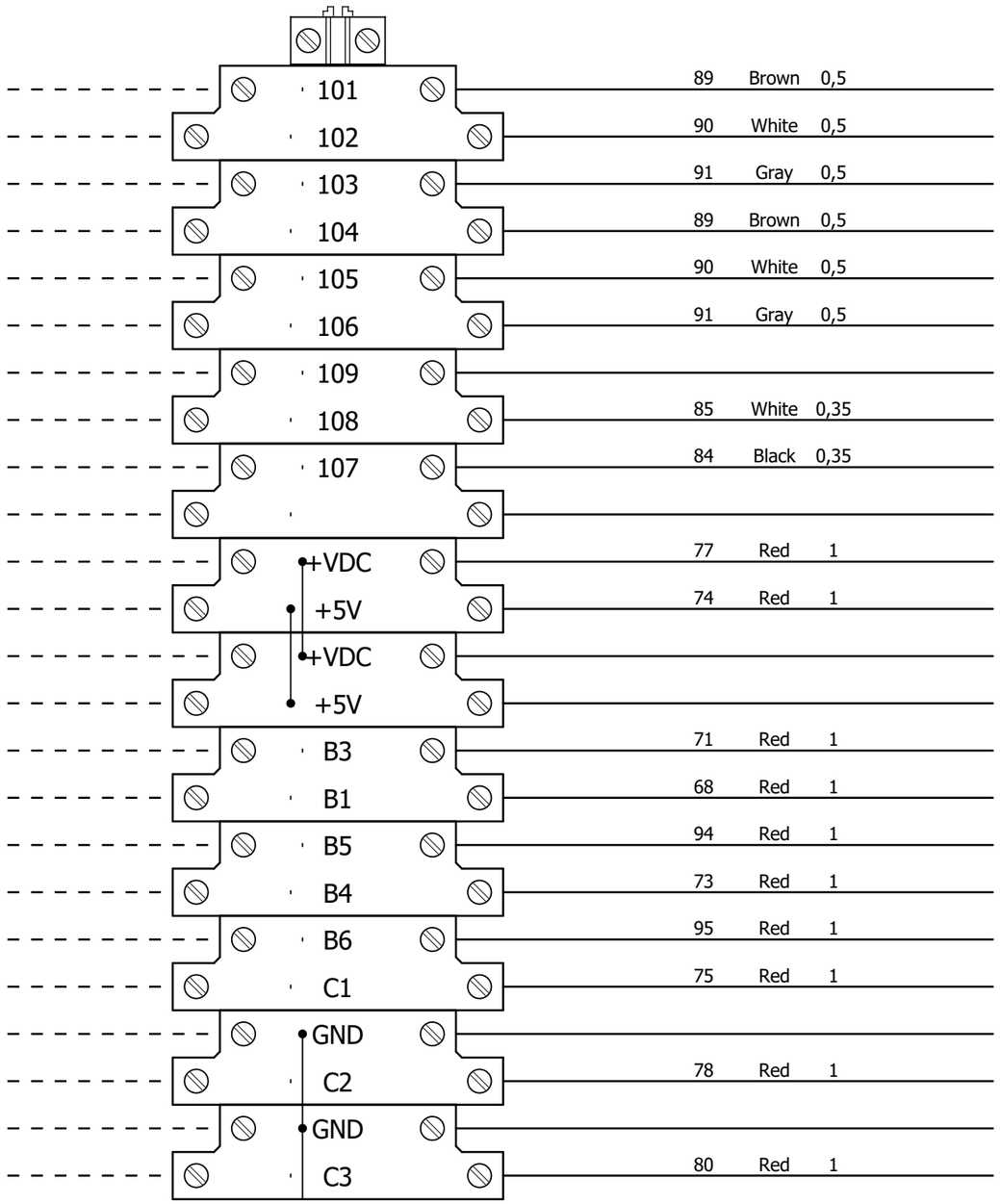

External targets	Teminal type	Terminal position on the drawings
	STTB 2,5	+QE/9.7:H
		+QE/9.6:H
	STTB 2,5	+QE/9.6:H
		+QE/9.8:H
	STTB 2,5	+QE/9.8:H
		+QE/9.8:H
	STTB 2,5	+QE/8.8:H
		+QE/8.8:H
	STTB 2,5	+QE/8.8:H
		+QE/8.9:H
	STTB 2,5	+QE/6.7:H
		+QE/6.7:H
	STTB 2,5	+QE/6.8:H
		+QE/6.7:H
	STTB 2,5	+QE/6.3:H
		+QE/6.2:H
	STTB 2,5	+QE/6.5:H
		+QE/6.4:H
	STTB 2,5	+QE/6.5:H
		+QE/5.4:H
	STTB 2,5	+QE/6.2:H
		+QE/5.8:H
	STTB 2,5	+QE/6.3:H
		+QE/7.1:H

Terminal diagram

Terminal strip

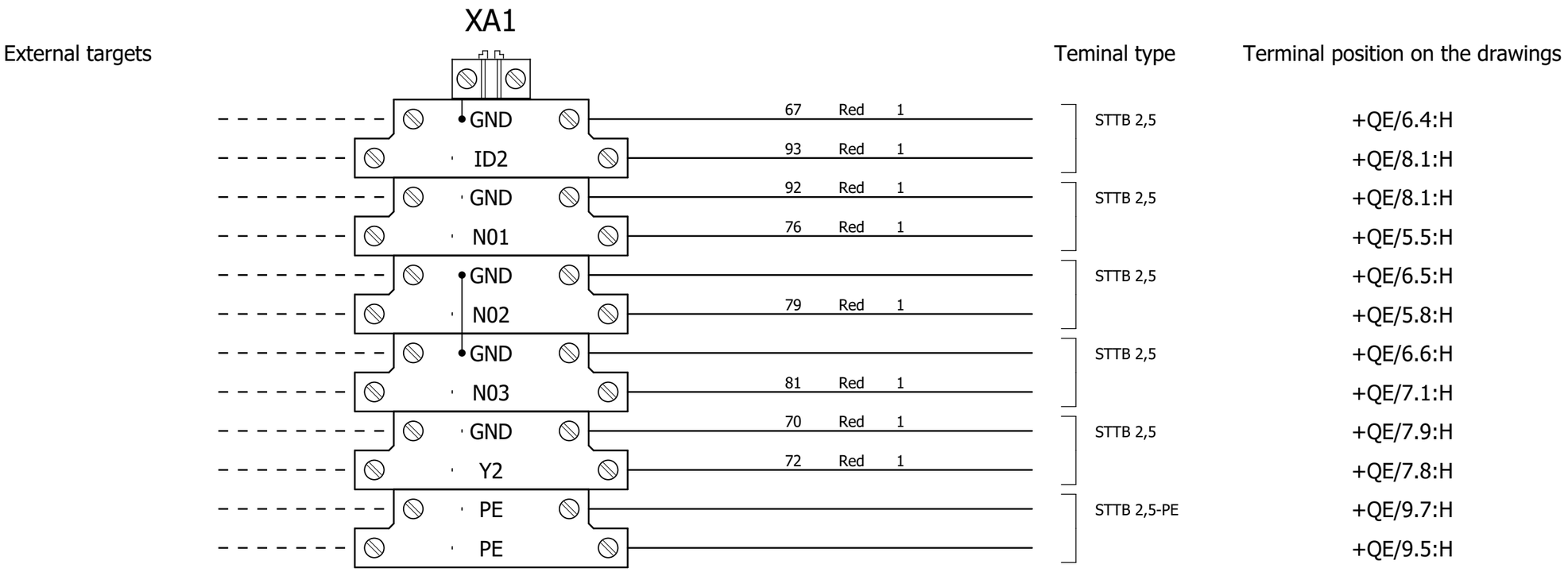

			Date	02/02/2015	CM00009387	ALFA LU-VE	Terminal strip	Mounting locations +	Page =REP1/2,0.a
			Elab.	Franco Meneghetti	EP 12 FANS ALFA-LUVE				Next 2,1
								Function =REP1	Total pages 37
Modification	Date	Name							

Terminal diagram

Terminal strip

XA2

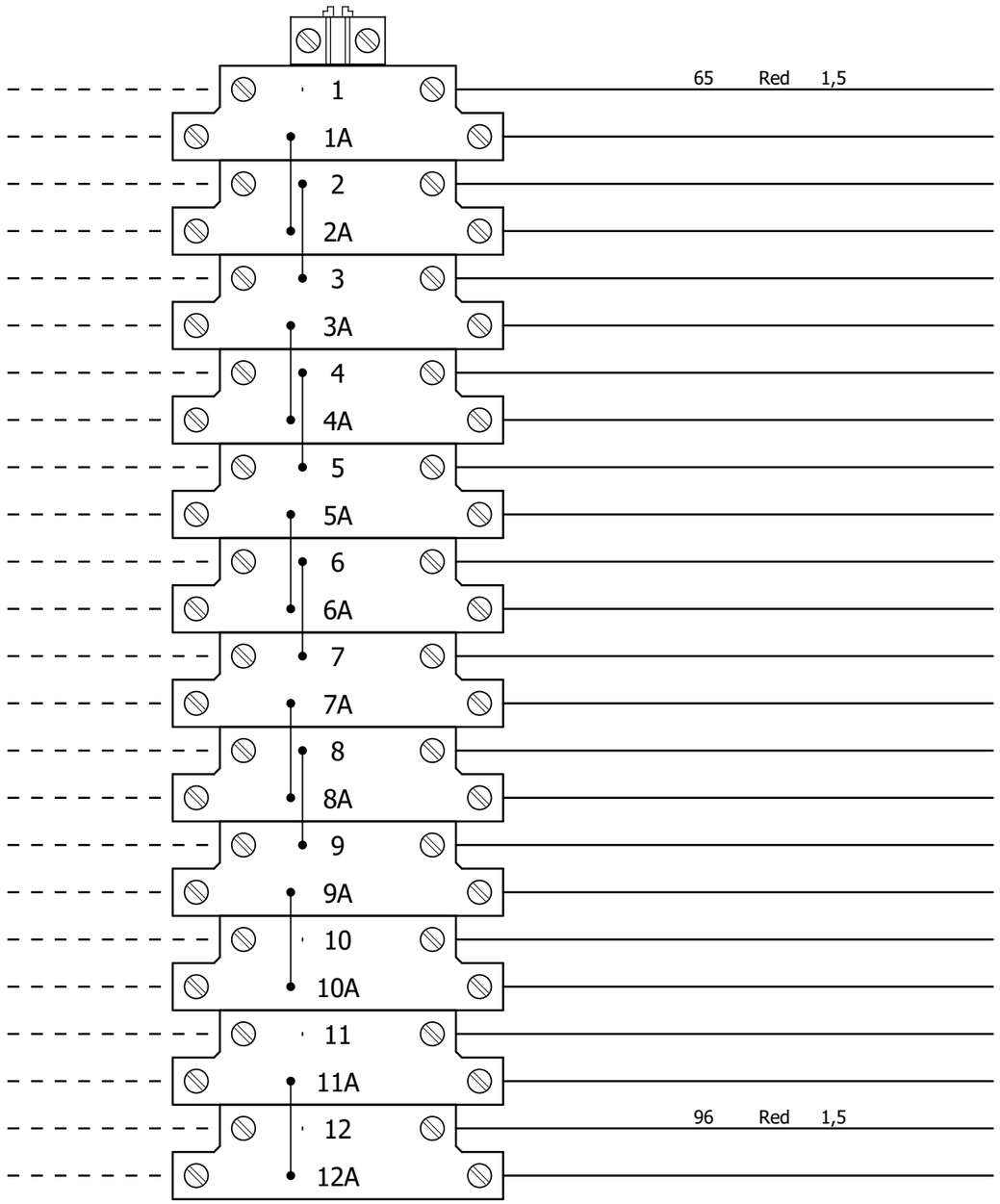

External targets	Teminal type	Terminal position on the drawings
	STTB 2,5	+QE/10.0:H
		+QE/10.1:H
	STTB 2,5	+QE/10.1:H
		+QE/10.1:H
	STTB 2,5	+QE/10.2:H
		+QE/10.2:H
	STTB 2,5	+QE/10.3:H
		+QE/10.3:H
	STTB 2,5	+QE/10.3:H
		+QE/10.4:H
	STTB 2,5	+QE/10.4:H
		+QE/10.4:H
	STTB 2,5	+QE/10.5:H
		+QE/10.5:H
	STTB 2,5	+QE/10.6:H
		+QE/10.6:H
	STTB 2,5	+QE/10.6:H
		+QE/10.7:H
	STTB 2,5	+QE/10.7:H
		+QE/10.8:H
	STTB 2,5	+QE/11.0:H
		+QE/11.1:H
	STTB 2,5	+QE/11.1:H
		+QE/11.1:H

BOM internal panel

InternoQE_F01_003

Short name	Designation	Function text	Position	Manufacturer	Component tipe	Oracle code
?AP2	Damping magnet, M 5.0	FERRITE 2 SPIRE	=+QE/5.1:D	KE-KITAGAWA	FERRITE CORE	0907877AXX
?HL1	Green indicator plate	POWER ON	=+QE/5.1:F	EATON ELECTRIC	M22-L-G	0505187AXX
?HL1	Plate	=	=+QE/5.1:F	CEMBRE	15X27	1800243AXX
?HL1	Support plate	=	=+QE/5.1:F	CEMBRE	D22 17X30	1800242AXX
?HL1	Glass plate	=	=+QE/5.1:F	CEMBRE	15X27	1800244AXX
?HL1	Support	=	=+QE/5.1:F	EATON ELECTRIC	M22-A	0505184AXX
?HL1	Green lap 24Vac	=	=+QE/5.1:F	EATON ELECTRIC	M22-LED-G	0505101CEL
AP1	Programmable control		=+QE/5.0:A	CAREL	PCO Compact	PCOXLV0DB0
AP2	Damping magnet, M 5.0		(Quadro elettri co)	KE-KITAGAWA	FERRITE CORE	0907877AXX
AP3	Scheda seriale BMS		=+QE/9.6:B	CAREL	Scheda seriale BMS	PCOS004850
AP3	Ethernet card		(Quadro elettri co)	CAREL	PCOWEB ETHERNET CARD	PCO1000WD0
E1	Earth terminal	GROUND BAR	=+QE/1.2:D	SCHNEIDER ELECTRIC	14977	2217096CEL
HL1	White lamp 24Vac		(Quadro elettri co)	EATON ELECTRIC	M22-LED-W	0505103CEL
KR1	Relay	ALARM RELAY	=+QE/10.1:E	FINDER	40.52.8.230.0000	0100751CEL
KR1	Base element	=	=+QE/10.1:E	FINDER	95.05	5931384AXX
M1	Internal fan	EXTRACTOR	=+QE/7.5:F	EZM	150x150	1312697AXX
PE	GROUND		=+QE/1.0:G		PE	PE
PE1	GROUND		=+QE/1.1:H		PE	PE
PE2	GROUND		=+QE/1.2:H		PE	PE
PE3	GROUND		=+QE/1.3:H		PE	PE
PE4	GROUND		=+QE/4.4:H		PE	PE
PE5	GROUND		=+QE/7.5:G		PE	PE
QF1	Power circuit breaker	PROTECTION 1	=+QE/1.4:C	EATON ELECTRIC	FAZ6-C10/3	0403856CEL

BOM internal panel

InternoQE_F01_003

Short name	Designation	Function text	Position	Manufacturer	Component tipe	Oracle code
QF2	Power circuit breaker	PROTECTION 2	=+QE/1.6:C	EATON ELECTRIC	FAZ6-C10/3	0403856CEL
QF3	Power circuit breaker	PROTECTION 3	=+QE/1.8:C	EATON ELECTRIC	FAZ6-C10/3	0403856CEL
QF4	Power circuit breaker	PROTECTION 4	=+QE/2.1:C	EATON ELECTRIC	FAZ6-C10/3	0403856CEL
QF5	Power circuit breaker	PROTECTION 5	=+QE/2.3:C	EATON ELECTRIC	FAZ6-C10/3	0403856CEL
QF6	Power circuit breaker	PROTECTION 6	=+QE/2.4:C	EATON ELECTRIC	FAZ6-C10/3	0403856CEL
QF7	Power circuit breaker	PROTECTION 7	=+QE/2.6:C	EATON ELECTRIC	FAZ6-C10/3	0403856CEL
QF8	Power circuit breaker	PROTECTION 8	=+QE/2.8:C	EATON ELECTRIC	FAZ6-C10/3	0403856CEL
QF9	Power circuit breaker	PROTECTION 9	=+QE/3.1:C	EATON ELECTRIC	FAZ6-C10/3	0403856CEL
QF10	Power circuit breaker	PROTECTION 10	=+QE/3.3:C	EATON ELECTRIC	FAZ6-C10/3	0403856CEL
QF11	Power circuit breaker	PROTECTION 11	=+QE/3.4:C	EATON ELECTRIC	FAZ6-C10/3	0403856CEL
QF12	Power circuit breaker	PROTECTION 12	=+QE/3.6:C	EATON ELECTRIC	FAZ6-C10/3	0403856CEL
QF21	Power circuit breaker	TRANSFORMER PROTECTION	=+QE/4.2:B	EATON ELECTRIC	FAZ6-C4/2	0403468AXX
QF22	Power circuit breaker	SECONDARY PROTECTION 24V	=+QE/4.2:G	EATON ELECTRIC	FAZ6-C4/1	0403824AXX
QF23	Power circuit breaker	230V SECONDARY PROTECTION	=+QE/4.3:G	EATON ELECTRIC	FAZ6-C2/1	0403819AXX
QS1	Disconnect switch	MAIN SWITCH	=+QE/1.1:E	SOCOMEC	Sirco M80	0402331AXX
QS1	Operation	=	=+QE/1.1:E	SOCOMEC	Y/R 16-80A	0402333AXX
RR1	Scaldiglia 200W 230V	HEATER E.P.	=+QE/7.4:D	EZM	091187	5729759AXX
ST1	SENSOR NTC WH IP68 -50T105 CABLE 1,5M	CABINET TEMPERATURE	=+QE/6.3:E	CAREL	NTC015WH01	NTC015WH01
TC1	TRANSFORMER	TRANSFORMER	=+QE/4.2:D		400V-230V 310VA//24V 60AV - 230V 250VA	0910244AXX

BOM external panel

EsternoQE_F01_003

Place	Short name	Function text	Position	Technical characteristics
+EXT	M1.1	Fan	=+QE/1.4:I	
+EXT	M1.2	=	=+QE/2.6:I	
+EXT	M2.1	=	=+QE/1.6:I	
+EXT	M2.2	=	=+QE/2.8:I	
+EXT	M3.1	=	=+QE/1.8:I	
+EXT	M3.2	=	=+QE/3.1:I	
+EXT	M4.1	=	=+QE/2.1:I	
+EXT	M4.2	=	=+QE/3.3:I	
+EXT	M5.1	=	=+QE/2.3:I	
+EXT	M5.2	=	=+QE/3.4:I	
+EXT	M6.1	=	=+QE/2.4:I	
+EXT	M6.2	=	=+QE/3.6:I	
+EXT	ST1	SIGNAL FOR FANS	=+QE/6.2:I	
+EXT	ST2	EXTERNAL AIR TEMP	=+QE/6.3:I	
+EXT	ST3	SIGNAL FOR FANS REGULATOR	=+QE/6.4:I	

alfa.luvegroup.com

Product code	CM00009388	Rev	7
Project description	EP 14 FANS ALFA-LUVE		

Supply voltage	3P+N+E - 400V - 50Hz	Operating temperature	40°C
Rated current	80A Icc 6KA		
Auxiliary voltage	24Vac/230Vac		

Designed by	Franco Meneghetti	on	30/01/2015
Checked by	Mattia Bortolotto	on	10/12/2015
Approved by	Luca Tessaro	on	10/12/2015

NOT ALLOWED DELIVER TO THIRD PARTIES OR REPRODUCE THIS DOCUMENT NOT USE THE CONTENT OR OTHERWISE MAKE KNOWN TO THIRD PARTIES WITHOUT OUR EXPRESS PERMISSION. ANY INFRINGEMENT WILL RESULT IN DAMAGES SUFFERED. And it MADE SUBJECT TO ALL RIGHTS UNDER PATENTS OR MODELS

Cables Range

Cross-sect	N07V-K Range (A)	N07G9 Range (A)
0,5	\	NOT AVAILABLE
0,75	\	NOT AVAILABLE
1	8A	12A
1,5	11A	16A
2,5	15A	22.4A
4	20A	29.6A
6	26A	38.4A
10	36A	52.8A
16	48A	70.4A
25	64A	93.6A
35	80A	115.2A
50	95A	140A
95	150A	177.6A
120	170A	215.2A
150	195A	NOT AVAILABLE
185	220A	NOT AVAILABLE
240	260A	NOT AVAILABLE
300	300A	NOT AVAILABLE

Colors Table

Colors	Short name
Red	RD
Black	BK
Yellow	YE
Yellow\Green	GNYE
Orange	OG
Light blue	TQ
Blue	BU
Pink	PK
White	WH
Gray	GY
Brown	BN
Green	GN
Purple	VT
\	
\	
\	
\	

REVIEW TABLE

Rev.	Technical name	Date	Note
01	FRANCO MENEGHETTI	17/03/2015	- -
02	FRANCO MENEGHETTI	01/07/2015	- -
03	FRANCO MENEGHETTI	10/12/2015	- -
04	FRANCO MENEGHETTI	09/02/2016	- -
05	FRANCO MENEGHETTI	21/06/2017	- -
06	LUCA QUAGGIA	18/12/2018	- -
07	LUCA QUAGGIA	10/09/2019	- -

Table of contents

F06_003

Page	Page type	Page description	Date	Edited by
/1	Title page / cover sheet	Title page	03/02/2020	Luca Quaggia
/2	Pre-planning	Technical information	03/02/2020	Luca Quaggia
/3	Table of contents	Table of contents	03/02/2020	Luca Quaggia
/4	Model view	General view	03/02/2020	Luca Quaggia
/5	Model view	View of all sides	03/02/2020	Luca Quaggia
/6	Model view	Mounting plate view	03/02/2020	Luca Quaggia
/7	Model view	Door view	03/02/2020	Luca Quaggia
/8	Model view	Guides view	03/02/2020	Luca Quaggia
/9	Model view	Channels view	03/02/2020	Luca Quaggia
/10	Model view	Bottom view	03/02/2020	Luca Quaggia
+QE/1	Schematic multi-line	Power circuit	03/02/2020	Luca Quaggia
+QE/2	Schematic multi-line	Power circuit	03/02/2020	Luca Quaggia
+QE/3	Schematic multi-line	Power circuit	03/02/2020	Luca Quaggia
+QE/4	Schematic multi-line	Power circuit	03/02/2020	Luca Quaggia
+QE/5	Schematic multi-line	Power circuit	03/02/2020	Luca Quaggia
+QE/6	Schematic multi-line	Auxiliary circuit	03/02/2020	Luca Quaggia
+QE/7	Schematic multi-line	Auxiliary circuit	03/02/2020	Luca Quaggia
+QE/7.a	Schematic multi-line	Auxiliary circuit	03/02/2020	Luca Quaggia
+QE/8	Schematic multi-line	Auxiliary circuit	03/02/2020	Luca Quaggia
+QE/9	Schematic multi-line	Auxiliary circuit	03/02/2020	Luca Quaggia
+QE/10	Schematic multi-line	Auxiliary circuit	03/02/2020	Luca Quaggia
+QE/11	Schematic multi-line	Auxiliary circuit	03/02/2020	Luca Quaggia
+QE/12	Schematic multi-line	Auxiliary circuit	03/02/2020	Luca Quaggia
+QE/13	Schematic multi-line	Auxiliary circuit	03/02/2020	Luca Quaggia
+QE/14	Schematic multi-line	Auxiliary circuit	03/02/2020	Luca Quaggia
+QE/15	Schematic multi-line	Auxiliary circuit	03/02/2020	Luca Quaggia
+QE/17	Graphic	Serial connection	03/02/2020	Luca Quaggia
+QE/18	Graphic	Certificazione	03/02/2020	Luca Quaggia
=REP1/1,0	Cable diagram	Multicore cables scheme	03/02/2020	Luca Quaggia
=REP1/1,1	Cable diagram	Multicore cables scheme	03/02/2020	Luca Quaggia
=REP1/1,2	Cable diagram	Multicore cables scheme	03/02/2020	Luca Quaggia
=REP1/1,3	Cable diagram	Multicore cables scheme	03/02/2020	Luca Quaggia
=REP1/2,0	Terminal diagram	Terminal strip	03/02/2020	Luca Quaggia
=REP1/2,0.a	Terminal diagram	Terminal strip	03/02/2020	Luca Quaggia
=REP1/2,1	Terminal diagram	Terminal strip	03/02/2020	Luca Quaggia
=REP1/2,1.a	Terminal diagram	Terminal strip	03/02/2020	Luca Quaggia
=REP1/3,0	Parts list	BOM internal panel	03/02/2020	Luca Quaggia
=REP1/3,0.a	Parts list	BOM internal panel	03/02/2020	Luca Quaggia
=REP1/4,0	Parts list	BOM external panel	03/02/2020	Luca Quaggia

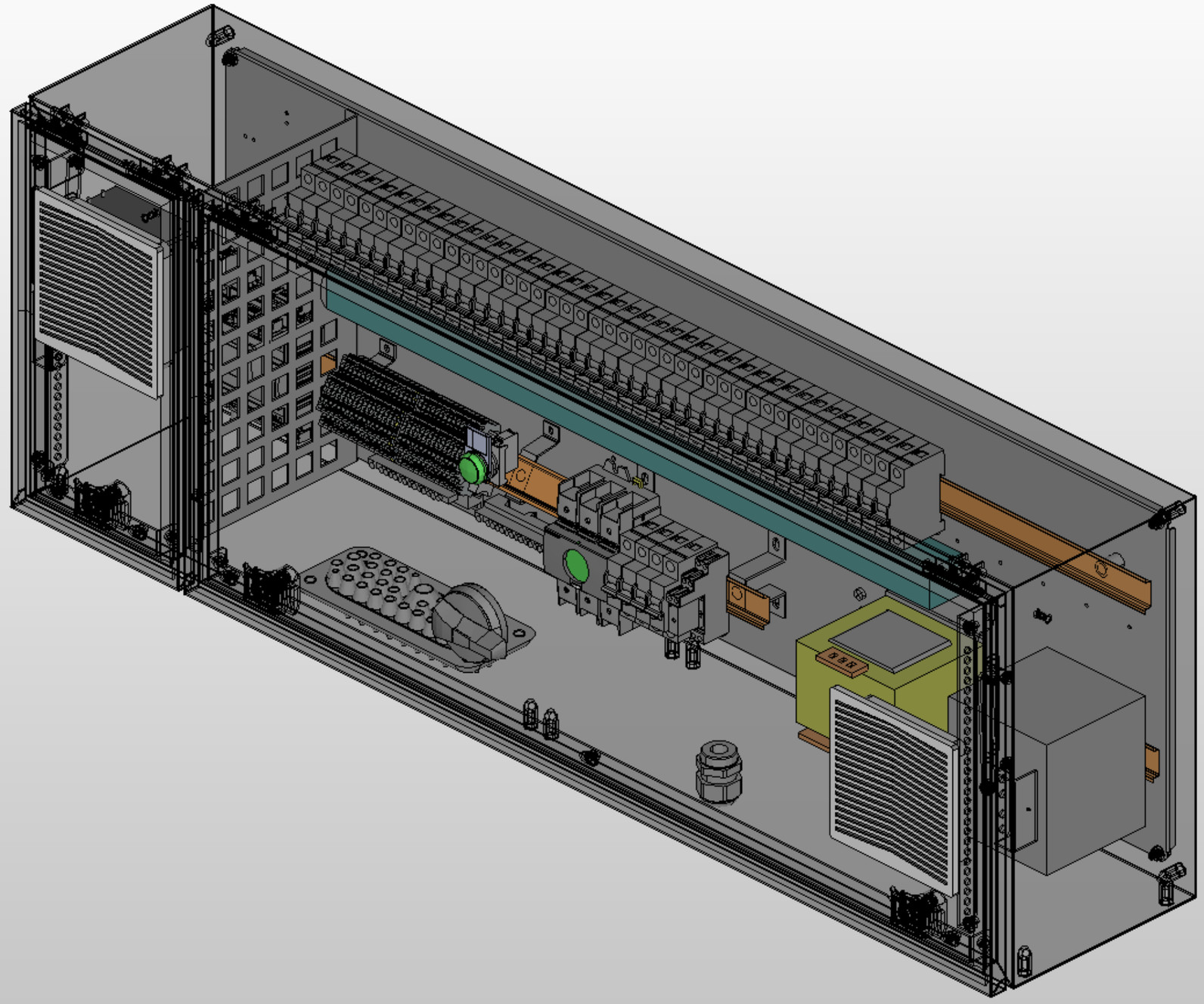

			Date	30/01/2015	CM00009388	ALFA LU-VE	General view	Mounting locations +	Page /4
			Elab.	Franco Meneghetti	EP 14 FANS ALFA-LUVE				Next 5
								Function =	Total pages 39
Modification	Date	Name							

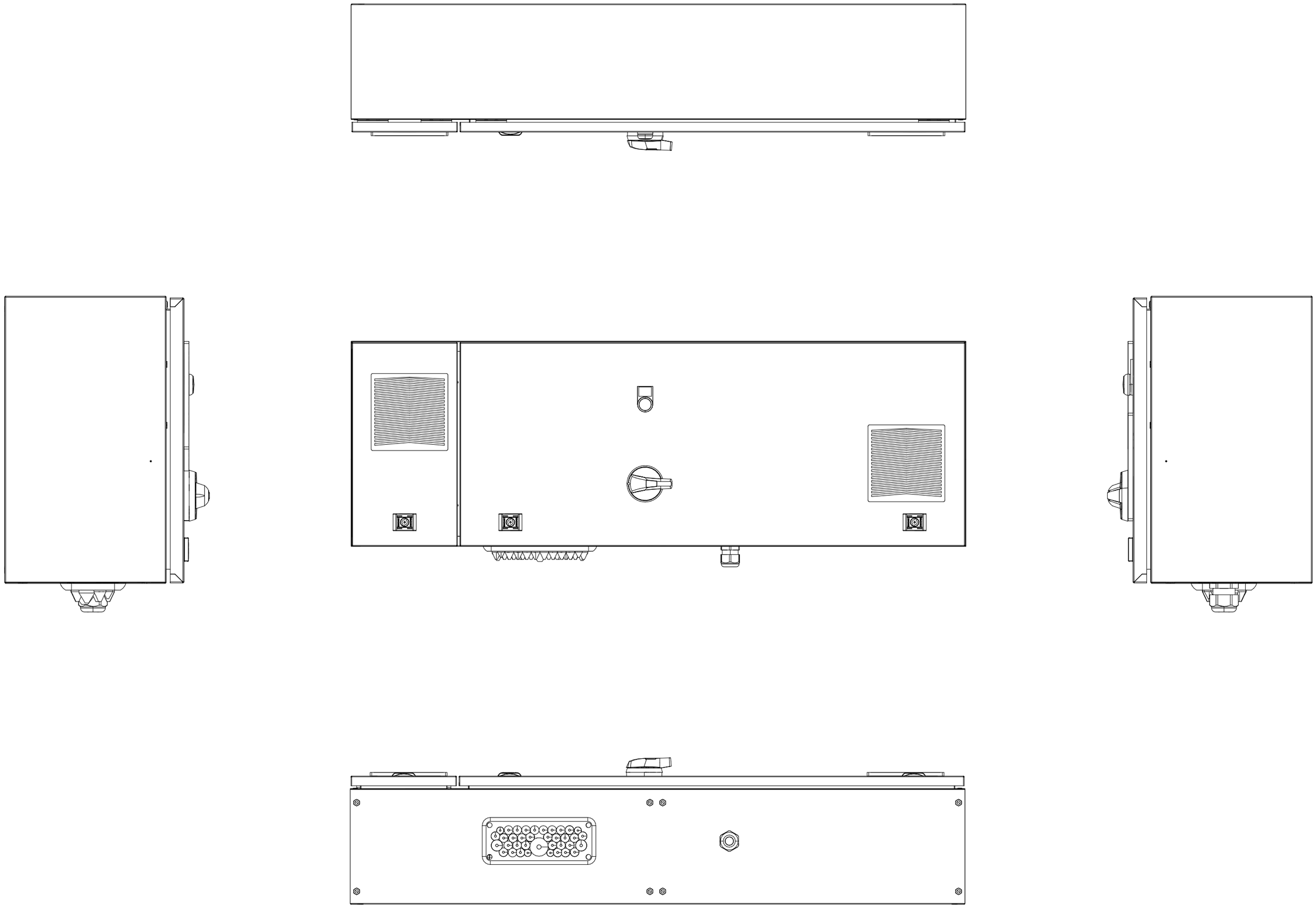

			Date	30/01/2015	CM00009388	ALFA LU-VE	View of all sides	Mounting locations +	Page /5
			Elab.	Franco Meneghetti	EP 14 FANS ALFA-LUVE				Next 6
								Function =	Total pages 39
Modification	Date	Name							

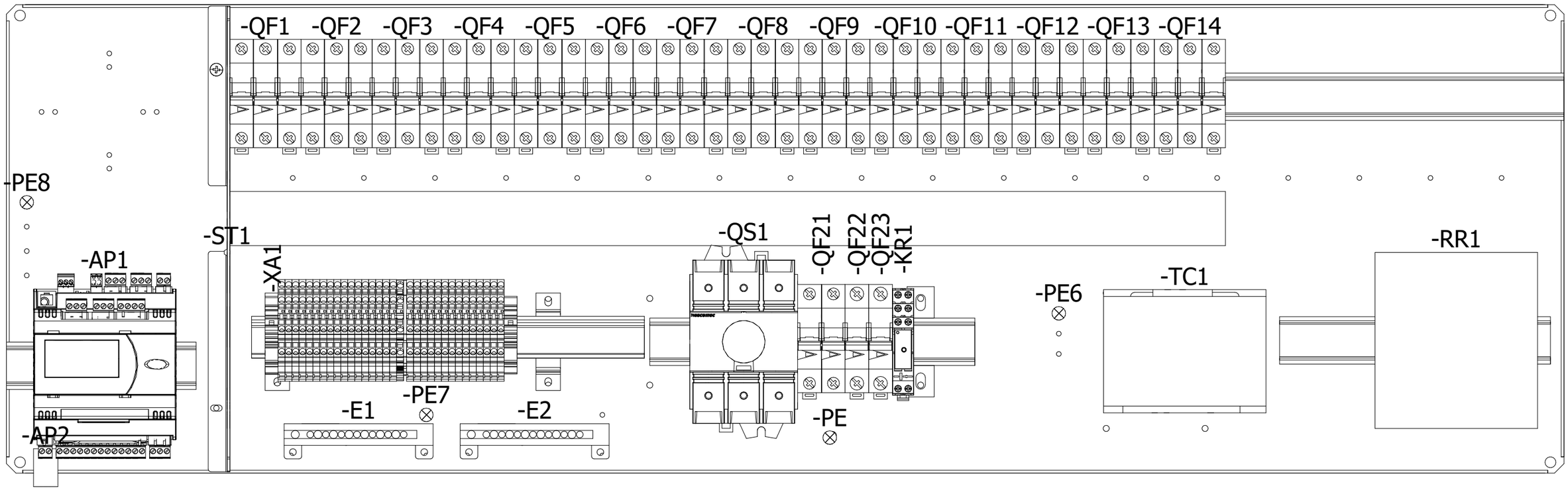

			Date	30/01/2015	CM00009388	ALFA LU-VE	Mounting plate view	Mounting locations +	Page /6
			Elab.	Franco Meneghetti	EP 14 FANS ALFA-LUVE				Next 7
								Function =	Total pages 39
Modification	Date	Name							

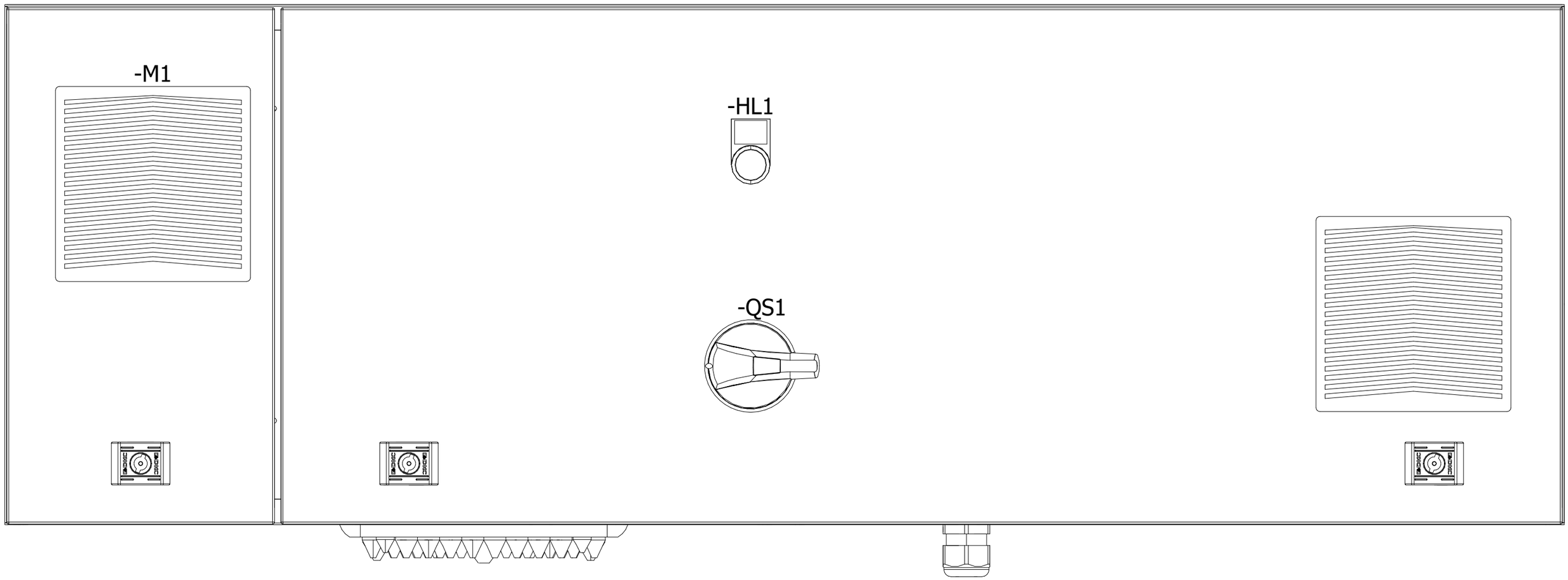

			Date	30/01/2015	CM00009388	ALFA LU-VE	Door view	Mounting locations +	Page /7
			Elab.	Franco Meneghetti	EP 14 FANS ALFA-LUVE			Function =	Next 8
									Total pages 39
Modification	Date	Name							

Layout guides and channels

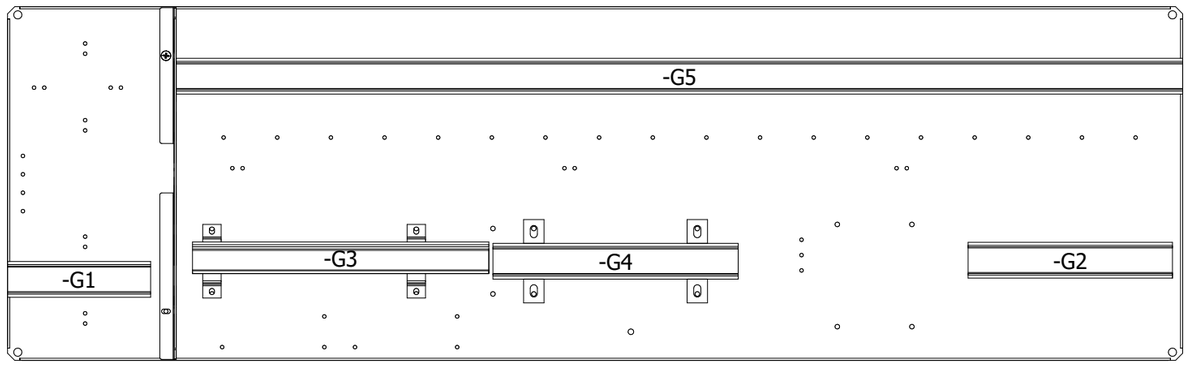

Sign	Type	Length (Tollerance -5mm)
U1	Inclined Bracket	
U2	Inclined Bracket	

G2	35x7.5	200 mm
G1	35x7.5	140 mm
G3	35x7.5	290 mm
G5	35x7.5	970 mm
G4	35x7.5	240 mm

U3	Staffa H=50mm	
U4	Staffa H=50mm	

U5	2cm Rise	
U6	2cm Rise	
U7	2cm Rise	

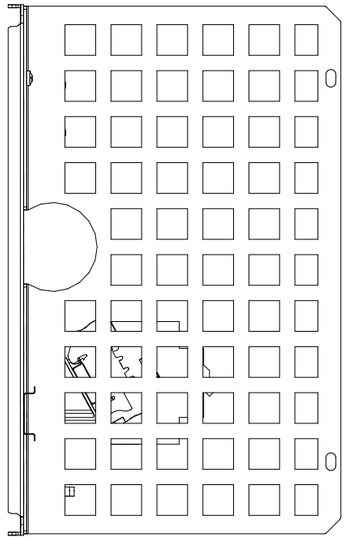

Empty

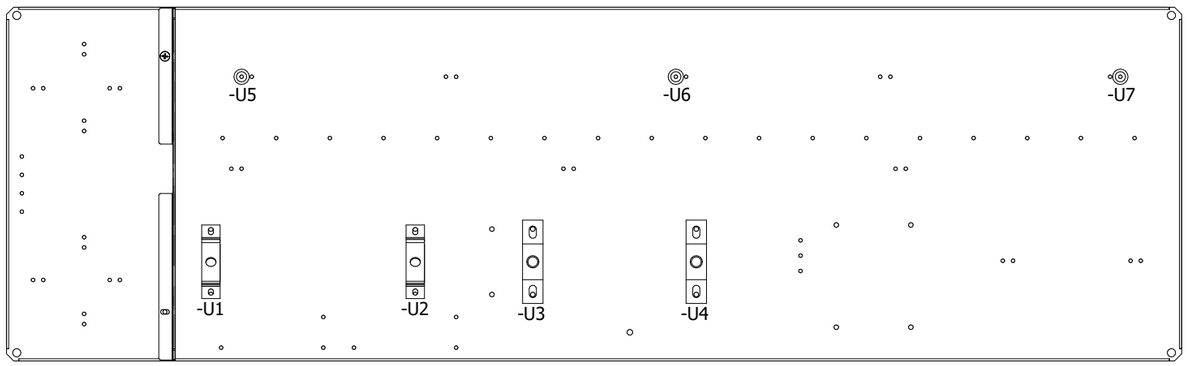

Empty

			Date	30/01/2015
			Elab.	Franco Meneghetti
Modification	Date	Name		

CM00009388

EP 14 FANS ALFA-LUVE

ALFA LU-VE

Guides view

Mounting locations +

Function =

Page /8

Next 9

Total pages 39

Layout guides and channels

Sign	Type	Length (Tollerance -5mm)
C1	40X40	720 mm

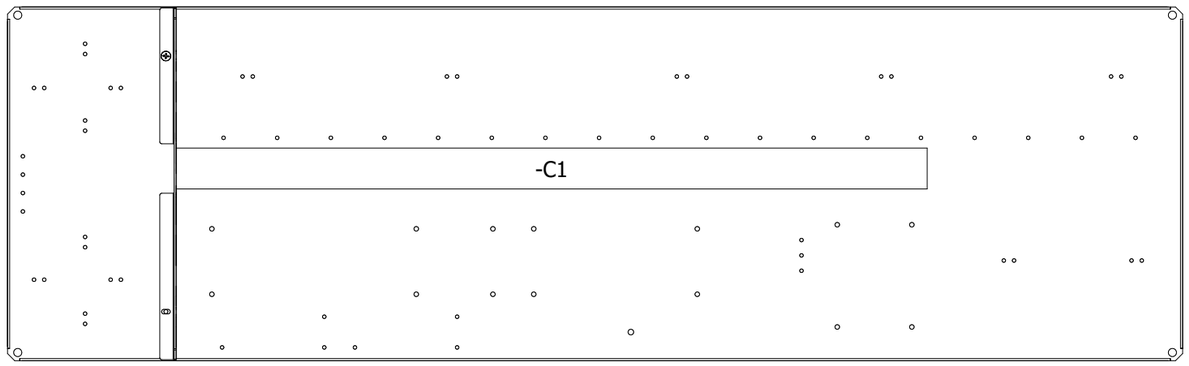

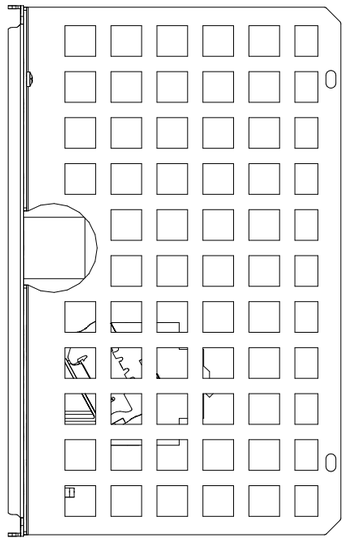

			Date	30/01/2015
			Elab.	Franco Meneghetti
Modification	Date	Name		

CM00009388

EP 14 FANS ALFA-LUVE

ALFA LU-VE

Channels view

Mounting locations +

Function =

Page /9

Next 10

Total pages 39

Cable entry/exit components

Item number	Component tipe	Drilling (Tollerance +-0.5mm)
1	M32 Gland	Ø 32.5mm
2	Multi-cable gland	

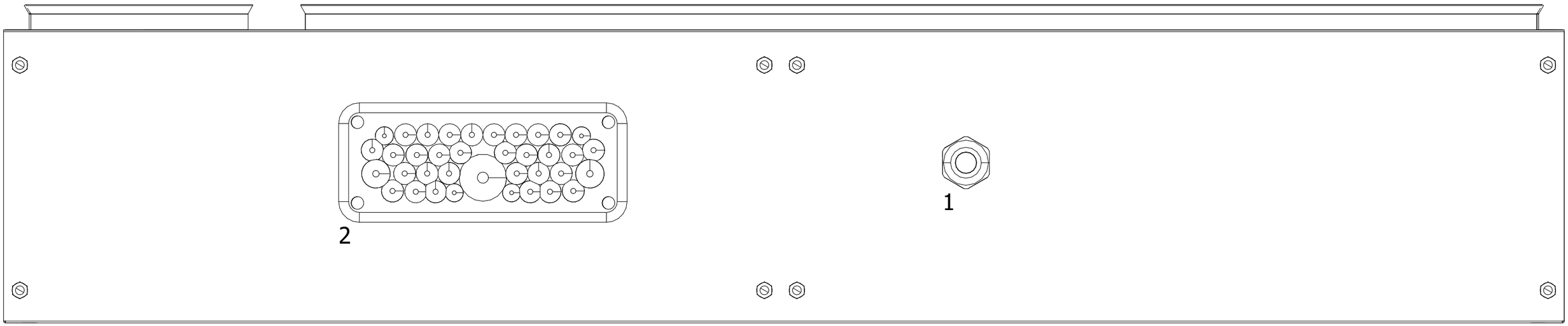

			Date	30/01/2015	CM00009388	ALFA LU-VE	Bottom view	Mounting locations +	Page /10
			Elab.	Franco Meneghetti	EP 14 FANS ALFA-LUVE				Next +QE/1
								Function =	Total pages 39
Modification	Date	Name							

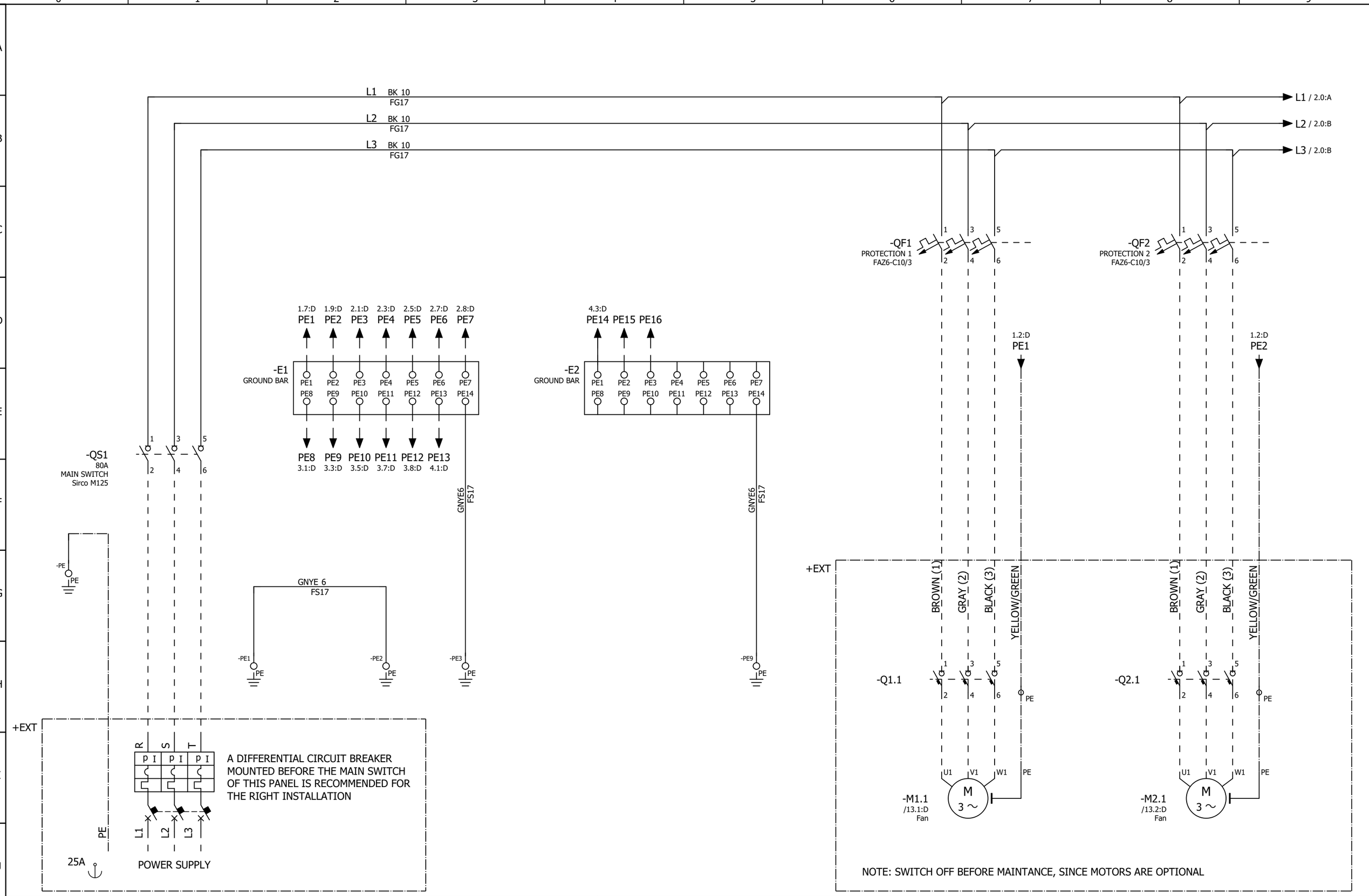

			Date	30/01/2015	CM00009388	ALFA LU-VE	Power circuit	Mounting locations + QE	Page +QE/1
			Elab.	Franco Meneghetti	EP 14 FANS ALFA-LUVE			Function =	Next 2
Modification	Date	Name							Total pages 39

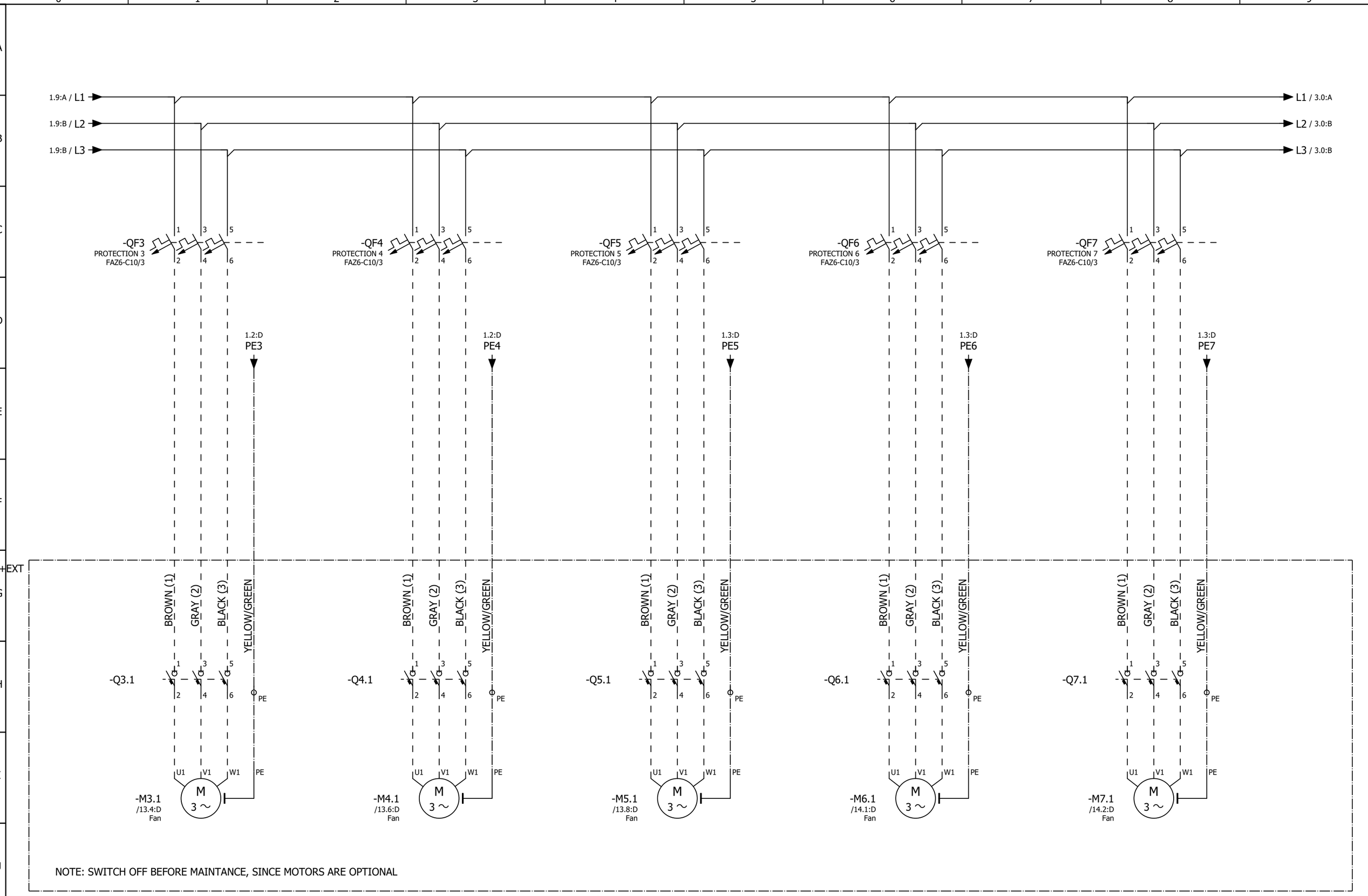

			Date	30/01/2015
			Elab.	Franco Meneghetti
Modification	Date	Name		

CM00009388

EP 14 FANS ALFA-LUVE

ALFA LU-VE

Power circuit

Mounting locations + QE

Function =

Page +QE/2

Next 3

Total pages 39

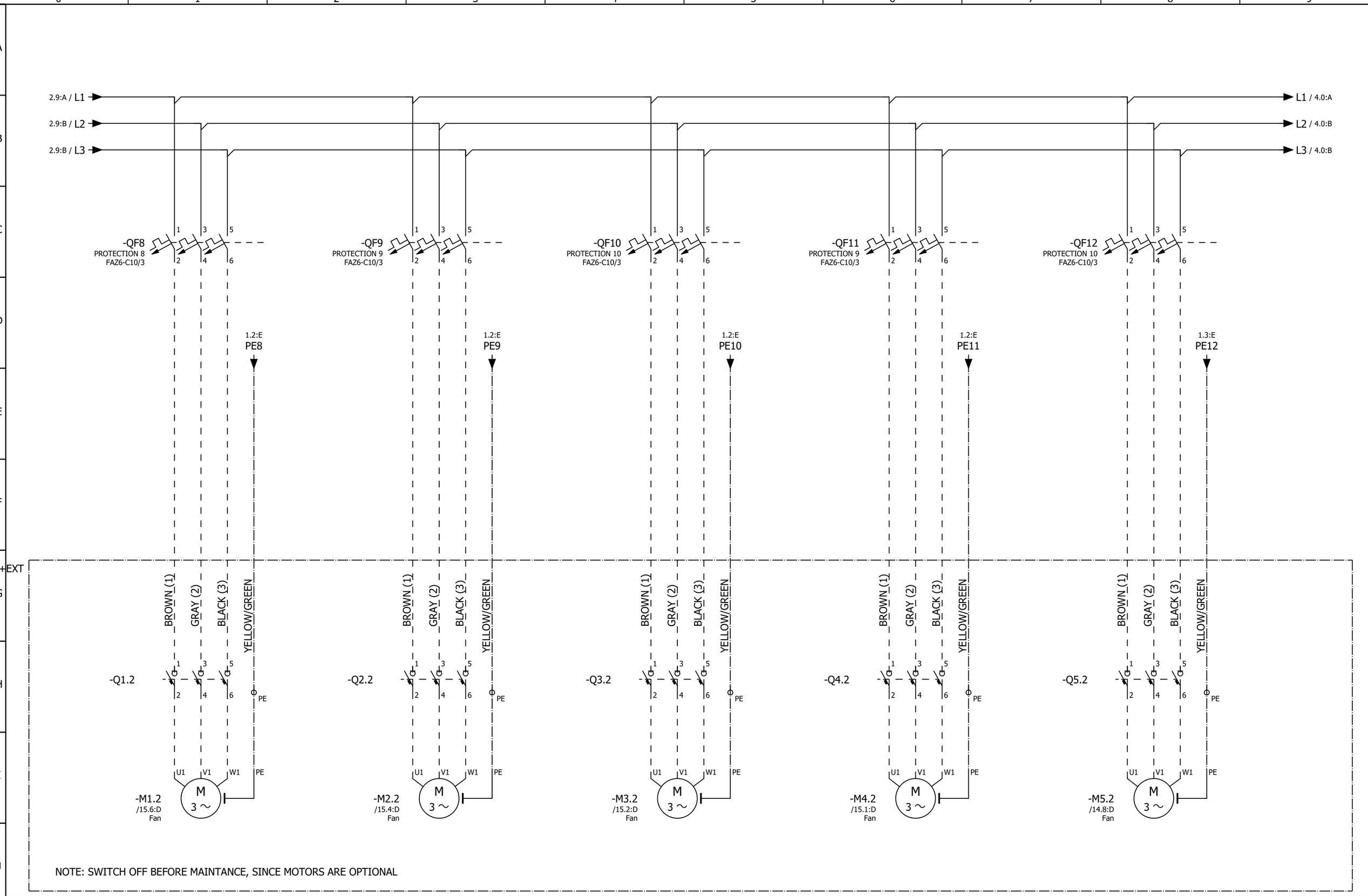

			Date	30/01/2015	CM00009388	ALFA LU-VE	Power circuit	Mounting locations + QE	Page +QE/3
			Elab.	Franco Meneghetti	EP 14 FANS ALFA-LUVE				Next 4
Modification	Date	Name						Function =	Total pages 39

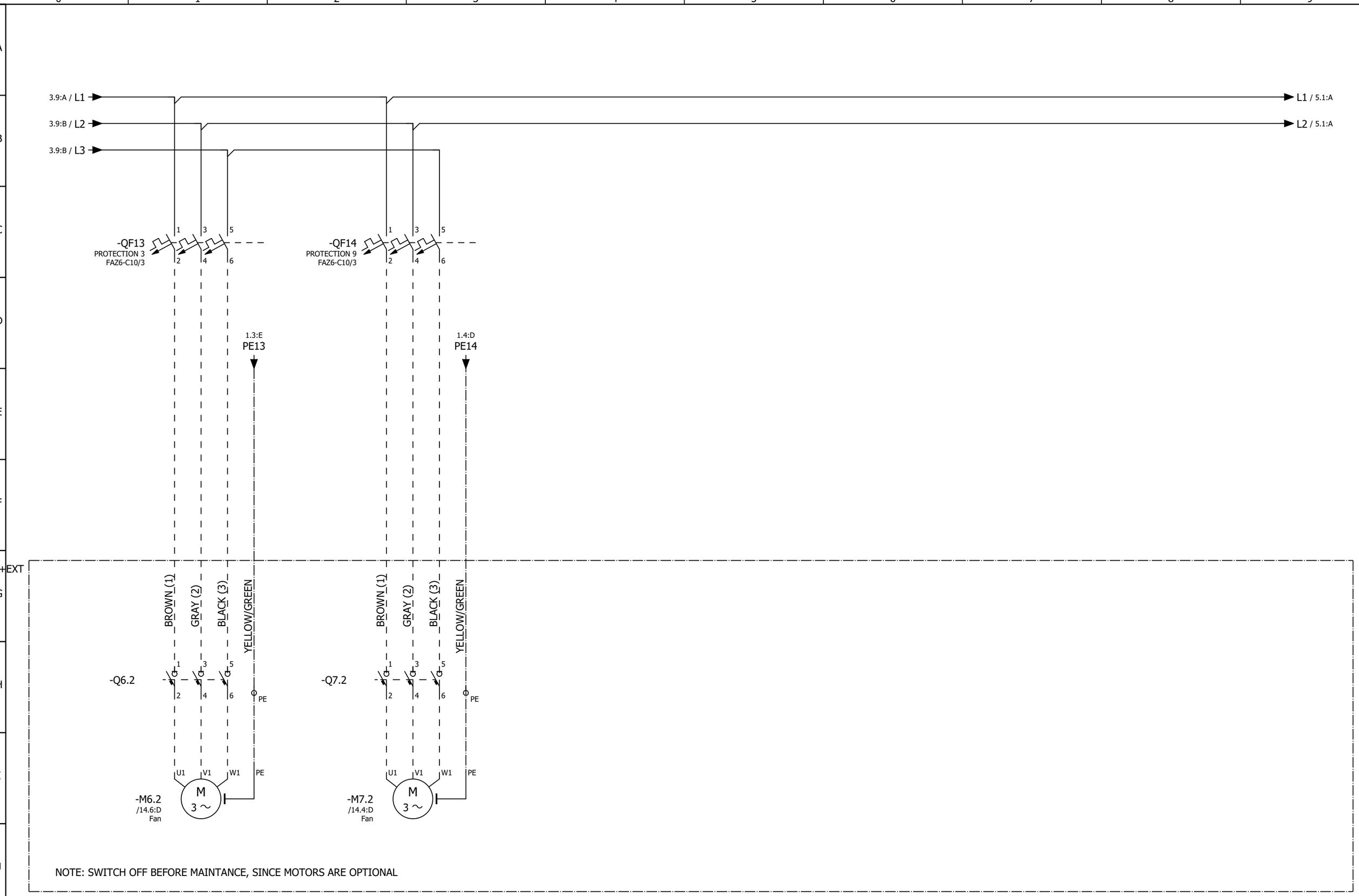

			Date	30/01/2015
			Elab.	Franco Meneghetti
Modification	Date	Name		

CM00009388

EP 14 FANS ALFA-LUVE

ALFA LU-VE

Power circuit

Mounting locations + QE

Function =

Page +QE/4

Next 5

Total pages 39

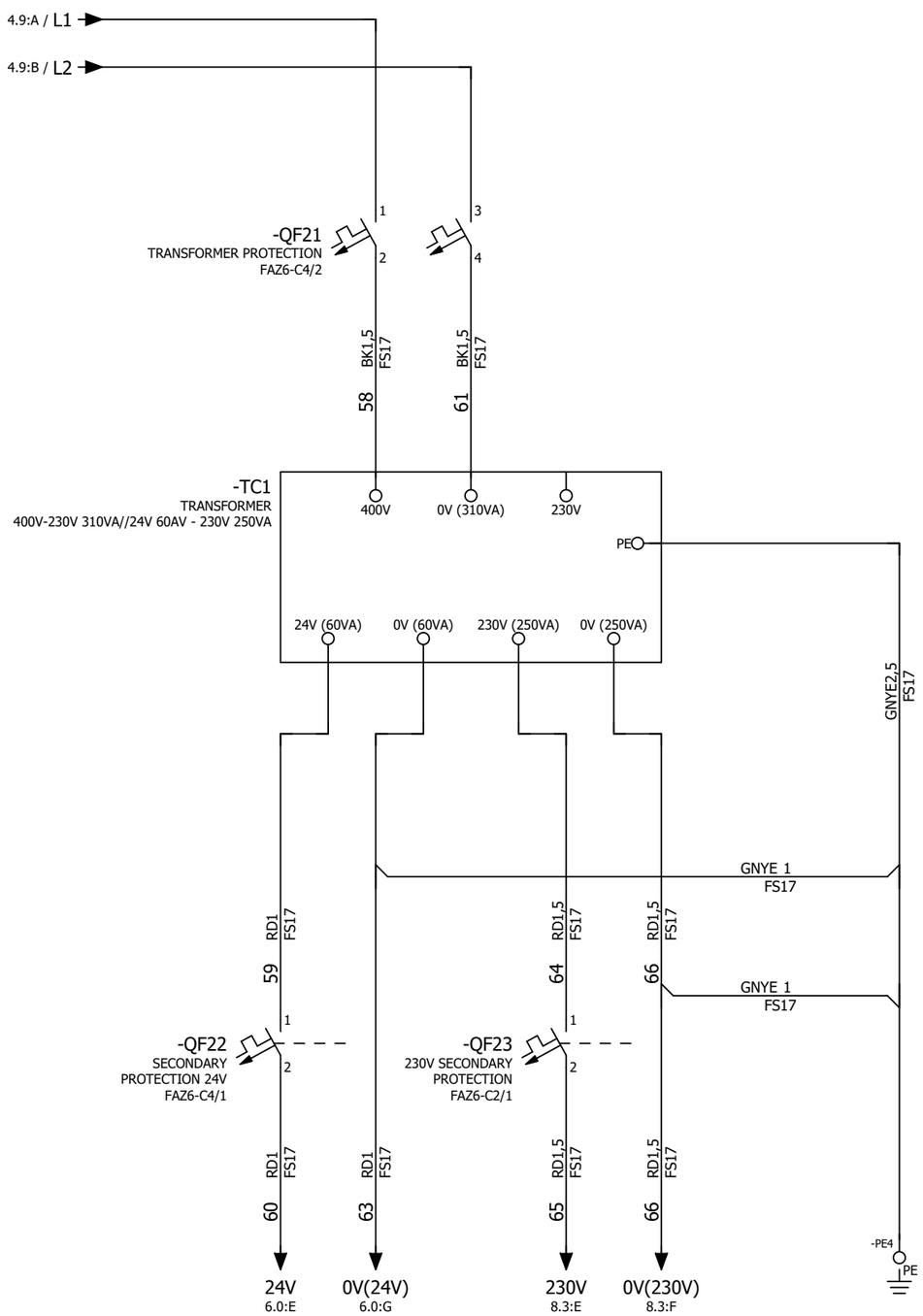

			Date	30/01/2015	CM00009388	ALFA LU-VE	Power circuit	Mounting locations + QE	Page +QE/5
			Elab.	Franco Meneghetti	EP 14 FANS ALFA-LUVE			Function =	Next 6
Modification	Date	Name							Total pages 39

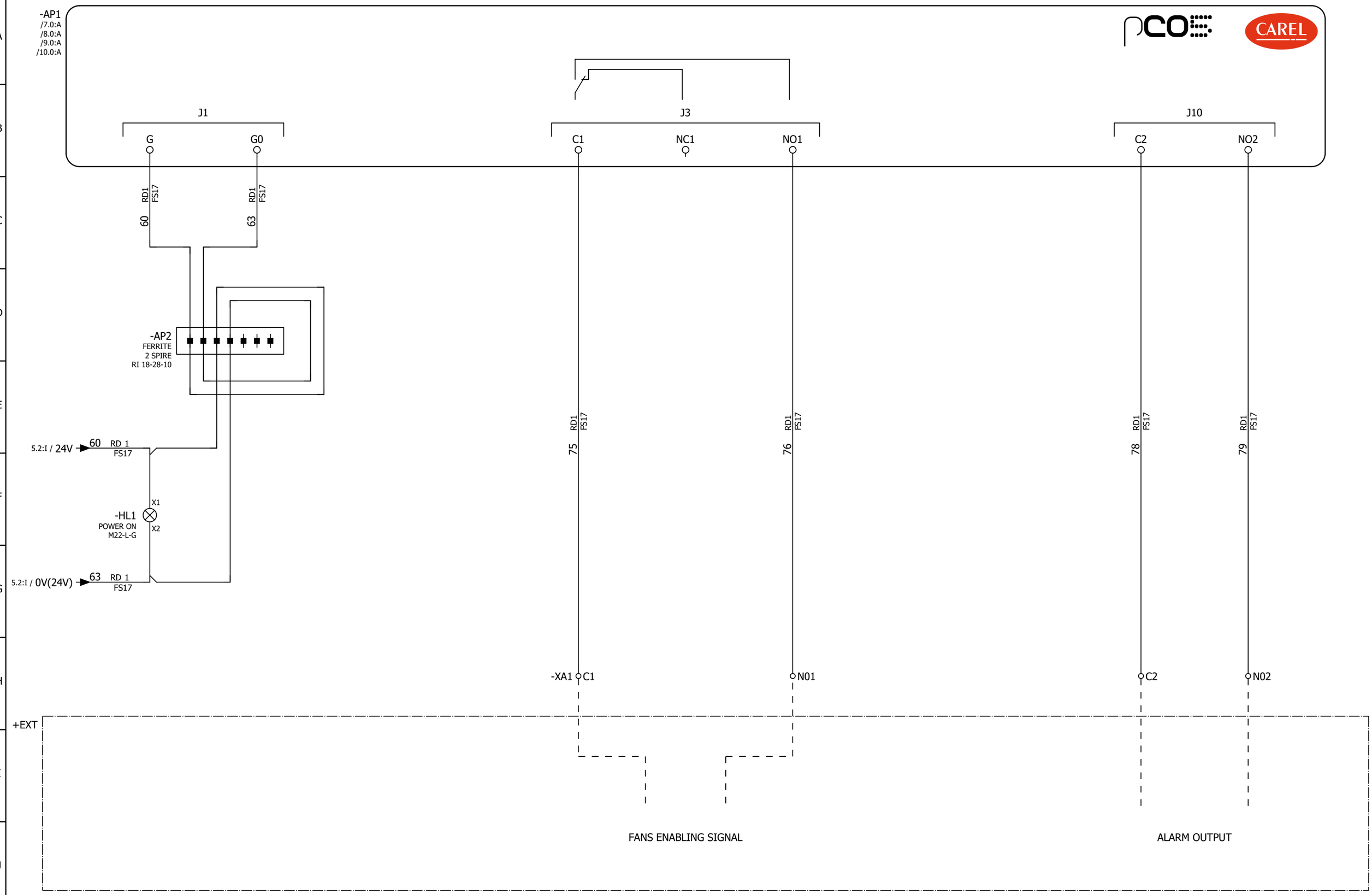

			Date	30/01/2015
			Elab.	Franco Meneghetti
Modification	Date	Name		

CM00009388

EP 14 FANS ALFA-LUVE

Auxiliary circuit

Mounting locations + QE

Function =

Page +QE/6

Next 7

Total pages 39

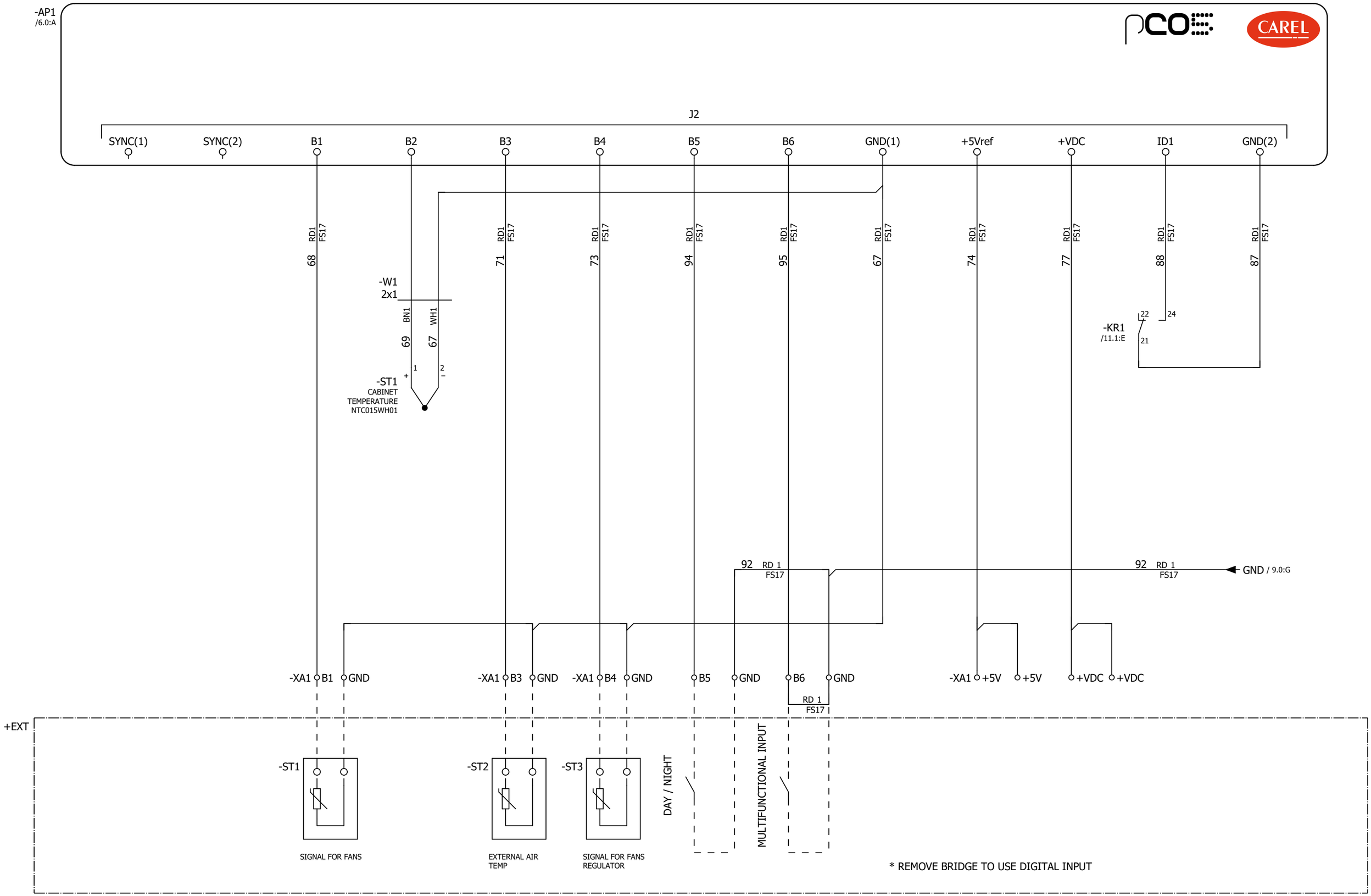

			Date	30/01/2015	CM00009388	ALFA LU-VE	Auxiliary circuit	Mounting locations + QE
			Elab.	Franco Meneghetti	EP 14 FANS ALFA-LUVE			Function =
Modification	Date	Name						

Page	+QE/7
Next	7.a
Total pages	39

NO PT1000
B1 SIGNAL FOR FANS (NTC)
B2 E.P. TEMPERATURE (NTC)
B3 EXTERNAL AIR TEMPERATURE (NTC)
B4 ----------

WITH PT1000
B1 ----------
B2 E.P. TEMPERATURE (NTC)
B3 EXTERNAL AIR TEMPERATURE (NTC)
B4 SIGNAL FOR FANS (PT1000)

PROBE CONNECTIONS

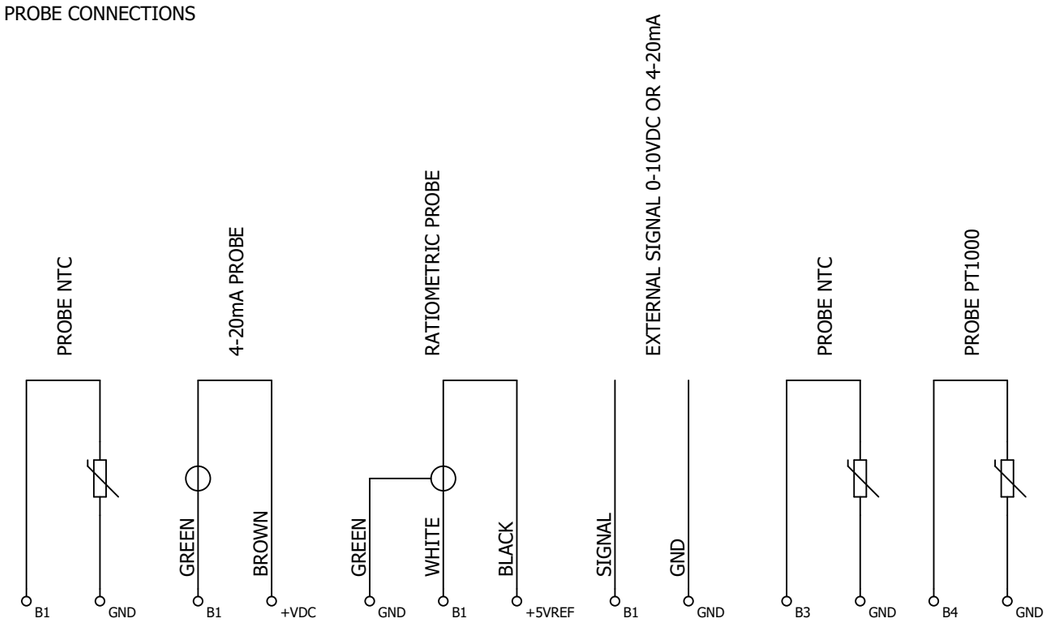

			Date	30/01/2015
			Elab.	Franco Meneghetti
Modification	Date	Name		

CM00009388

EP 14 FANS ALFA-LUVE

ALFA LU-VE

Auxiliary circuit

Mounting locations + QE

Function =

Page +QE/7.a

Next 8

Total pages 39

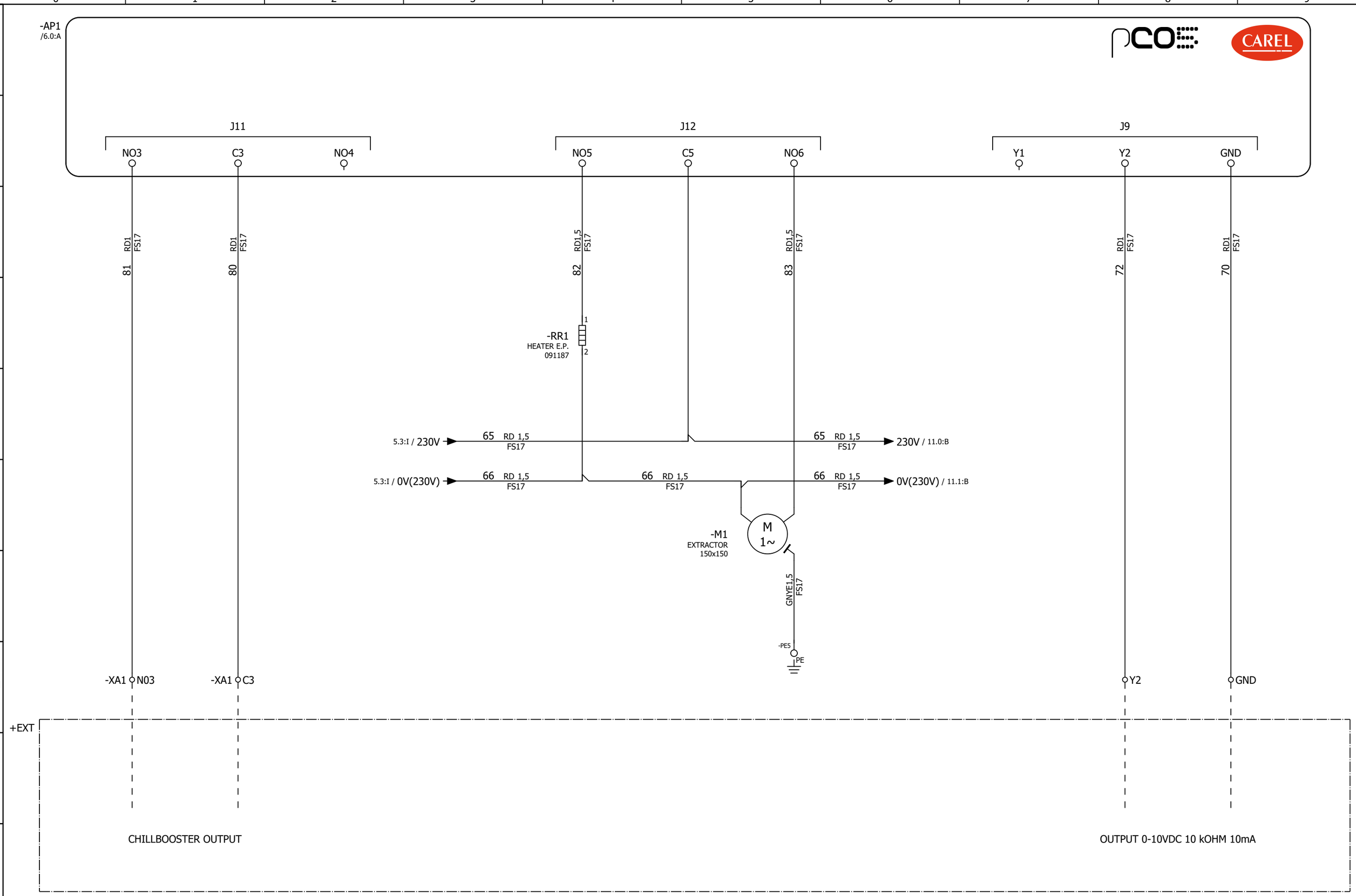

			Date	30/01/2015
			Elab.	Franco Meneghetti
Modification	Date	Name		

CM00009388

EP 14 FANS ALFA-LUVE

Auxiliary circuit

Mounting locations + QE

Function =

Page +QE/8

Next 9

Total pages 39

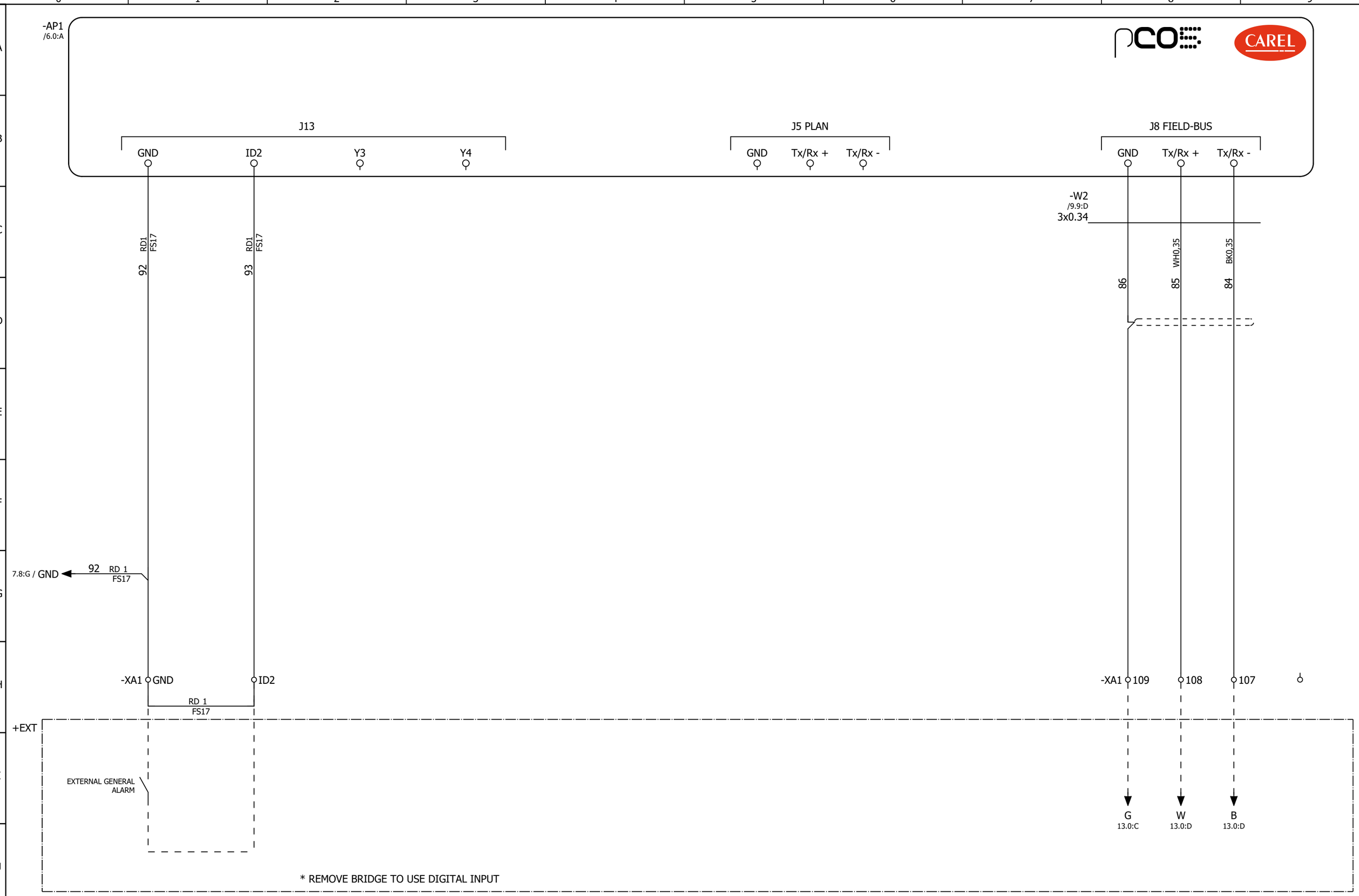

			Date	30/01/2015
			Elab.	Franco Meneghetti
Modification	Date	Name		

CM00009388

EP 14 FANS ALFA-LUVE

Auxiliary circuit

Mounting locations + QE

Function =

Page +QE/9

Next 10

Total pages 39

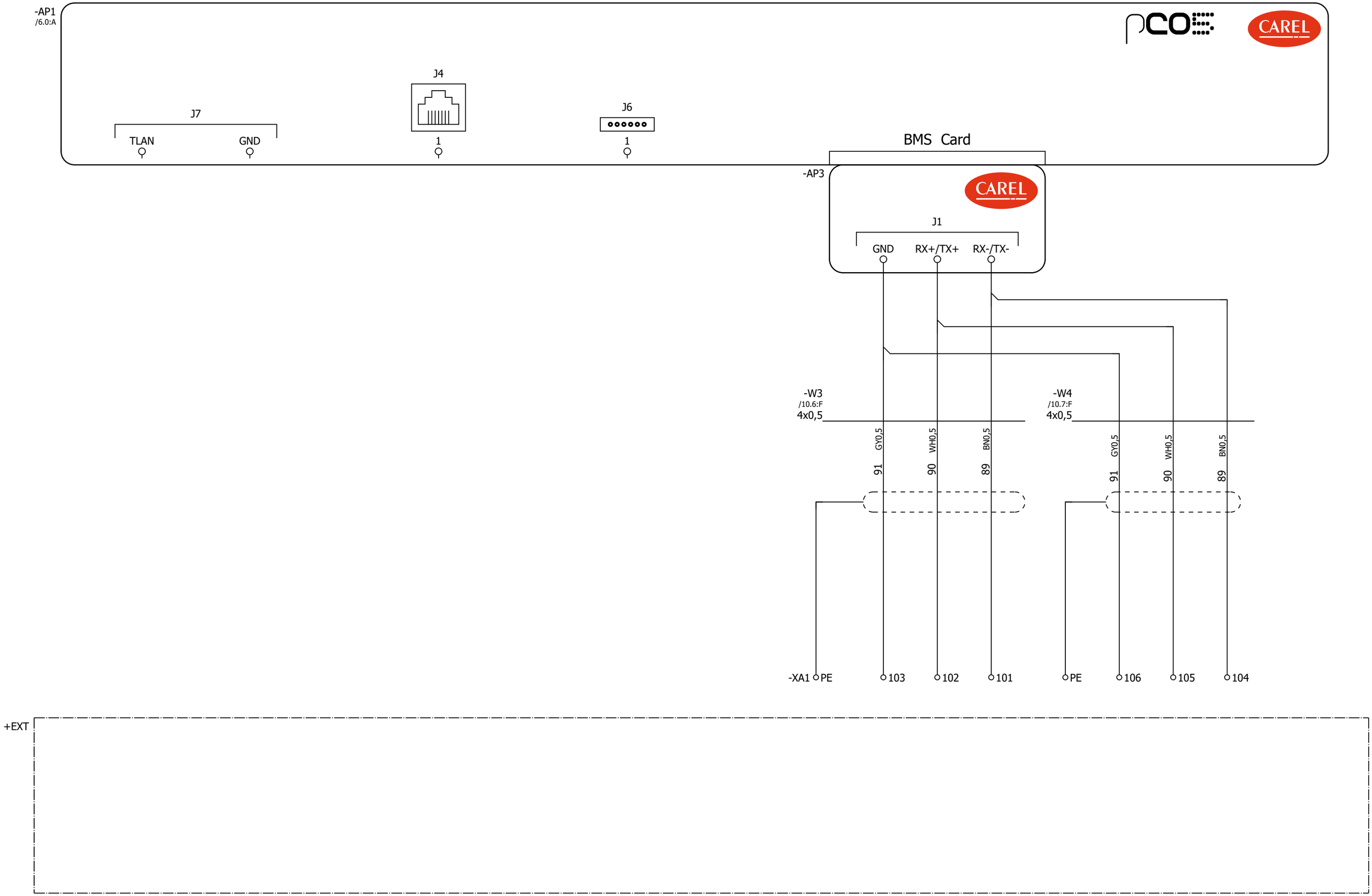

			Date	30/01/2015	CM00009388	Auxiliary circuit	Mounting locations + QE	Page +QE/10
			Elab.	Franco Meneghetti	EP 14 FANS ALFA-LUVE			Next 11
							Function =	Total pages 39
Modification	Date	Name						

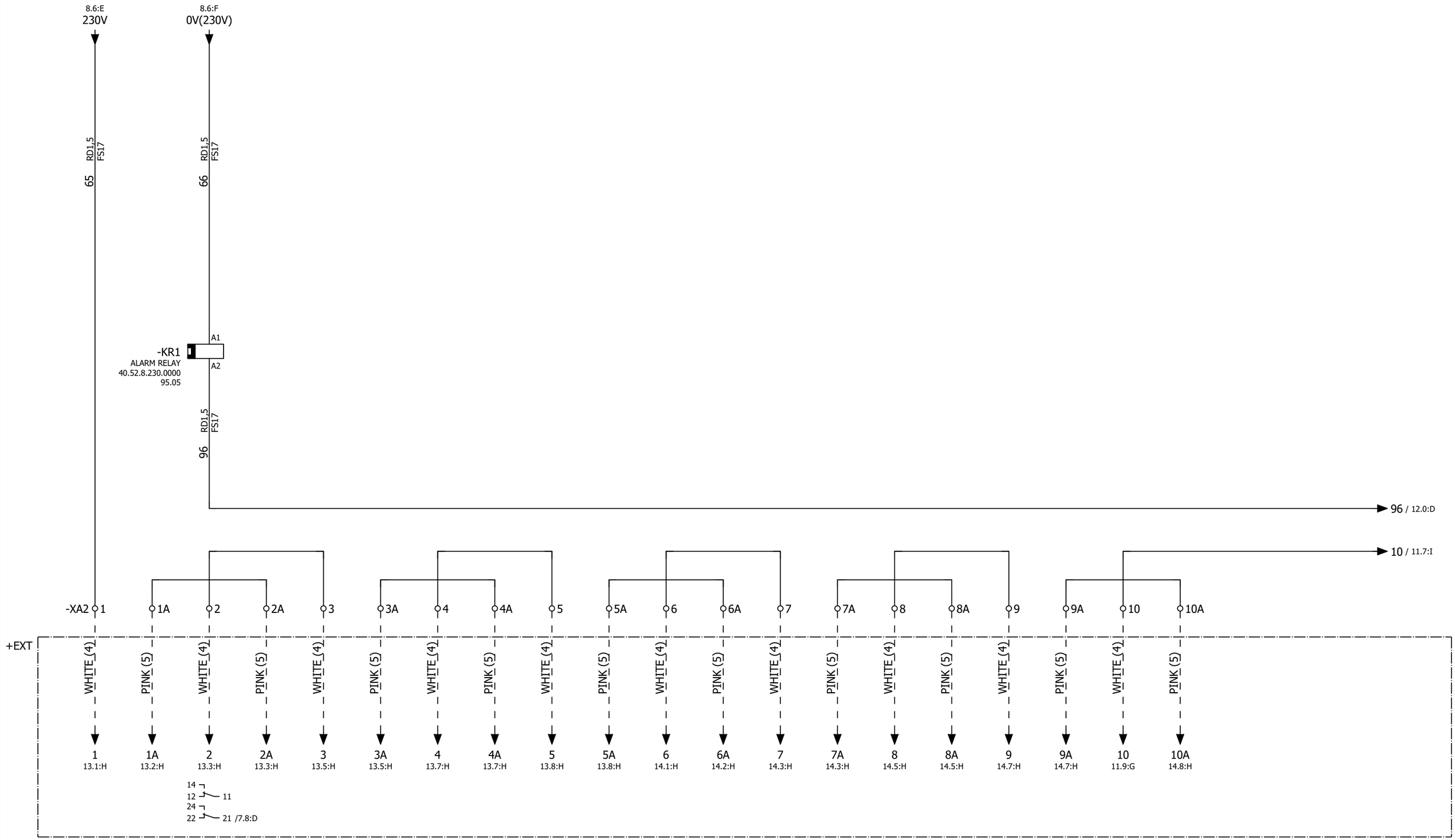

			Date	30/01/2015	CM00009388	ALFA LU-VE	Auxiliary circuit	Mounting locations + QE	Page +QE/11
			Elab.	Franco Meneghetti	EP 14 FANS ALFA-LUVE				Next 12
								Function =	Total pages 39
Modification	Date	Name							

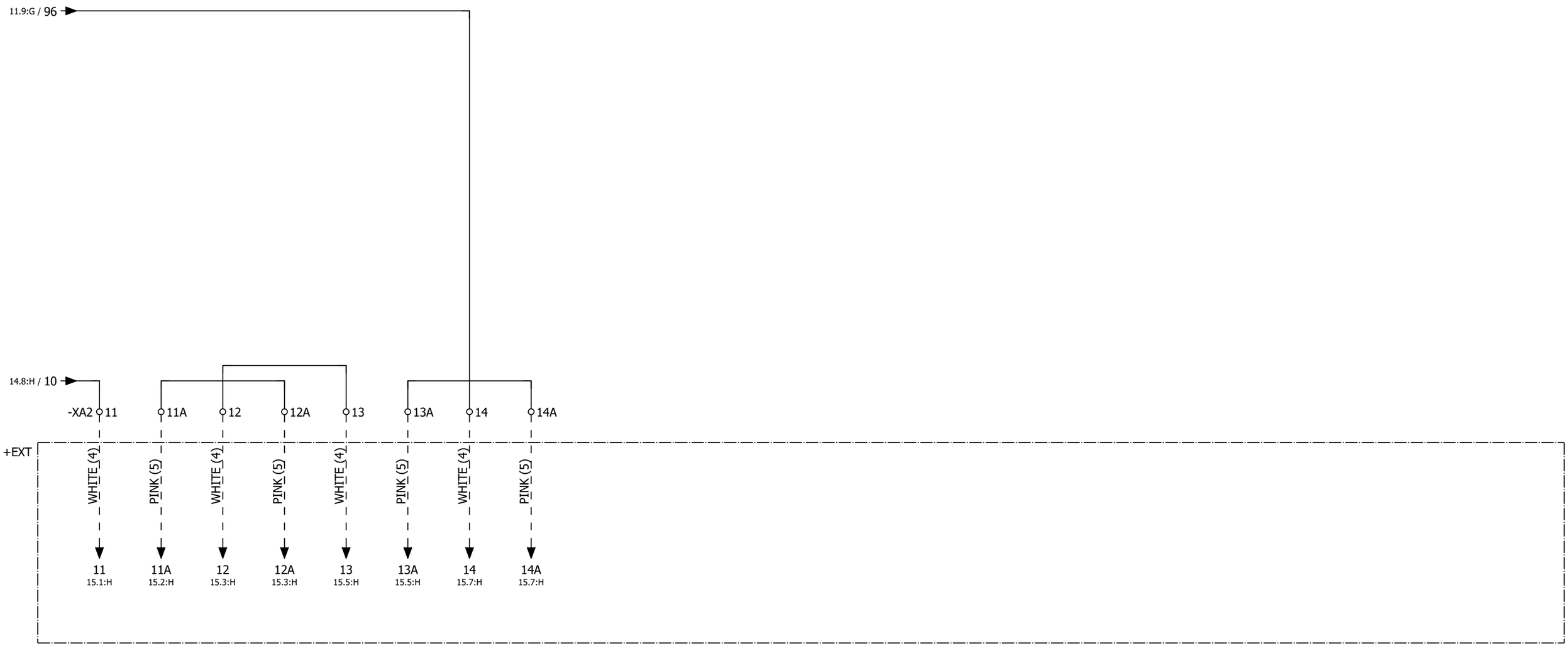

			Date	30/01/2015
			Elab.	Franco Meneghetti
Modification	Date	Name		

CM00009388

EP 14 FANS ALFA-LUVE

ALFA LU-VE

Auxiliary circuit

Mounting locations + QE

Function =

Page +QE/12

Next 13

Total pages 39

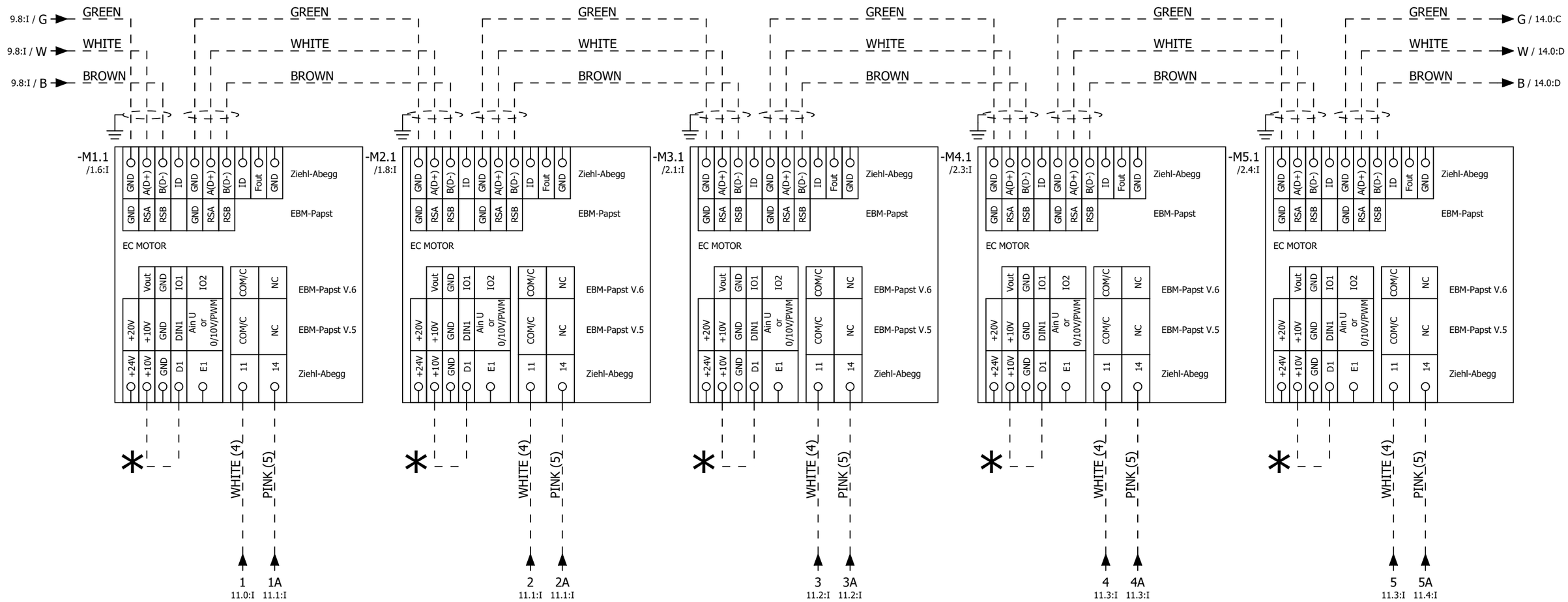

* CONNECTION NEEDED ONLY FOR ZIEHL-ABBEGG FANS

			Date	30/01/2015	CM00009388	ALFA LU-VE	Auxiliary circuit	Mounting locations + QE	Page +QE/13
			Elab.	Franco Meneghetti	EP 14 FANS ALFA-LUVE			Function =	Next 14
Modification	Date	Name							Total pages 39

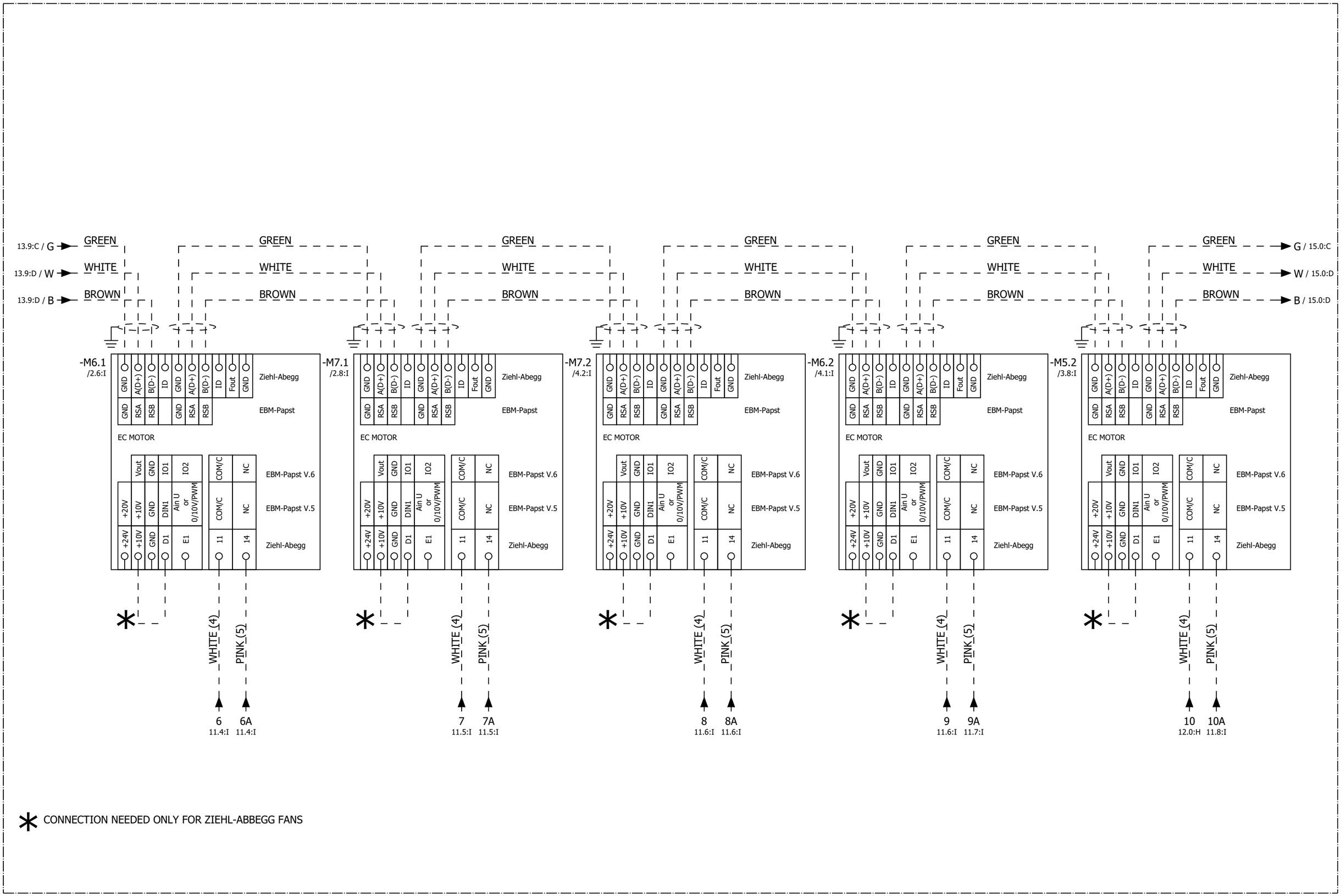

			Date	30/01/2015	CM00009388	ALFA LU-VE	Auxiliary circuit	Mounting locations + QE
			Elab.	Franco Meneghetti	EP 14 FANS ALFA-LUVE			Function =
Modification	Date	Name						

Page	+QE/14
Next	15
Total pages	39

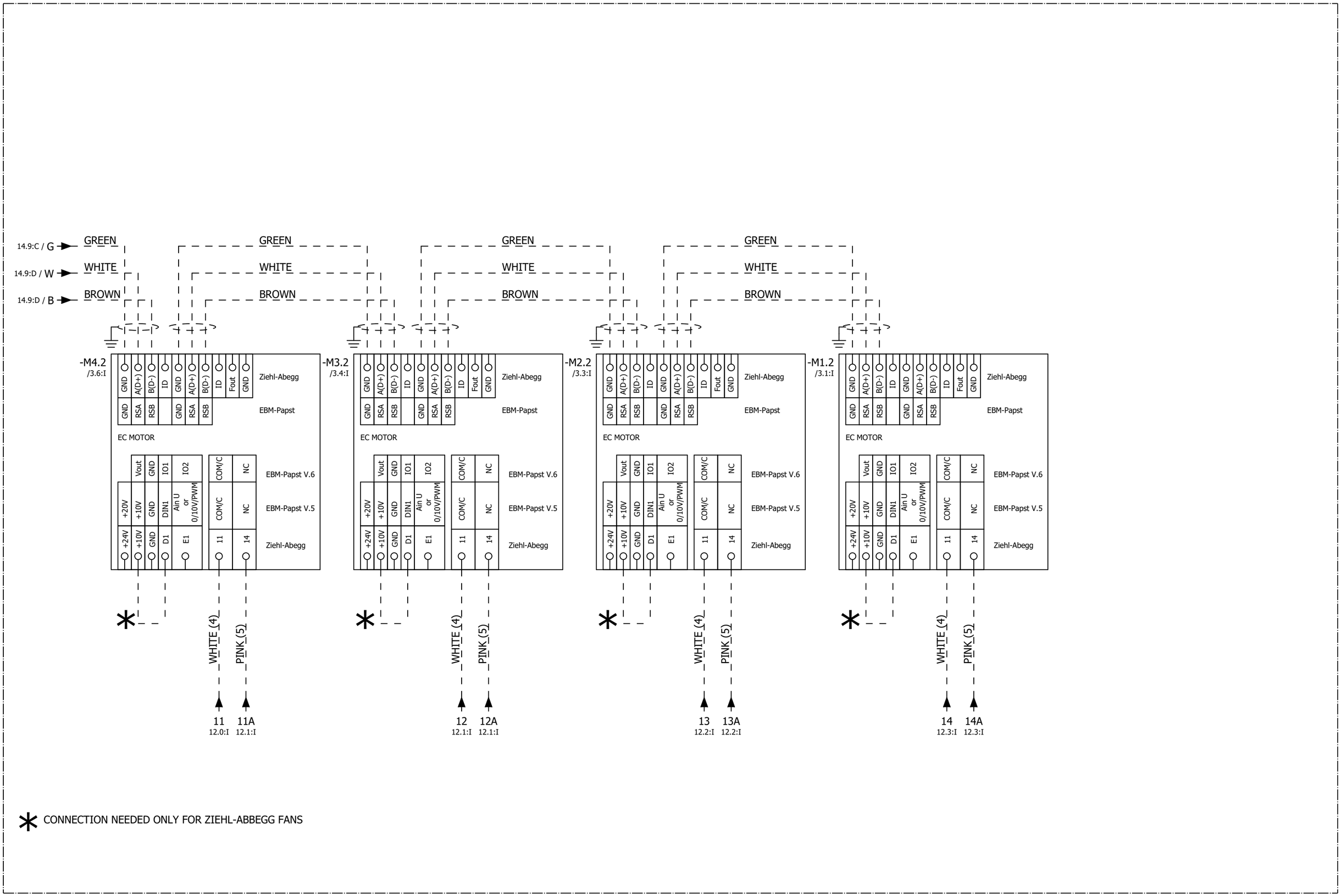

			Date	30/01/2015
			Elab.	Franco Meneghetti
Modification	Date	Name		

CM00009388

EP 14 FANS ALFA-LUVE

ALFA LU-VE

Auxiliary circuit

Mounting locations + QE

Function =

Page +QE/15

Next 16

Total pages 39

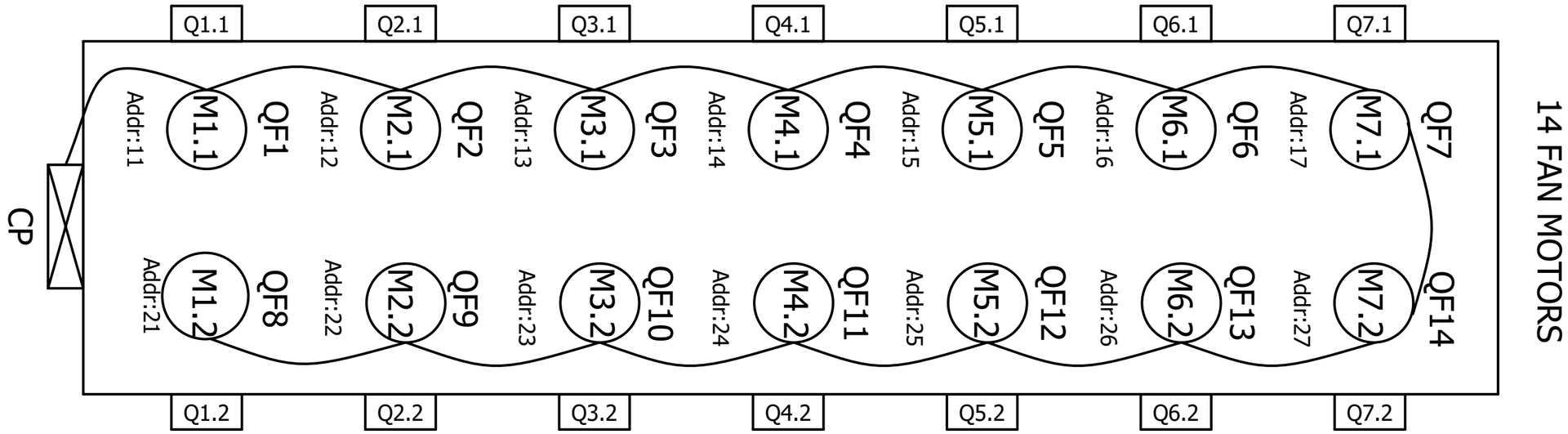

			Date	30/01/2015	CM00009388	ALFA LU-VE	Serial connection	Mounting locations + QE	Page +QE/16
			Elab.	Franco Meneghetti	EP 14 FANS ALFA-LUVE				Next 17
								Function =	Total pages 39
Modification	Date	Name							

CAREL

CAREL INDUSTRIES S.p.A. - Società Unipersonale
Via dell'Industria, 11 - 35020 Brugine – Padova – Italia
Tel. (+39) 049.9716611 – Fax (+39) 049.9716600
www.carel.com – e-mail: carel@carel.com

Cap. Soc. € 10.000.000 i.v.
C.C.I.A.A. Padova Reg. Imp. n. 4359090281
Part. IVA e Cod. Fisc. 04359090281
Società soggetta ad attività di direzione e coordinamento di Carel S.p.A.

CE

EU Declaration of Conformity

Manufacturer: **CAREL Industries S.p.A.**
Via dell'Industria, 11 35020 Brugine (PD) Italy

Electric Control Panels series Carel Power Solutions
Code :
Serial number:

CM00009388 / CM00009567

The manufacturer declares that all the above indicated products are in accordance with the EU Directives:

2006/95/EC (LVD)

and comply with the requirements of the following European standards:

EN 60204-1

Brugine, 01/09/2015

CAREL INDUSTRIES S.p.A.
Technical Director

Ing. Umberto Bianchini

Multicore cables scheme

Cable type PROBE CABLE

Oracle code PROBE CABLE

Total Cable Length Cut:

Departure | Cross ref. | Terminator

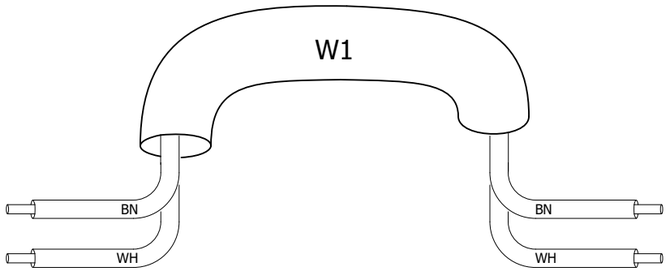

Terminator | Cross ref. | Arrival

Unsheathing cable departure

Unsheathing cable arrival

			Date	30/01/2015	CM00009388	Multicore cables scheme	Mounting locations +
			Elab.	Franco Meneghetti	EP 14 FANS ALFA-LUVE		Function =REP1
Modification	Date	Name					

ALFA LU-VE

Page	=REP1/1,0
Next	1,1
Total pages	39

Multicore cables scheme

Cable type Belden

Oracle code 1008176AXX

Total Cable Length Cut:

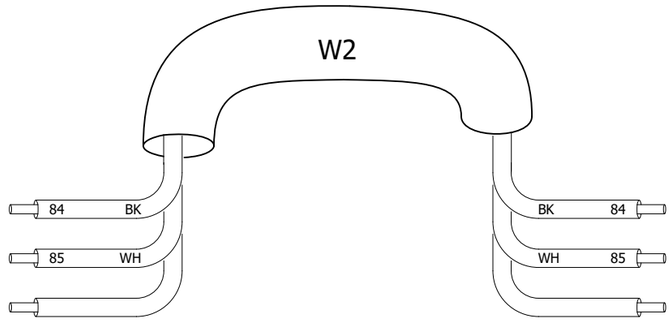

Departure	Cross ref.	Terminator	Terminator	Cross ref.	Arrival
XA1:107:A	+QE/9.8:H			+QE/9.8:B	+QE-AP1:J8 FIELD-BUS:Tx/Rx -
XA1:108:B	+QE/9.8:H			+QE/9.8:B	+QE-AP1:J8 FIELD-BUS:Tx/Rx +

Unsheathing cable departure

Unsheathing cable arrival

			Date	30/01/2015
			Elab.	Franco Meneghetti
Modification	Date	Name		

CM00009388

EP 14 FANS ALFA-LUVE

ALFA LU-VE

Multicore cables scheme

Mounting locations +

Function =REP1

Page =REP1/1,1

Next 1,2

Total pages 39

Multicore cables scheme

Carel STD-V2

Cable type Shielded 3x0.5

Oracle code 1008019AXX

Total Cable Length Cut:

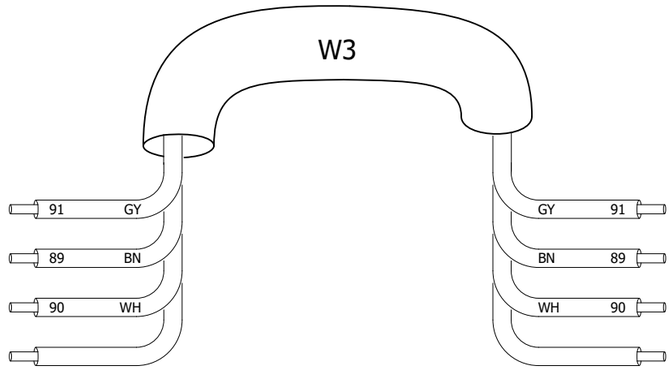

Departure	Cross ref.	Terminator	Terminator	Cross ref.	Arrival
XA1:103:A	+QE/10.6:H			+QE/10.6:C	+QE-AP3:J1:GND
XA1:101:A	+QE/10.7:H			+QE/10.7:C	+QE-AP3:J1:RX-/TX-
XA1:102:B	+QE/10.6:H			+QE/10.6:C	+QE-AP3:J1:RX+/TX+
XA1:PE:B	+QE/10.5:H			+QE/10.5:E	W3

Unsheathing cable departure

Unsheathing cable arrival

			Date	30/01/2015	CM00009388	ALFA LU-VE	Multicore cables scheme	Mounting locations +	Page =REP1/1,2
			Elab.	Franco Meneghetti	EP 14 FANS ALFA-LUVE				Next 1,3
								Function =REP1	Total pages 39
Modification	Date	Name							

Multicore cables scheme

Carel STD-V2

Cable type Shielded 3x0.5

Oracle code 1008019AXX

Total Cable Length Cut:

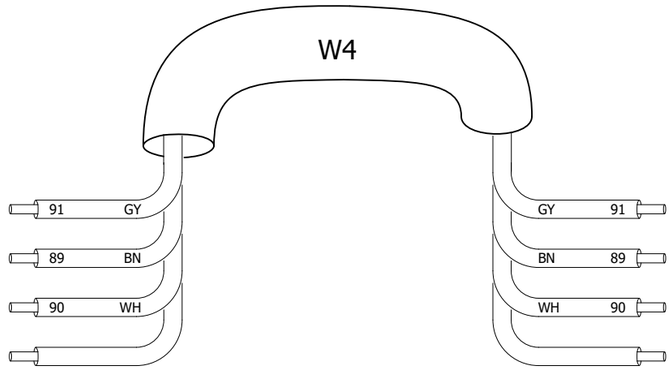

Departure	Cross ref.	Terminator	Terminator	Cross ref.	Arrival
XA1:106:B	+QE/10.8:H			+QE/10.6:C	+QE-AP3:J1:GND
XA1:104:B	+QE/10.8:H			+QE/10.7:C	+QE-AP3:J1:RX-/TX-
XA1:105:A	+QE/10.8:H			+QE/10.6:C	+QE-AP3:J1:RX+/TX+
XA1:PE:A	+QE/10.7:H			+QE/10.7:E	W4

Unsheathing cable departure

Unsheathing cable arrival

			Date	30/01/2015	CM00009388	ALFA LU-VE	Multicore cables scheme	Mounting locations +	Page =REP1/1,3
			Elab.	Franco Meneghetti	EP 14 FANS ALFA-LUVE				Next 2,0
								Function =REP1	Total pages 39
Modification	Date	Name							

Terminal diagram

Terminal strip

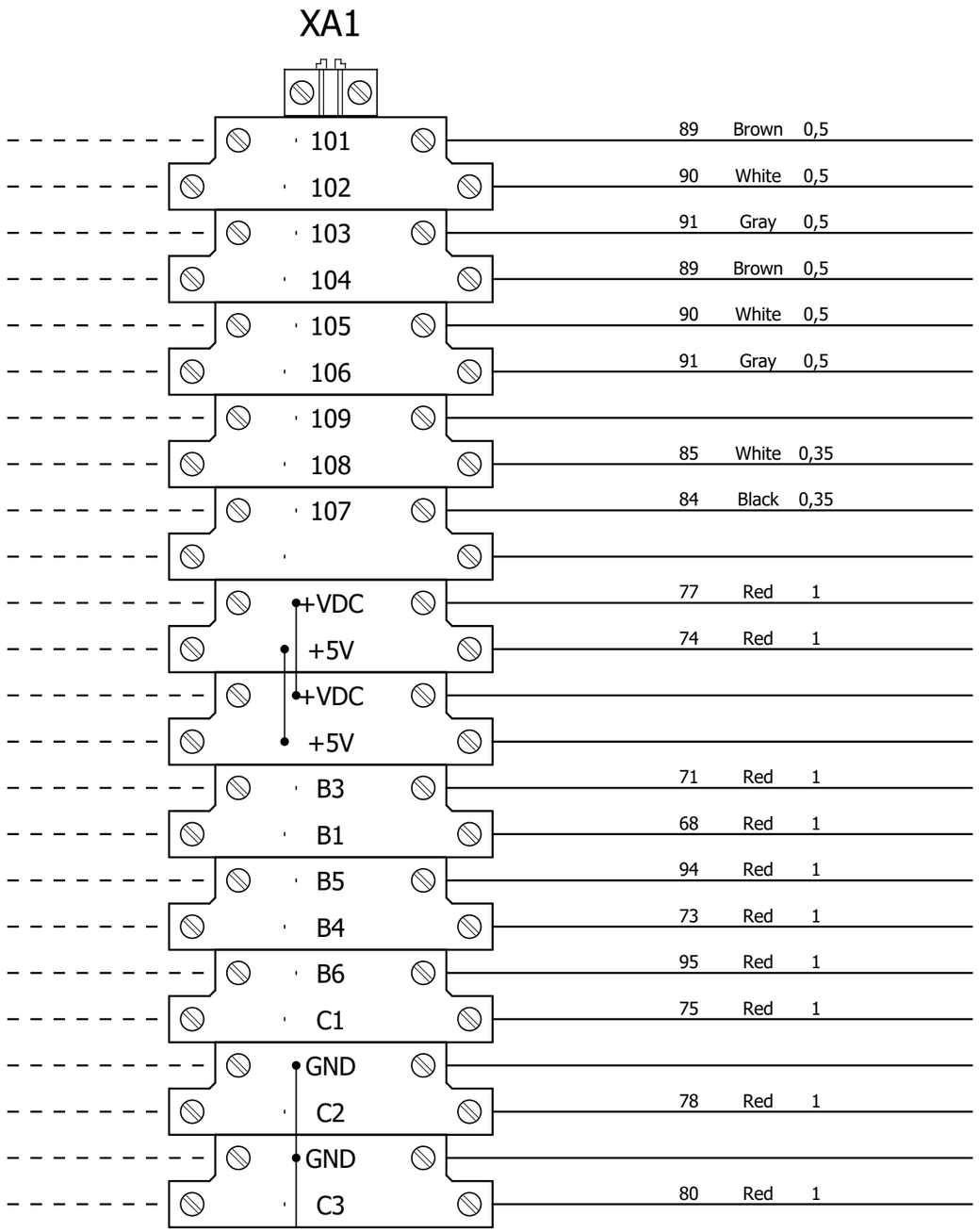

External targets	Teminal type	Terminal position on the drawings
	STTB 2,5	+QE/10.7:H
		+QE/10.6:H
	STTB 2,5	+QE/10.6:H
		+QE/10.8:H
	STTB 2,5	+QE/10.8:H
		+QE/10.8:H
	STTB 2,5	+QE/9.8:H
		+QE/9.8:H
	STTB 2,5	+QE/9.8:H
		+QE/9.9:H
	STTB 2,5	+QE/7.7:H
		+QE/7.7:H
	STTB 2,5	+QE/7.8:H
		+QE/7.7:H
	STTB 2,5	+QE/7.3:H
		+QE/7.2:H
	STTB 2,5	+QE/7.5:H
		+QE/7.4:H
	STTB 2,5	+QE/7.5:H
		+QE/6.4:H
	STTB 2,5	+QE/7.2:H
		+QE/6.8:H
	STTB 2,5	+QE/7.3:H
		+QE/8.1:H

Terminal diagram

Terminal strip

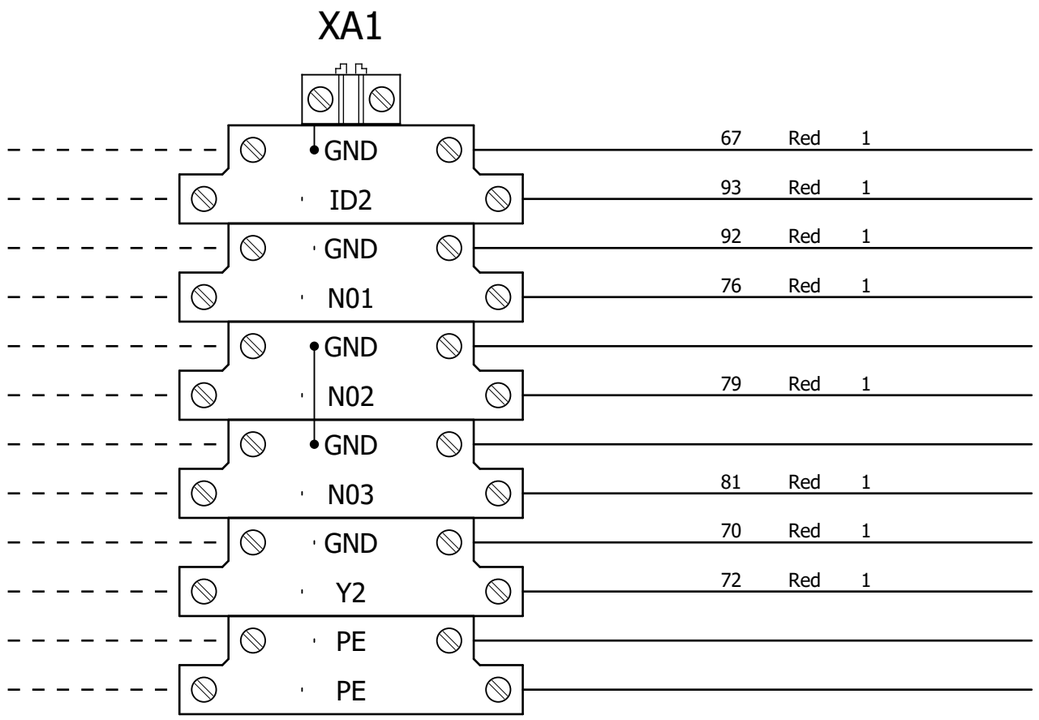

External targets	Teminal type	Terminal position on the drawings
	STTB 2,5	+QE/7.4:H
		+QE/9.1:H
	STTB 2,5	+QE/9.1:H
		+QE/6.5:H
	STTB 2,5	+QE/7.5:H
		+QE/6.8:H
	STTB 2,5	+QE/7.6:H
		+QE/8.1:H
	STTB 2,5	+QE/8.8:H
		+QE/8.8:H
	STTB 2,5-PE	+QE/10.7:H
		+QE/10.5:H

Terminal diagram

Terminal strip

XA2

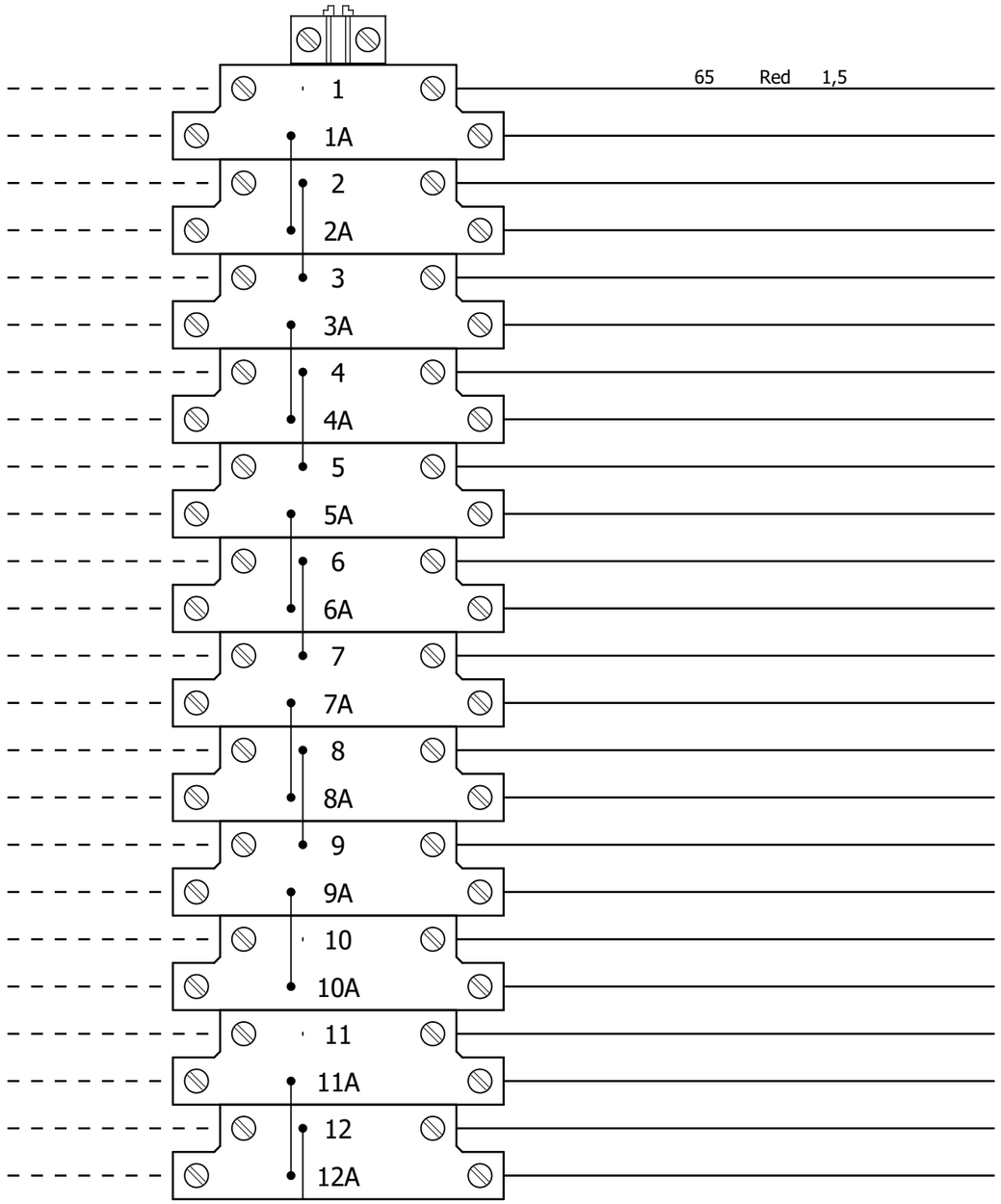

External targets	Teminal type	Terminal position on the drawings
	STTB 2,5	+QE/11.0:H
		+QE/11.1:H
	STTB 2,5	+QE/11.1:H
		+QE/11.1:H
	STTB 2,5	+QE/11.2:H
		+QE/11.2:H
	STTB 2,5	+QE/11.3:H
		+QE/11.3:H
	STTB 2,5	+QE/11.3:H
		+QE/11.4:H
	STTB 2,5	+QE/11.4:H
		+QE/11.4:H
	STTB 2,5	+QE/11.5:H
		+QE/11.5:H
	STTB 2,5	+QE/11.6:H
		+QE/11.6:H
	STTB 2,5	+QE/11.6:H
		+QE/11.7:H
	STTB 2,5	+QE/11.7:H
		+QE/11.8:H
	STTB 2,5	+QE/12.0:H
		+QE/12.1:H
	STTB 2,5	+QE/12.1:H
		+QE/12.1:H

Terminal diagram

Terminal strip

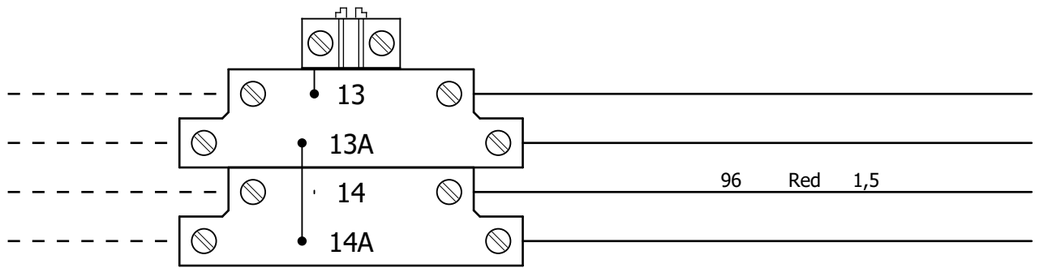

External targets	Teminal type	Terminal position on the drawings
	STTB 2,5	+QE/12.2:H
		+QE/12.2:H
	STTB 2,5	+QE/12.3:H
		+QE/12.3:H

BOM internal panel

InternoQE_F01_003

Short name	Designation	Function text	Position	Manufacturer	Component tipe	Oracle code
AP1	Programmable control		=+QE/6.0:A	CAREL	PCO Compact	PCOXLV0DB0
AP2	Damping magnet, M 5.0	FERRITE 2 SPIRE	=+QE/6.1:D	KE-KITAGAWA	FERRITE CORE	0907877AXX
AP3	Scheda seriale BMS		=+QE/10.6:B	CAREL	Scheda seriale BMS	PCOS004850
E1	Eart terminal	GROUND BAR	=+QE/1.2:D	SCHNEIDER ELECTRIC	14979	2217211AXX
E2	Eart terminal	=	=+QE/1.4:D	SCHNEIDER ELECTRIC	14979	2217211AXX
HL1	Green indicator plate	POWER ON	=+QE/6.1:F	EATON ELECTRIC	M22-L-G	0505187AXX
HL1	Plate	=	=+QE/6.1:F	CEMBRE	15X27	1800243AXX
HL1	Support plate	=	=+QE/6.1:F	CEMBRE	D22 17X30	1800242AXX
HL1	Glass plate	=	=+QE/6.1:F	CEMBRE	15X27	1800244AXX
HL1	Support	=	=+QE/6.1:F	EATON ELECTRIC	M22-A	0505184AXX
HL1	Green lap 24Vac	=	=+QE/6.1:F	EATON ELECTRIC	M22-LED-G	0505101CEL
KR1	Relay	ALARM RELAY	=+QE/11.1:E	FINDER	40.52.8.230.0000	0100751CEL
KR1	Base element	=	=+QE/11.1:E	FINDER	95.05	5931384AXX
M1	Internal fan	EXTRACTOR	=+QE/8.5:F	EZM	150x150	1312697AXX
PE	GROUND		=+QE/1.0:G		PE	PE
PE1	GROUND		=+QE/1.1:H		PE	PE
PE2	GROUND		=+QE/1.2:H		PE	PE
PE3	GROUND		=+QE/1.3:H		PE	PE
PE4	GROUND		=+QE/5.4:H		PE	PE
PE5	GROUND		=+QE/8.5:G		PE	PE
PE6	GROUND		(Quadro elettri co.MP1)		PE	PE
PE7	GROUND		(Quadro elettri co.MP1)		PE	PE
PE8	GROUND		(Quadro elettri co.MP1)		PE	PE

BOM internal panel

InternoQE_F01_003

Short name	Designation	Function text	Position	Manufacturer	Component tipe	Oracle code
PE9	GROUND		=+QE/1.5:H		PE	PE
QF1	Power circuit breaker	PROTECTION 1	=+QE/1.6:C	EATON ELECTRIC	FAZ6-C10/3	0403856CEL
QF2	Power circuit breaker	PROTECTION 2	=+QE/1.8:C	EATON ELECTRIC	FAZ6-C10/3	0403856CEL
QF3	Power circuit breaker	PROTECTION 3	=+QE/2.1:C	EATON ELECTRIC	FAZ6-C10/3	0403856CEL
QF4	Power circuit breaker	PROTECTION 4	=+QE/2.3:C	EATON ELECTRIC	FAZ6-C10/3	0403856CEL
QF5	Power circuit breaker	PROTECTION 5	=+QE/2.4:C	EATON ELECTRIC	FAZ6-C10/3	0403856CEL
QF6	Power circuit breaker	PROTECTION 6	=+QE/2.6:C	EATON ELECTRIC	FAZ6-C10/3	0403856CEL
QF7	Power circuit breaker	PROTECTION 7	=+QE/2.8:C	EATON ELECTRIC	FAZ6-C10/3	0403856CEL
QF8	Power circuit breaker	PROTECTION 8	=+QE/3.1:C	EATON ELECTRIC	FAZ6-C10/3	0403856CEL
QF9	Power circuit breaker	PROTECTION 9	=+QE/3.3:C	EATON ELECTRIC	FAZ6-C10/3	0403856CEL
QF10	Power circuit breaker	PROTECTION 10	=+QE/3.4:C	EATON ELECTRIC	FAZ6-C10/3	0403856CEL
QF11	Power circuit breaker	PROTECTION 9	=+QE/3.6:C	EATON ELECTRIC	FAZ6-C10/3	0403856CEL
QF12	Power circuit breaker	PROTECTION 10	=+QE/3.8:C	EATON ELECTRIC	FAZ6-C10/3	0403856CEL
QF13	Power circuit breaker	PROTECTION 3	=+QE/4.1:C	EATON ELECTRIC	FAZ6-C10/3	0403856CEL
QF14	Power circuit breaker	PROTECTION 9	=+QE/4.2:C	EATON ELECTRIC	FAZ6-C10/3	0403856CEL
QF21	Power circuit breaker	TRANSFORMER PROTECTION	=+QE/5.2:B	EATON ELECTRIC	FAZ6-C4/2	0403468AXX
QF22	Power circuit breaker	SECONDARY PROTECTION 24V	=+QE/5.2:G	EATON ELECTRIC	FAZ6-C4/1	0403824AXX
QF23	Power circuit breaker	230V SECONDARY PROTECTION	=+QE/5.3:G	EATON ELECTRIC	FAZ6-C2/1	0403819AXX
QS1	Disconnect switch	MAIN SWITCH	=+QE/1.1:E	SOCOMEC	Sirco M125	0402342AXX
QS1	Operation	=	=+QE/1.1:E	SOCOMEC	Y/R 100-125A	0402345AXX
RR1	Scaldiglia 200W 230V	HEATER E.P.	=+QE/8.4:D	EZM	091187	5729759AXX
ST1	SENSOR NTC WH IP68 -50T105 CABLE 1,5M	CABINET TEMPERATURE	=+QE/7.3:E	CAREL	NTC015WH01	NTC015WH01
TC1	TRANSFORMER	TRANSFORMER	=+QE/5.2:D		400V-230V 310VA//24V 60AV - 230V 250VA	0910244AXX

BOM external panel

EsternoQE_F01_003

Place	Short name	Function text	Position	Technical characteristics
+EXT	M1.1	Fan	=+QE/1.6:I	
+EXT	M1.2	=	=+QE/3.1:I	
+EXT	M2.1	=	=+QE/1.8:I	
+EXT	M2.2	=	=+QE/3.3:I	
+EXT	M3.1	=	=+QE/2.1:I	
+EXT	M3.2	=	=+QE/3.4:I	
+EXT	M4.1	=	=+QE/2.3:I	
+EXT	M4.2	=	=+QE/3.6:I	
+EXT	M5.1	=	=+QE/2.4:I	
+EXT	M5.2	=	=+QE/3.8:I	
+EXT	M6.1	=	=+QE/2.6:I	
+EXT	M6.2	=	=+QE/4.1:I	
+EXT	M7.1	=	=+QE/2.8:I	
+EXT	M7.2	=	=+QE/4.2:I	
+EXT	ST1	SIGNAL FOR FANS	=+QE/7.2:I	
+EXT	ST2	EXTERNAL AIR TEMP	=+QE/7.3:I	
+EXT	ST3	SIGNAL FOR FANS REGULATOR	=+QE/7.4:I	

alfa.luvegroup.com

Product code	CM00009389	Rev	6
Project description	EP 16 FANS ALFA-LUVE		

Supply voltage	3P+N+E - 400V - 50Hz	Operating temperature	40°C
Rated current	83A Icc 6KA		
Auxiliary voltage	24Vac/230Vac		

Designed by	Franco Meneghetti	on	30/01/2015
Checked by	Mattia Bortolotto	on	10/12/2015
Approved by	Antonio Randisi	on	10/12/2015

NOT ALLOWED DELIVER TO THIRD PARTIES OR REPRODUCE THIS DOCUMENT NOT USE THE CONTENT OR OTHERWISE MAKE KNOWN TO THIRD PARTIES WITHOUT OUR EXPRESS PERMISSION. ANY INFRINGEMENT WILL RESULT IN DAMAGES SUFFERED. And it MADE SUBJECT TO ALL RIGHTS UNDER PATENTS OR MODELS

Cables Range

Cross-sect	N07V-K Range (A)	N07G9 Range (A)
0,5	\	NOT AVAILABLE
0,75	\	NOT AVAILABLE
1	8A	12A
1,5	11A	16A
2,5	15A	22.4A
4	20A	29.6A
6	26A	38.4A
10	36A	52.8A
16	48A	70.4A
25	64A	93.6A
35	80A	115.2A
50	95A	140A
95	150A	177.6A
120	170A	215.2A
150	195A	NOT AVAILABLE
185	220A	NOT AVAILABLE
240	260A	NOT AVAILABLE
300	300A	NOT AVAILABLE

Colors Table

Colors	Short name
Red	RD
Black	BK
Yellow	YE
Yellow\Green	GNYE
Orange	OG
Light blue	TQ
Blue	BU
Pink	PK
White	WH
Gray	GY
Brown	BN
Green	GN
Purple	VT
\	
\	
\	
\	

REVIEW TABLE

Rev.	Technical name	Date	Note
01	FRANCO MENEGHETTI	17/03/2015	- -
02	FRANCO MENEGHETTI	01/07/2015	- -
03	FRANCO MENEGHETTI	10/12/2015	- -
04	FRANCO MENEGHETTI	09/02/2016	- -
05	FRANCO MENEGHETTI	09/06/2017	- -
06	LUCA QUAGGIA	10/09/2019	- -

Table of contents

F06_003

Page	Page type	Page description	Date	Edited by
/1	Title page / cover sheet	Title page	31/01/2020	Luca Quaggia
/2	Pre-planning	Technical information	31/01/2020	Luca Quaggia
/3	Table of contents	Table of contents	31/01/2020	Luca Quaggia
/3.a	Table of contents	Table of contents	31/01/2020	Luca Quaggia
/4	Model view	General view	31/01/2020	Luca Quaggia
/5	Model view	View of all sides	31/01/2020	Luca Quaggia
/6	Model view	Mounting plate view	31/01/2020	Luca Quaggia
/7	Model view	Door view	31/01/2020	Luca Quaggia
/8	Model view	Guides view	31/01/2020	Luca Quaggia
/9	Model view	Channels view	31/01/2020	Luca Quaggia
/10	Model view	Bottom view	31/01/2020	Luca Quaggia
+QE/1	Schematic multi-line	Power circuit	31/01/2020	Luca Quaggia
+QE/2	Schematic multi-line	Power circuit	31/01/2020	Luca Quaggia
+QE/3	Schematic multi-line	Power circuit	31/01/2020	Luca Quaggia
+QE/4	Schematic multi-line	Power circuit	31/01/2020	Luca Quaggia
+QE/5	Schematic multi-line	Power circuit	31/01/2020	Luca Quaggia
+QE/6	Schematic multi-line	Auxiliary circuit	31/01/2020	Luca Quaggia
+QE/7	Schematic multi-line	Auxiliary circuit	31/01/2020	Luca Quaggia
+QE/7.a	Schematic multi-line	Auxiliary circuit	31/01/2020	Luca Quaggia
+QE/8	Schematic multi-line	Auxiliary circuit	31/01/2020	Luca Quaggia
+QE/9	Schematic multi-line	Auxiliary circuit	31/01/2020	Luca Quaggia
+QE/10	Schematic multi-line	Auxiliary circuit	31/01/2020	Luca Quaggia
+QE/11	Schematic multi-line	Auxiliary circuit	31/01/2020	Luca Quaggia
+QE/12	Schematic multi-line	Auxiliary circuit	31/01/2020	Luca Quaggia
+QE/13	Schematic multi-line	Auxiliary circuit	31/01/2020	Luca Quaggia
+QE/14	Schematic multi-line	Auxiliary circuit	31/01/2020	Luca Quaggia
+QE/15	Schematic multi-line	Auxiliary circuit	31/01/2020	Luca Quaggia
+QE/16	Schematic multi-line	Auxiliary circuit	31/01/2020	Luca Quaggia
+QE/17	Graphic	Serial connection	31/01/2020	Luca Quaggia
+QE/18	Graphic	Certificazione	31/01/2020	Luca Quaggia
=REP1/1,0	Cable diagram	Multicore cables scheme	31/01/2020	Luca Quaggia
=REP1/1,1	Cable diagram	Multicore cables scheme	31/01/2020	Luca Quaggia
=REP1/1,2	Cable diagram	Multicore cables scheme	31/01/2020	Luca Quaggia
=REP1/1,3	Cable diagram	Multicore cables scheme	31/01/2020	Luca Quaggia
=REP1/2,0	Terminal diagram	Terminal strip	31/01/2020	Luca Quaggia
=REP1/2,0.a	Terminal diagram	Terminal strip	31/01/2020	Luca Quaggia
=REP1/2,1	Terminal diagram	Terminal strip	31/01/2020	Luca Quaggia
=REP1/2,1.a	Terminal diagram	Terminal strip	31/01/2020	Luca Quaggia
=REP1/3,0	Parts list	BOM internal panel	31/01/2020	Luca Quaggia

Table of contents

F06_003

Page	Page type	Page description	Date	Edited by
=REP1/3,0.a	Parts list	BOM internal panel	31/01/2020	Luca Quaggia
=REP1/3,0.b	Parts list	BOM internal panel	31/01/2020	Luca Quaggia
=REP1/4,0	Parts list	BOM external panel	31/01/2020	Luca Quaggia

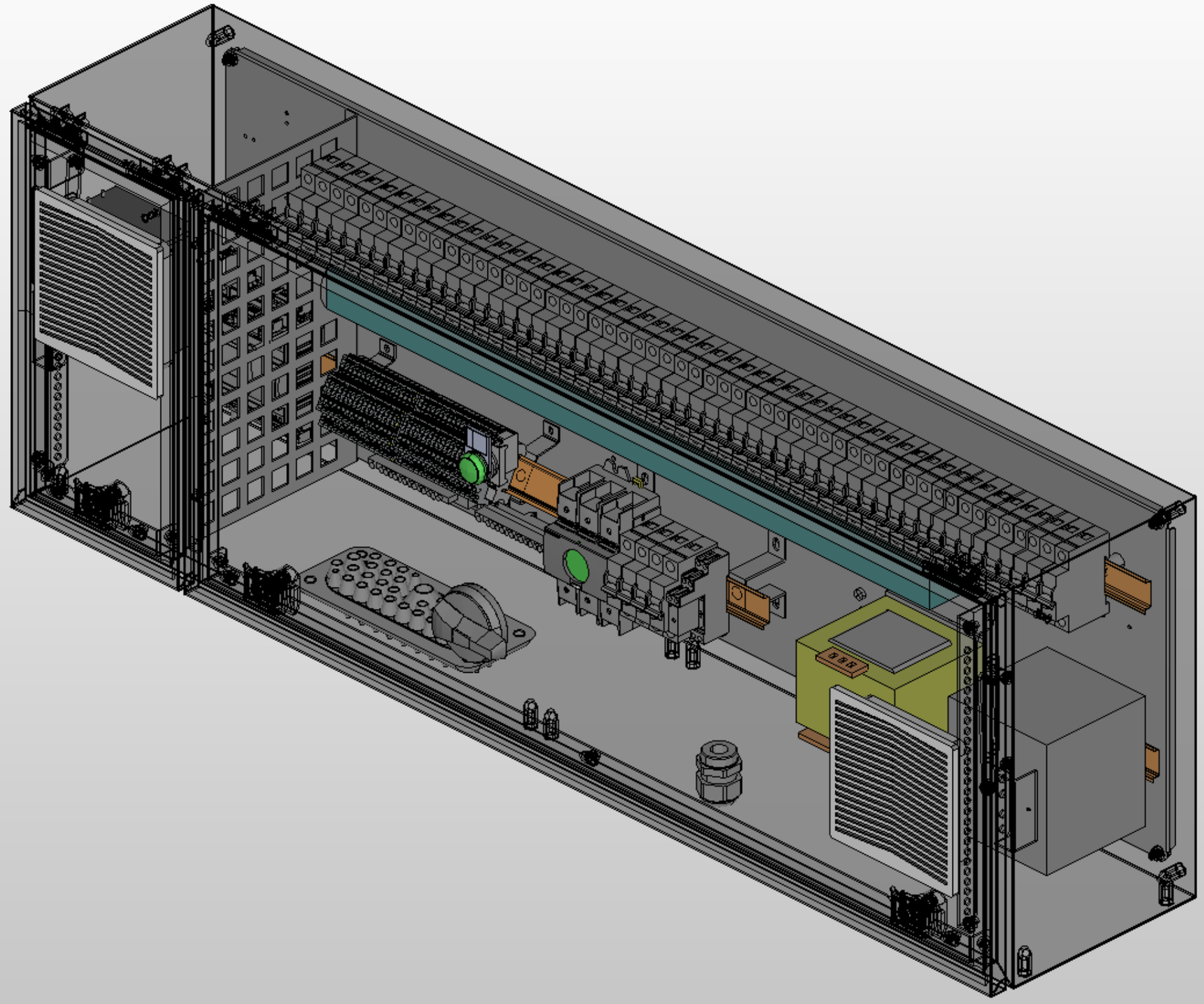

			Date	30/01/2015	CM00009389	ALFA LU-VE	General view	Mounting locations +	Page /4
			Elab.	Franco Meneghetti	EP 16 FANS ALFA-LUVE				Next 5
								Function =	Total pages 42
Modification	Date	Name							

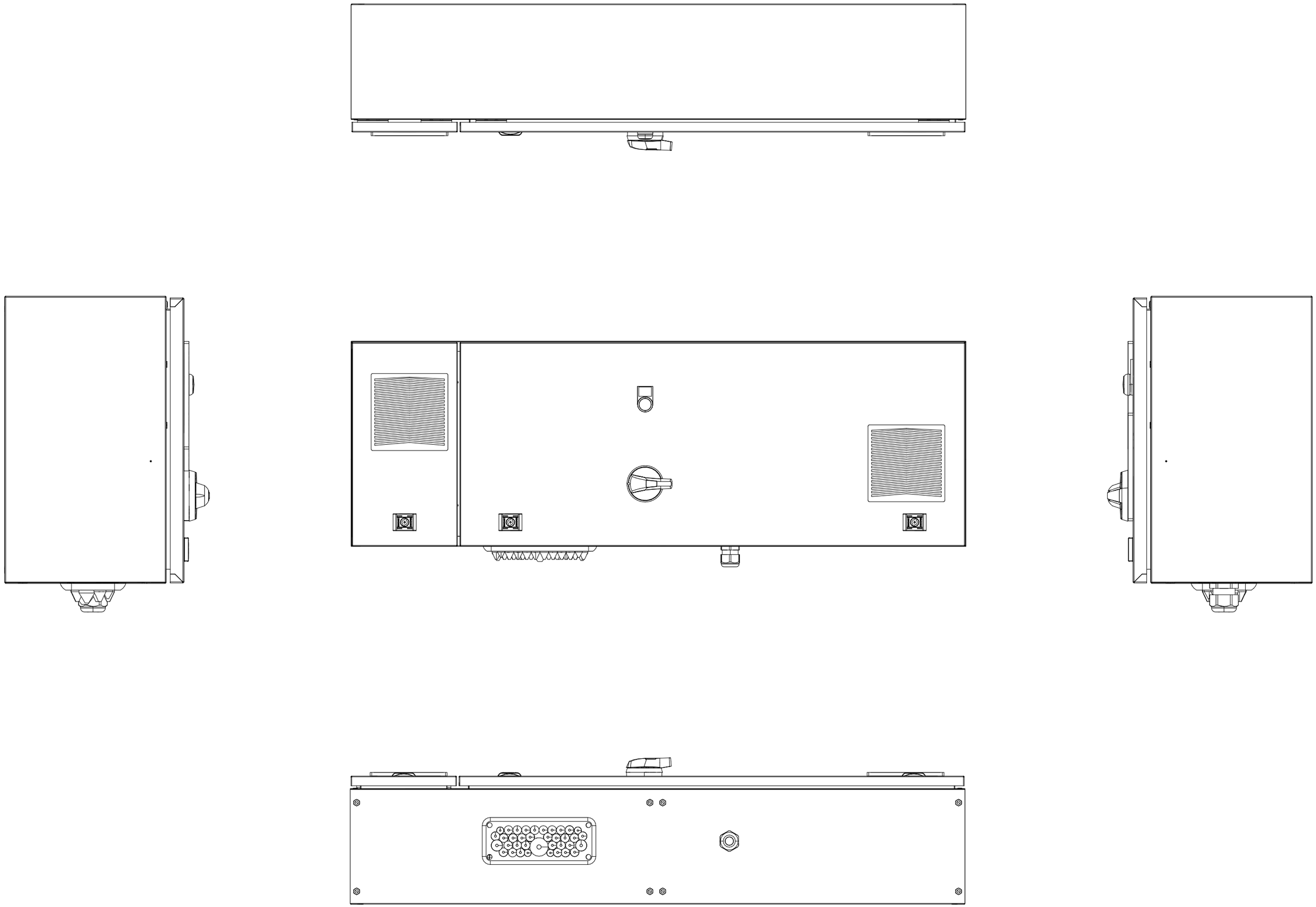

			Date	30/01/2015	CM00009389	ALFA LU-VE	View of all sides	Mounting locations +	Page /5
			Elab.	Franco Meneghetti	EP 16 FANS ALFA-LUVE				Next 6
								Function =	Total pages 42
Modification	Date	Name							

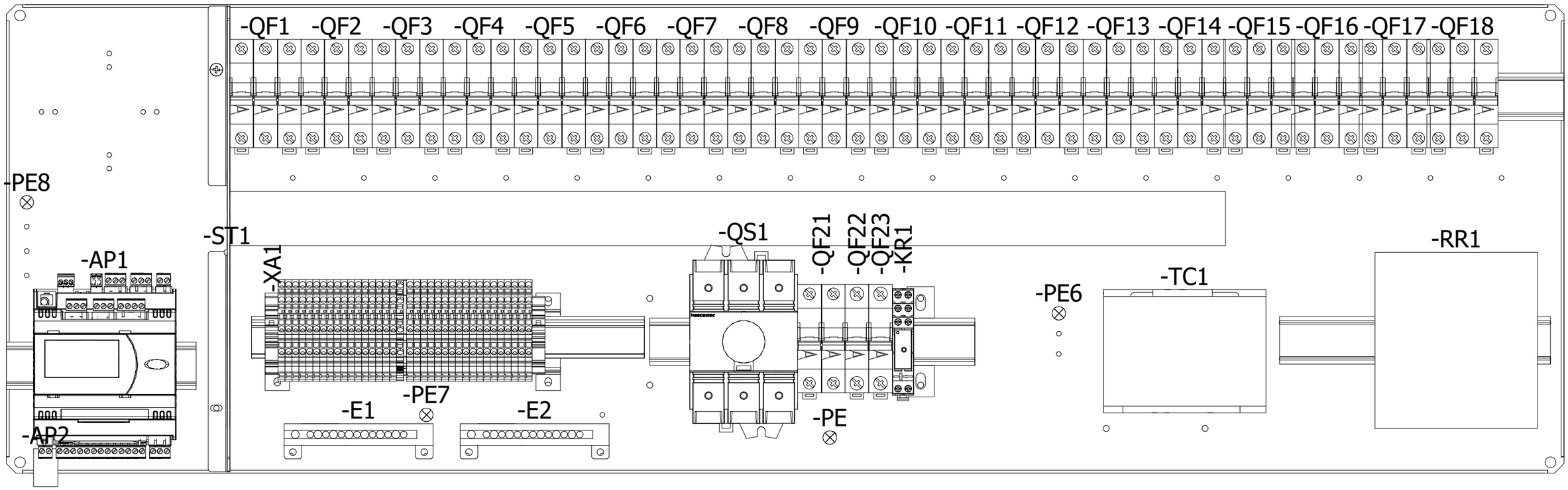

			Date	30/01/2015	CM00009389	ALFA LU-VE	Mounting plate view	Mounting locations +	Page /6
			Elab.	Franco Meneghetti	EP 16 FANS ALFA-LUVE				Next 7
								Function =	Total pages 42
Modification	Date	Name							

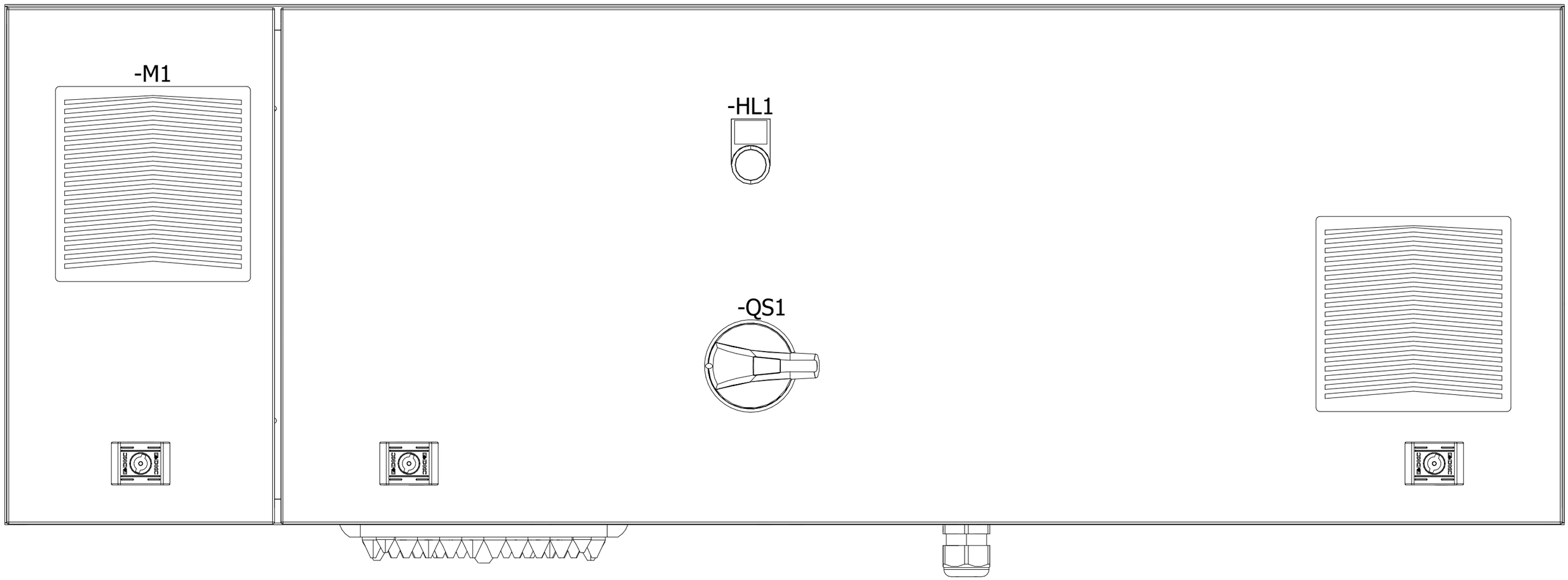

			Date	30/01/2015	CM00009389	ALFA LU-VE	Door view	Mounting locations +	Page /7
			Elab.	Franco Meneghetti	EP 16 FANS ALFA-LUVE				Next 8
								Function =	Total pages 42
Modification	Date	Name							

Layout guides and channels

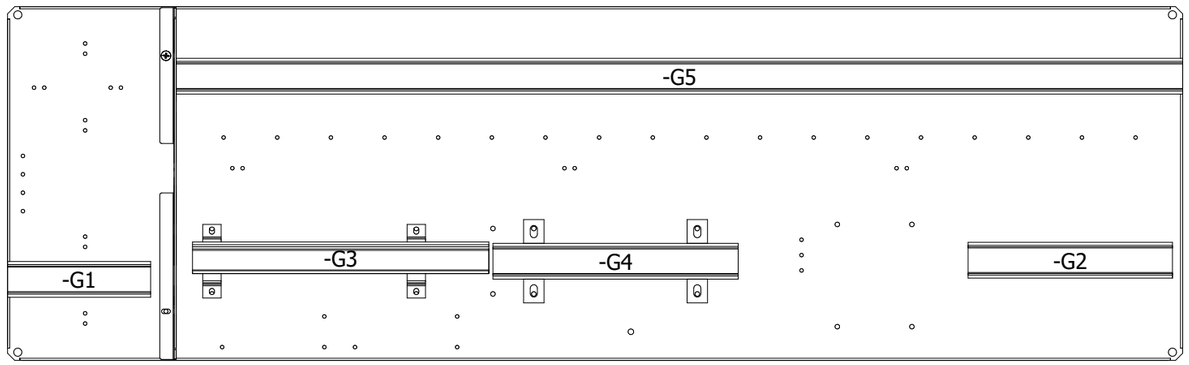

Sign	Type	Length (Tollerance -5mm)
U1	Inclined Bracket	
U2	Inclined Bracket	

G2	35x7.5	200 mm
G1	35x7.5	140 mm
G3	35x7.5	290 mm
G5	35x7.5	970 mm
G4	35x7.5	240 mm

U3	Staffa H=50mm	
U4	Staffa H=50mm	

U5	2cm Rise	
U6	2cm Rise	
U7	2cm Rise	

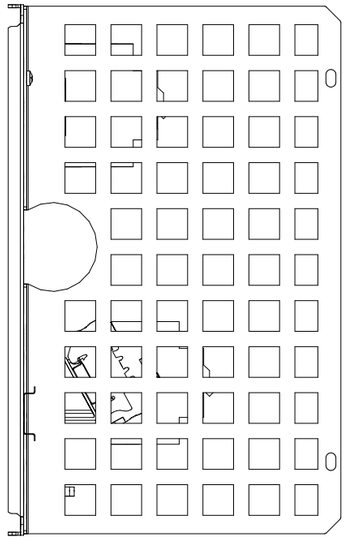

Empty

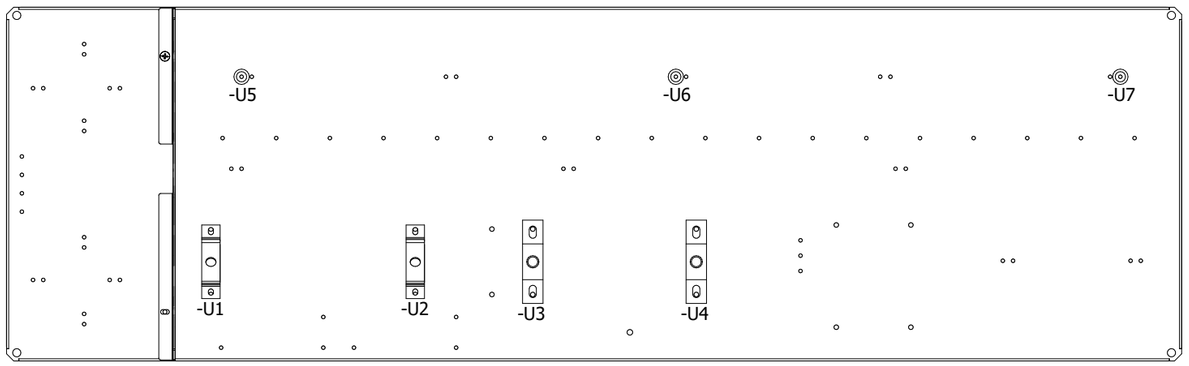

Empty

			Date	30/01/2015
			Elab.	Franco Meneghetti
Modification	Date	Name		

CM00009389

EP 16 FANS ALFA-LUVE

ALFA LU-VE

Guides view

Mounting locations +

Function =

Page /8

Next 9

Total pages 42

Layout guides and channels

Sign	Type	Length (Tollerance -5mm)
C1	40X40	720 mm

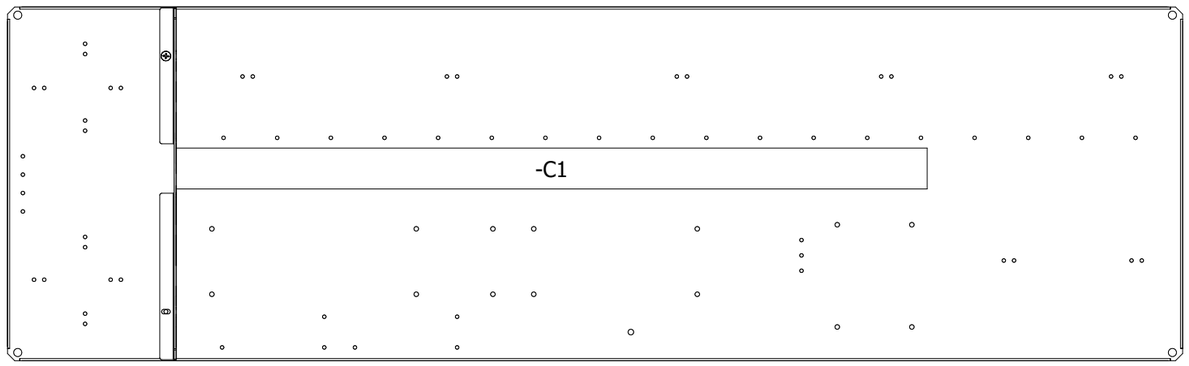

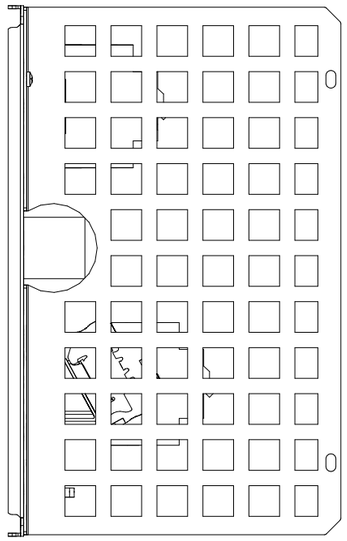

			Date	30/01/2015
			Elab.	Franco Meneghetti
Modification	Date	Name		

CM00009389

EP 16 FANS ALFA-LUVE

ALFA LU-VE

Channels view

Mounting locations +

Function =

Page /9

Next 10

Total pages 42

Cable entry/exit components

Item number	Component tipe	Drilling (Tollerance +-0.5mm)
1	M32 Gland	Ø 32.5mm
2	Passacavo multiforo	

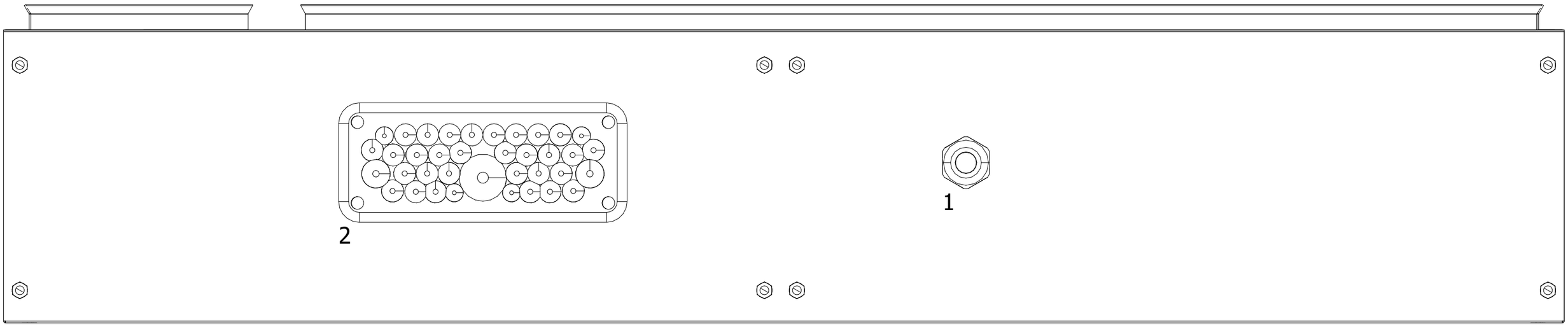

			Date	30/01/2015	CM00009389	ALFA LU-VE	Bottom view	Mounting locations +	Page /10
			Elab.	Franco Meneghetti	EP 16 FANS ALFA-LUVE				Next +QE/1
								Function =	Total pages 42
Modification	Date	Name							

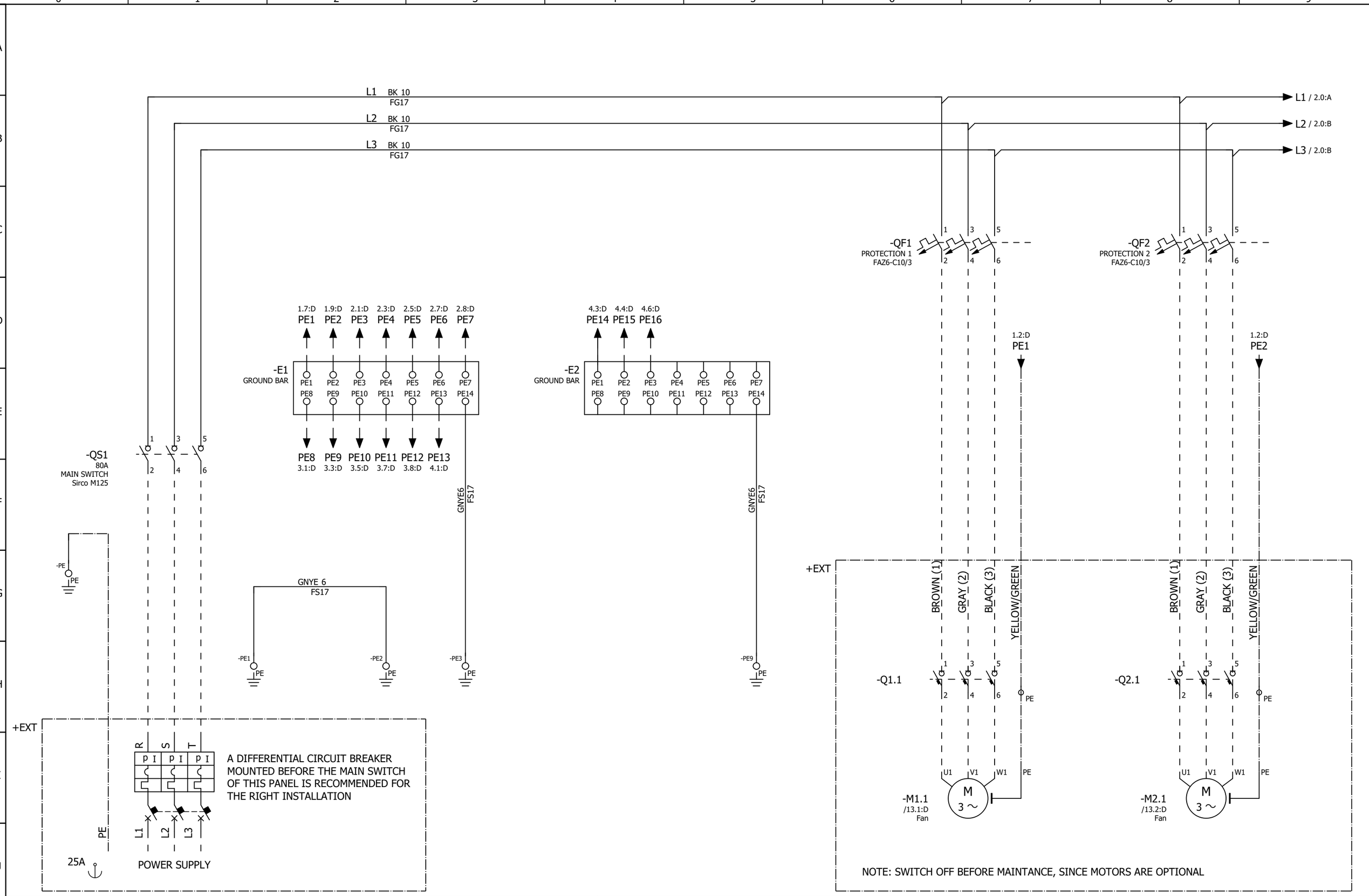

			Date	30/01/2015	CM00009389	ALFA LU-VE	Power circuit	Mounting locations + QE	Page +QE/1
			Elab.	Franco Meneghetti	EP 16 FANS ALFA-LUVE			Function =	Next 2
Modification	Date	Name							Total pages 42

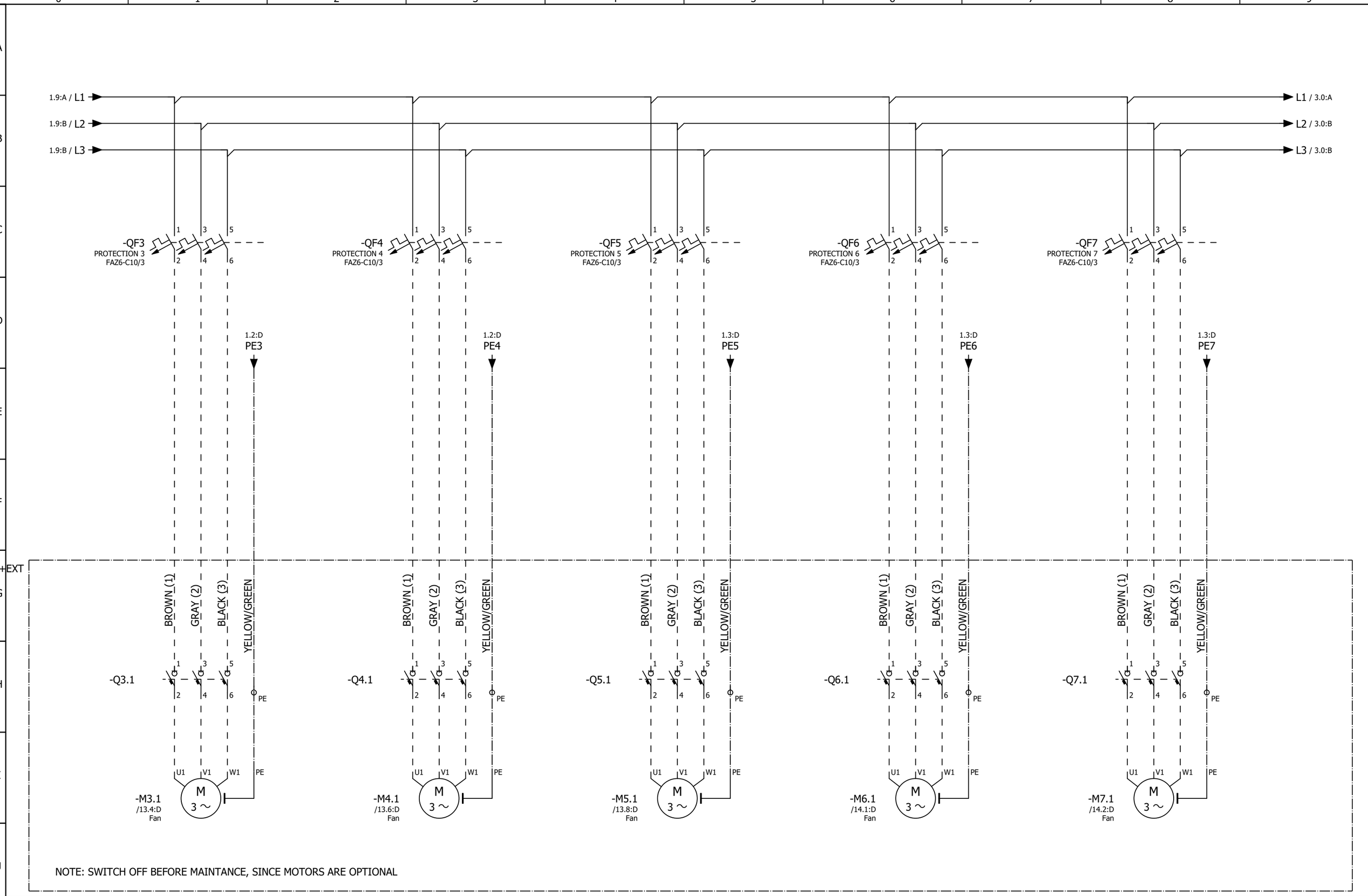

			Date	30/01/2015
			Elab.	Franco Meneghetti
Modification	Date	Name		

CM00009389

EP 16 FANS ALFA-LUVE

ALFA LU-VE

Power circuit

Mounting locations + QE

Function =

Page +QE/2

Next 3

Total pages 42

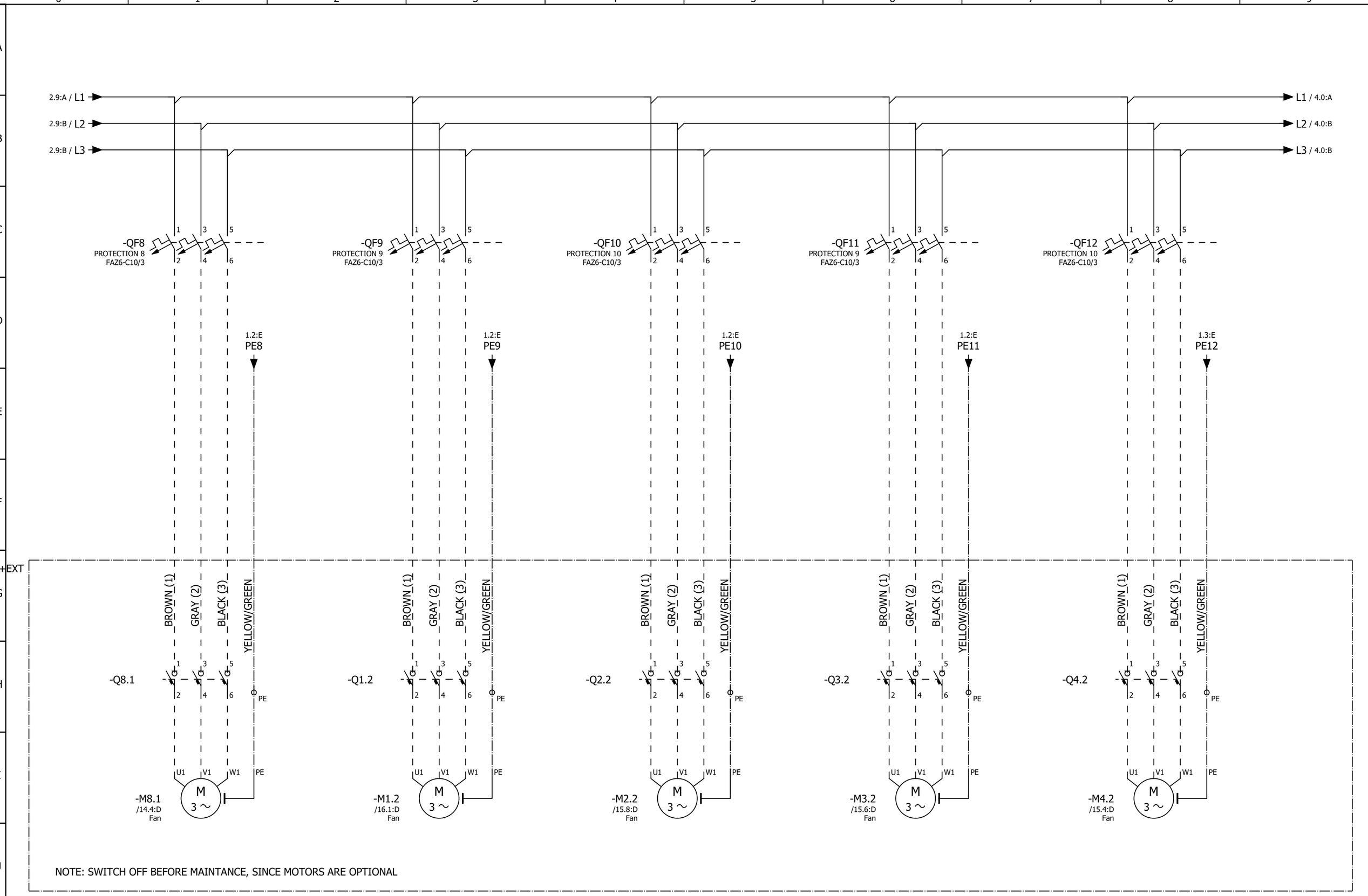

			Date	30/01/2015	CM00009389	ALFA LU-VE	Power circuit	Mounting locations + QE	Page +QE/3
			Elab.	Franco Meneghetti	EP 16 FANS ALFA-LUVE				Next 4
								Function =	Total pages 42
Modification	Date	Name							

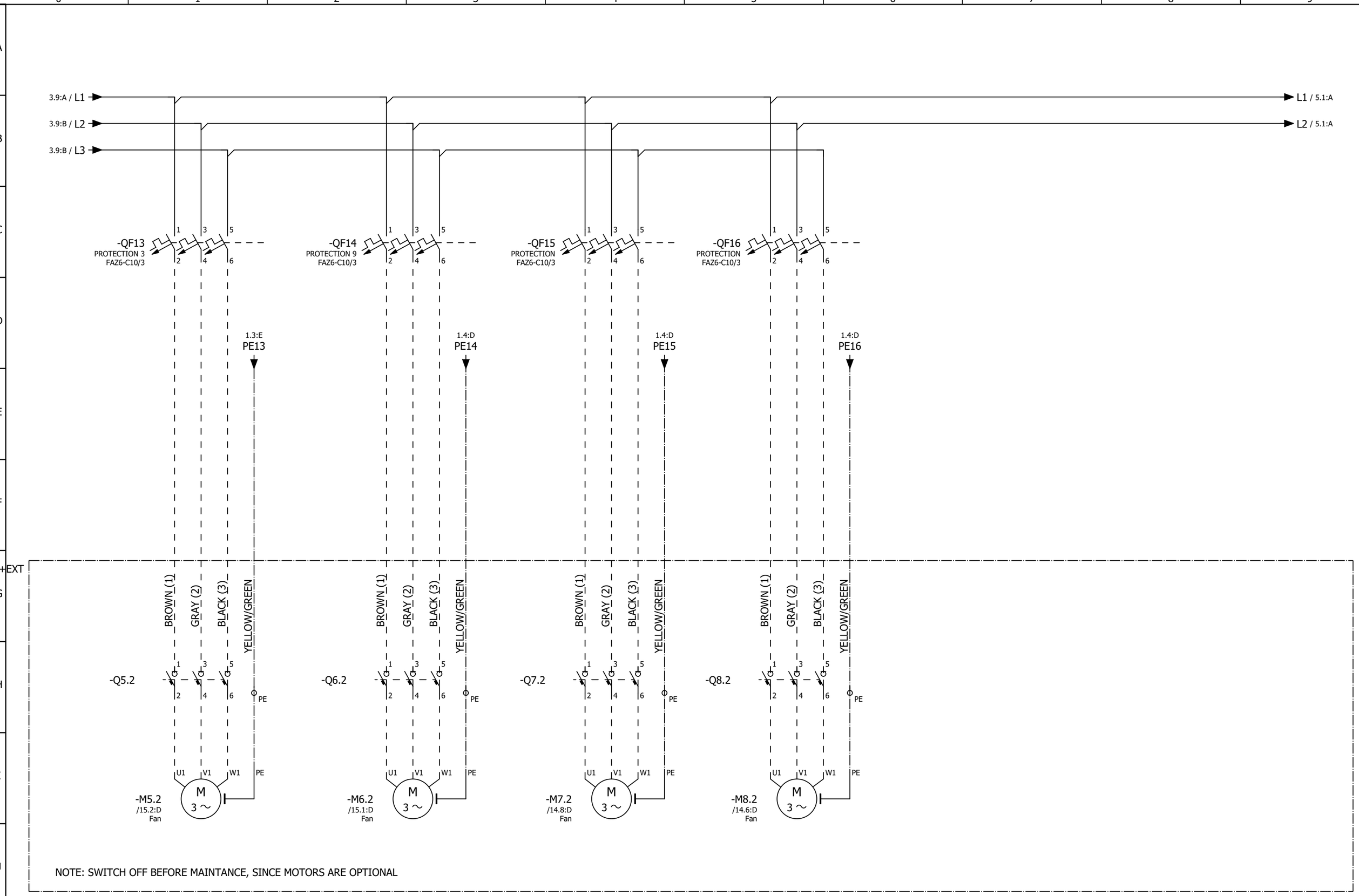

NOTE: SWITCH OFF BEFORE MAINTANCE, SINCE MOTORS ARE OPTIONAL

			Date	30/01/2015
			Elab.	Franco Meneghetti
Modification	Date	Name		

CM00009389

EP 16 FANS ALFA-LUVE

ALFA LU-VE

Power circuit

Mounting locations + QE

Function =

Page +QE/4

Next 5

Total pages 42

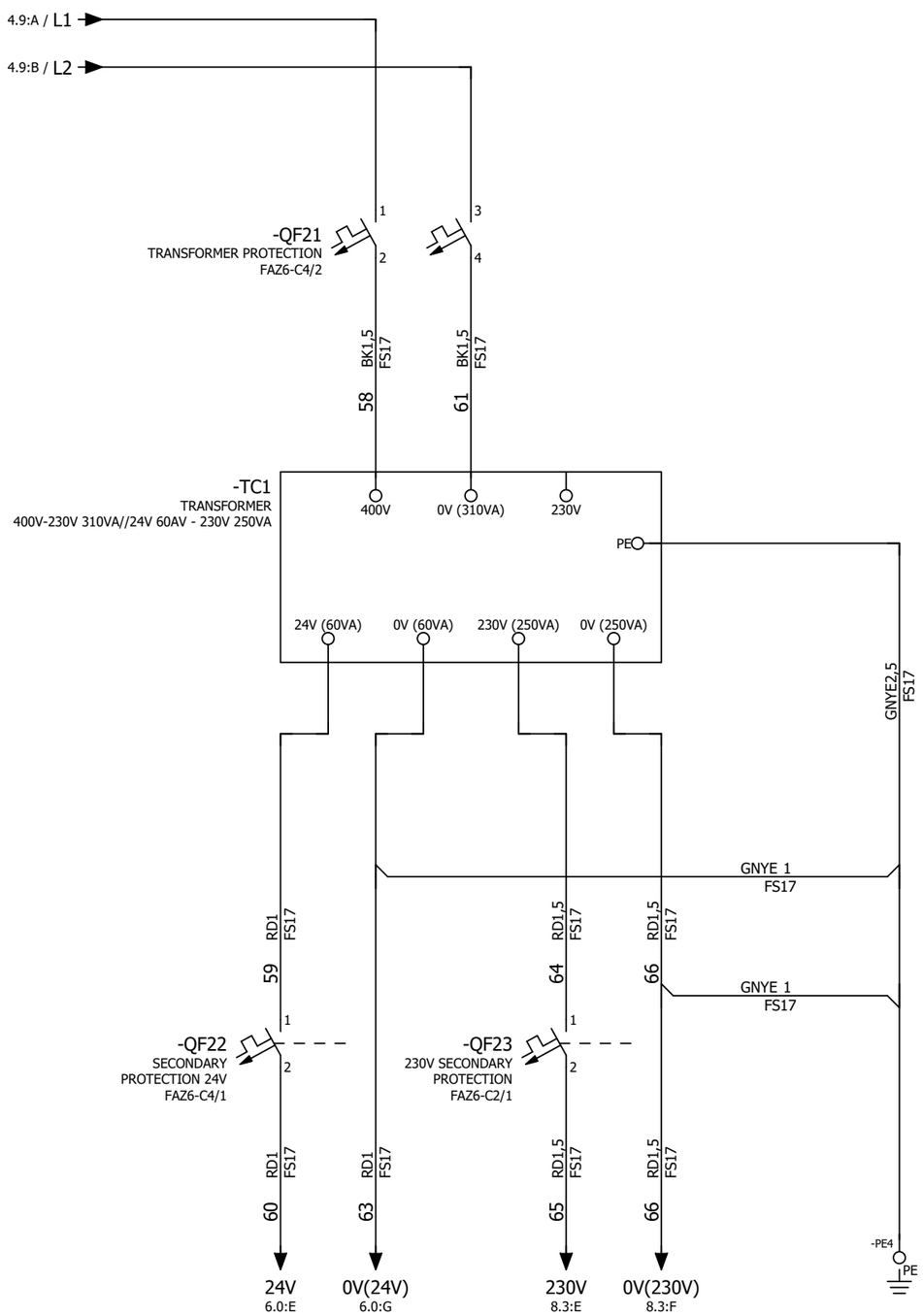

			Date	30/01/2015	CM00009389	ALFA LU-VE	Power circuit	Mounting locations + QE	Page +QE/5
			Elab.	Franco Meneghetti	EP 16 FANS ALFA-LUVE			Function =	Next 6
Modification	Date	Name							Total pages 42

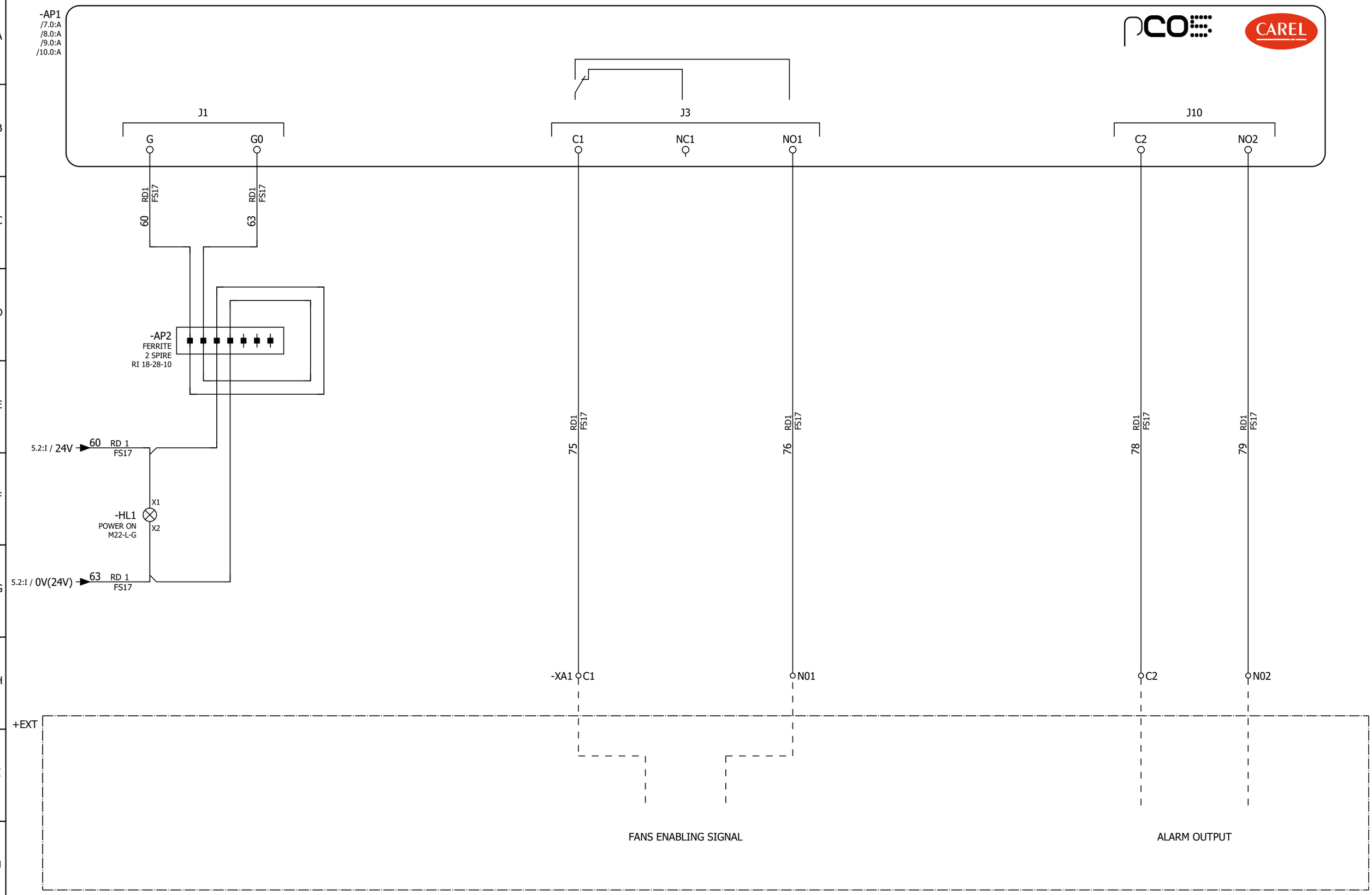

			Date	30/01/2015
			Elab.	Franco Meneghetti
Modification	Date	Name		

CM00009389

EP 16 FANS ALFA-LUVE

Auxiliary circuit

Mounting locations + QE

Function =

Page +QE/6

Next 7

Total pages 42

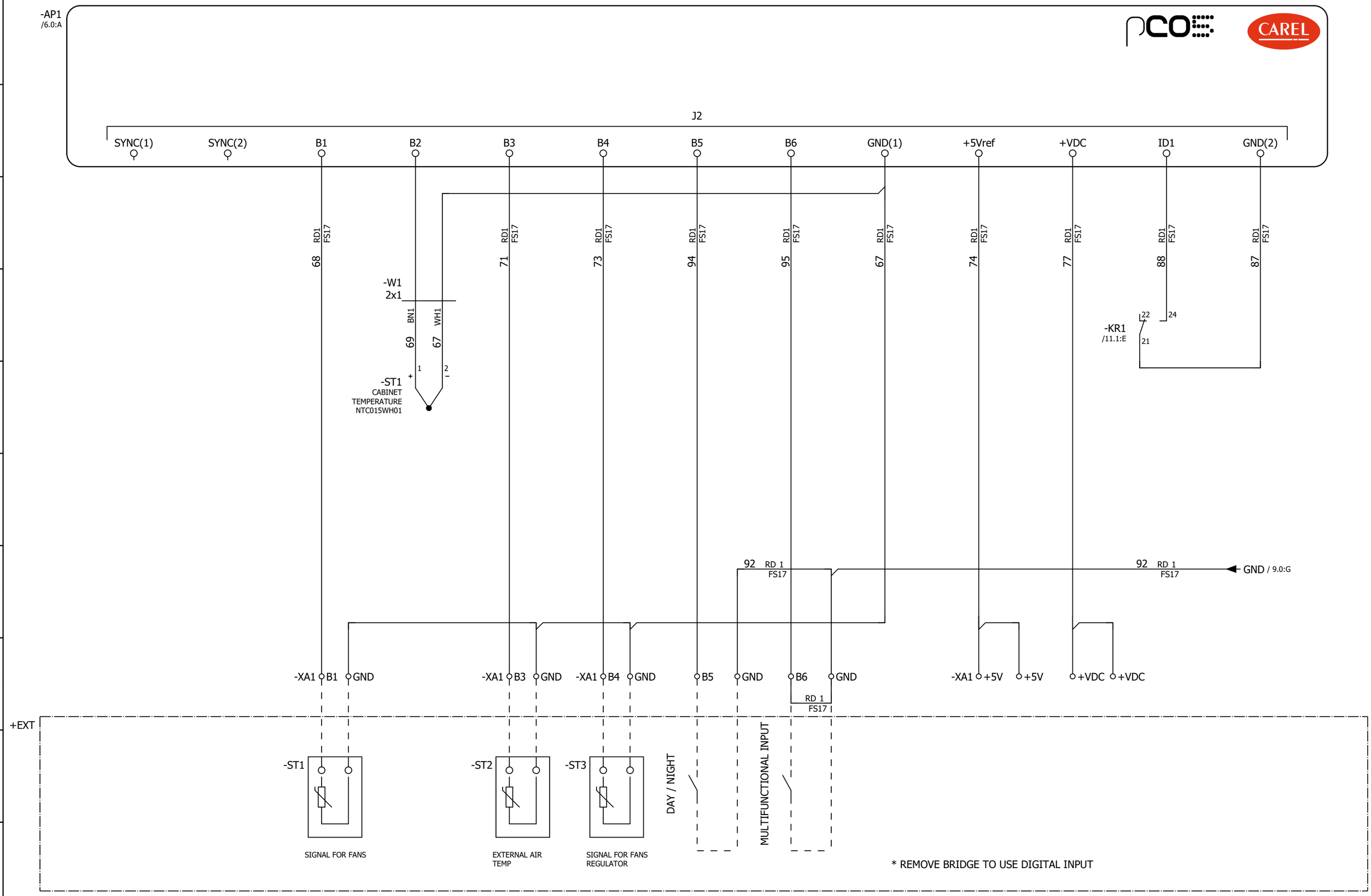

			Date	30/01/2015
			Elab.	Franco Meneghetti
Modification	Date	Name		

CM00009389

EP 16 FANS ALFA-LUVE

Auxiliary circuit

Mounting locations + QE

Function =

Page +QE/7

Next 7.a

Total pages 42

NO PT1000
B1 SIGNAL FOR FANS (NTC)
B2 E.P. TEMPERATURE (NTC)
B3 EXTERNAL AIR TEMPERATURE (NTC)
B4 ----------

WITH PT1000
B1 ----------
B2 E.P. TEMPERATURE (NTC)
B3 EXTERNAL AIR TEMPERATURE (NTC)
B4 SIGNAL FOR FANS (PT1000)

PROBE CONNECTIONS

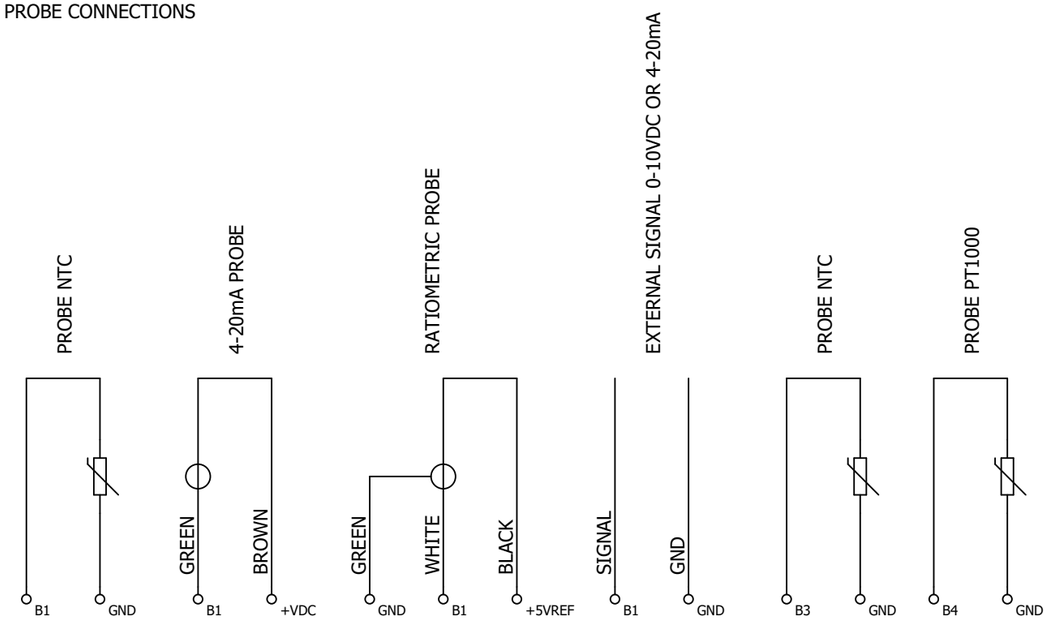

			Date	30/01/2015
			Elab.	Franco Meneghetti
Modification	Date	Name		

CM00009389

EP 16 FANS ALFA-LUVE

ALFA LU-VE

Auxiliary circuit

Mounting locations + QE

Function =

Page +QE/7.a

Next 8

Total pages 42

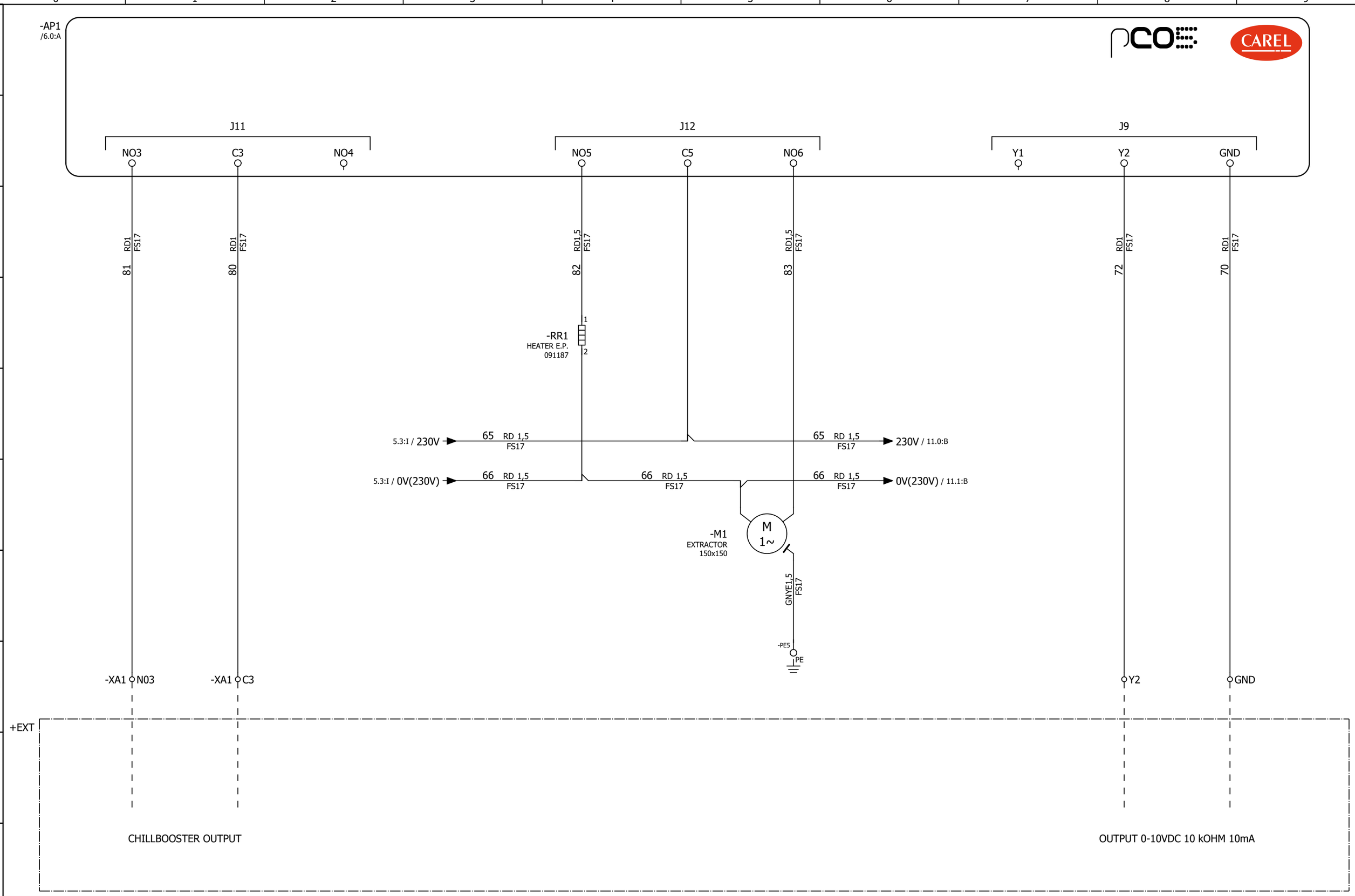

			Date	30/01/2015
			Elab.	Franco Meneghetti
Modification	Date	Name		

CM00009389

EP 16 FANS ALFA-LUVE

Auxiliary circuit

Mounting locations + QE

Function =

Page +QE/8

Next 9

Total pages 42

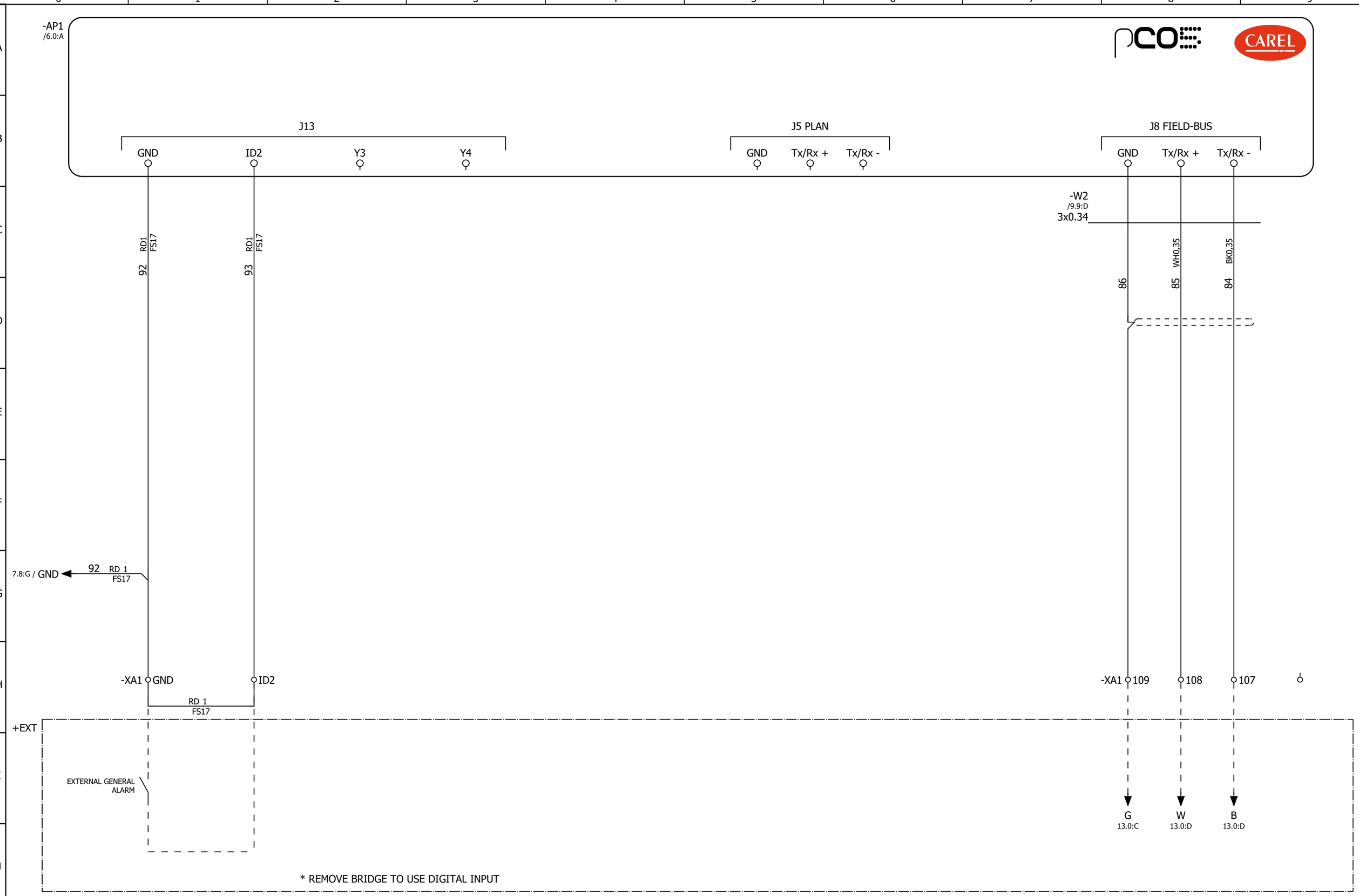

			Date	30/01/2015
			Elab.	Franco Meneghetti
Modification	Date	Name		

CM00009389

EP 16 FANS ALFA-LUVE

Auxiliary circuit

Mounting locations	+ QE
Function	=
Page	+QE/9
Next	10
Total pages	42

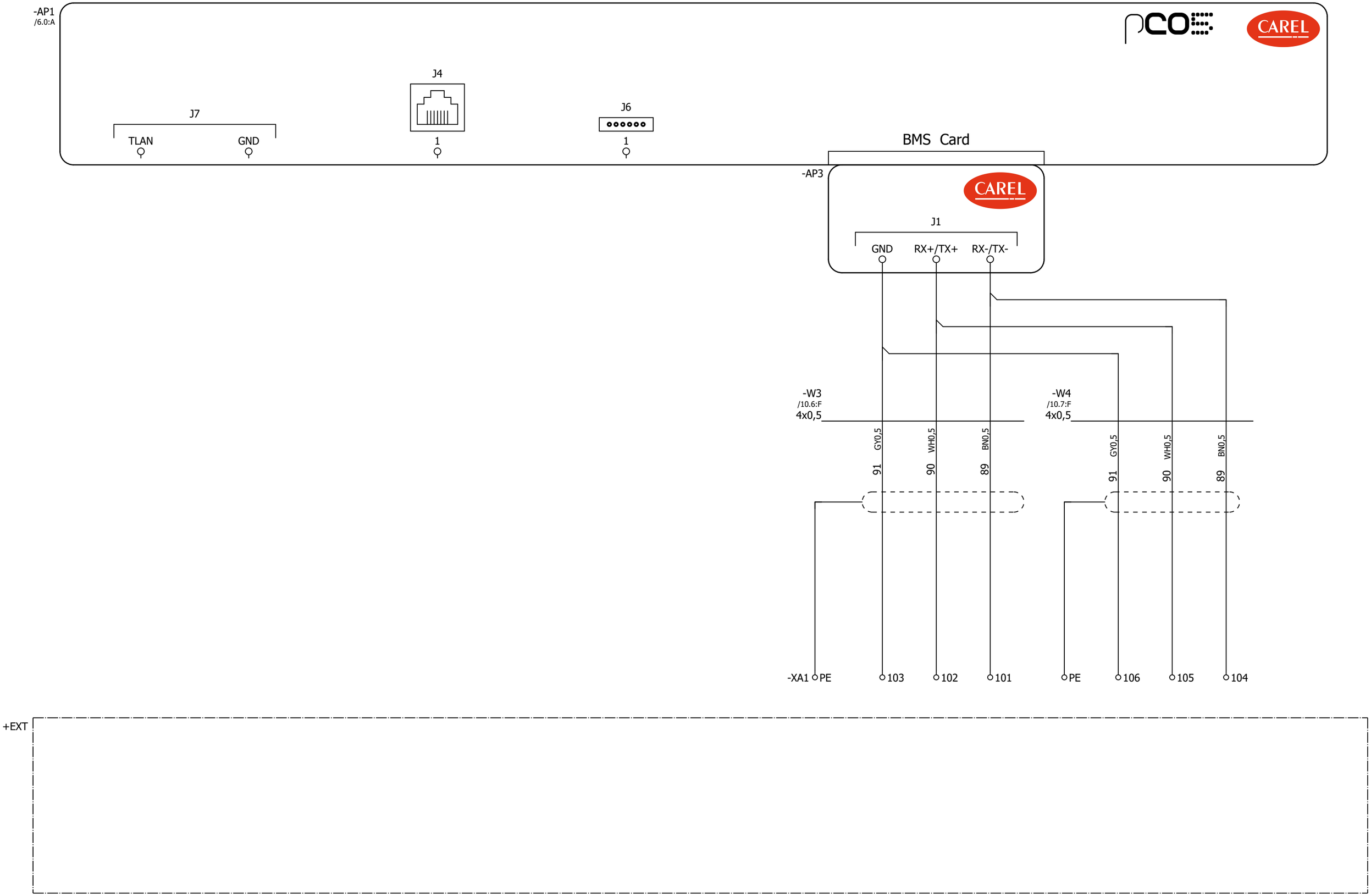

			Date	30/01/2015	CM00009389	Auxiliary circuit	Mounting locations + QE	Page +QE/10
			Elab.	Franco Meneghetti	EP 16 FANS ALFA-LUVE			Next 11
							Function =	Total pages 42
Modification	Date	Name						

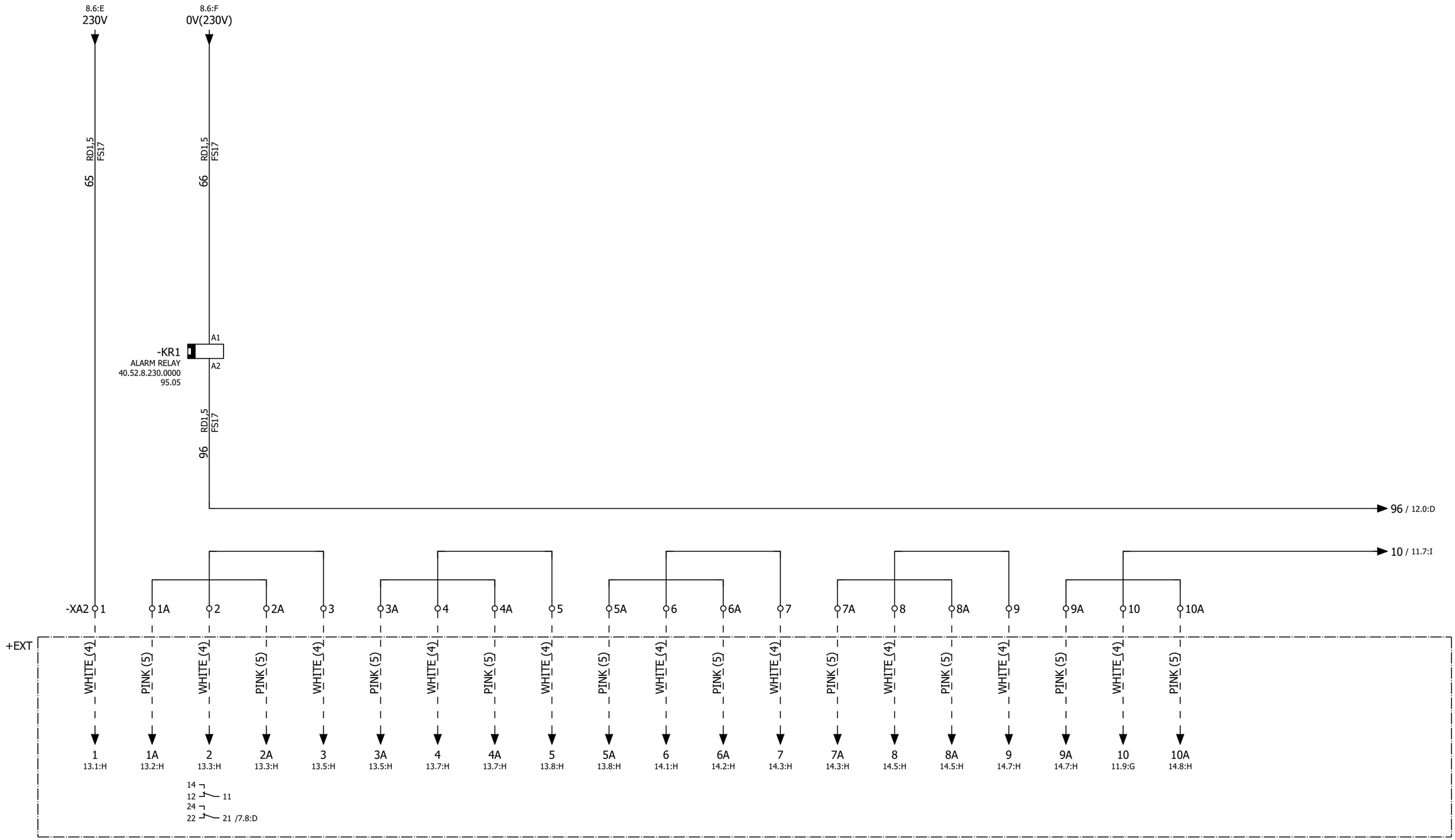

			Date	30/01/2015	CM00009389	ALFA LU-VE	Auxiliary circuit	Mounting locations + QE	Page +QE/11
			Elab.	Franco Meneghetti	EP 16 FANS ALFA-LUVE			Function =	Next 12
Modification	Date	Name							Total pages 42

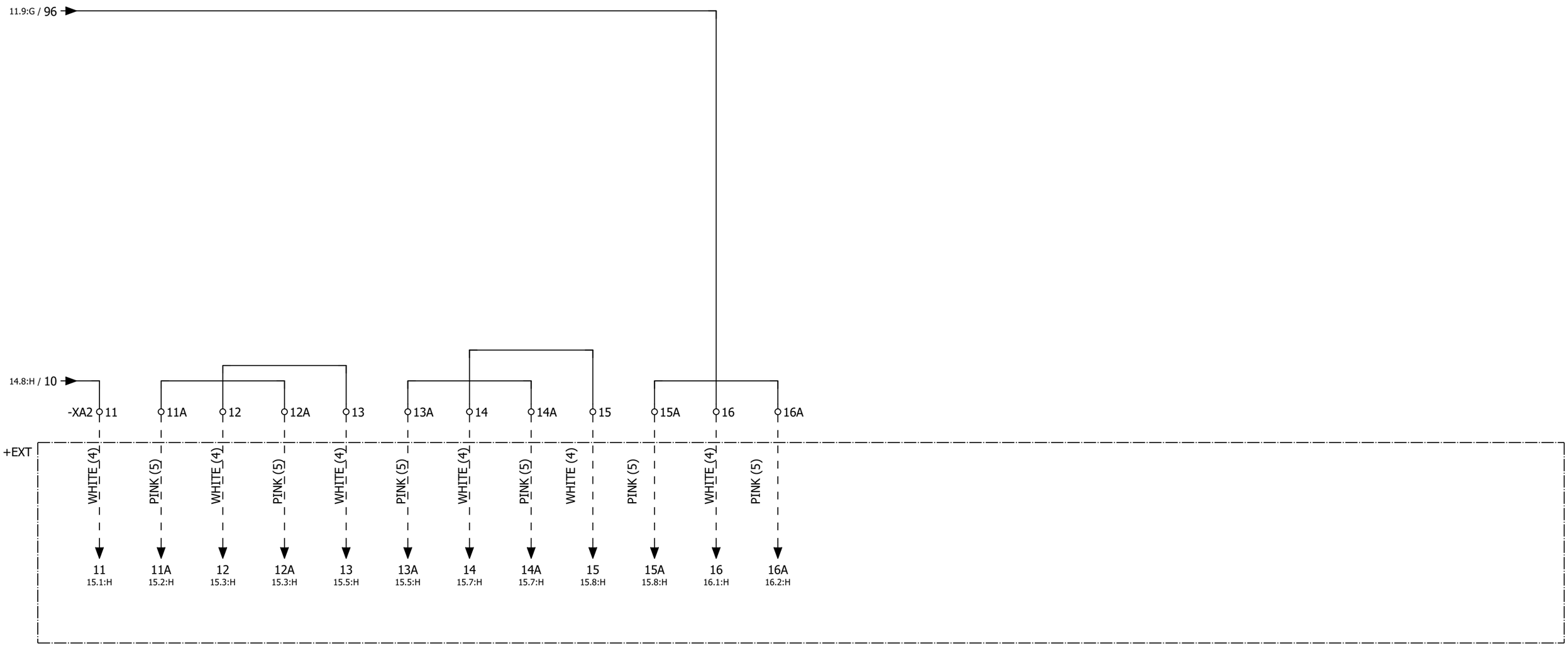

			Date	30/01/2015	CM00009389	ALFA LU-VE	Auxiliary circuit	Mounting locations + QE	Page +QE/12
			Elab.	Franco Meneghetti	EP 16 FANS ALFA-LUVE				Next 13
								Function =	Total pages 42
Modification	Date	Name							

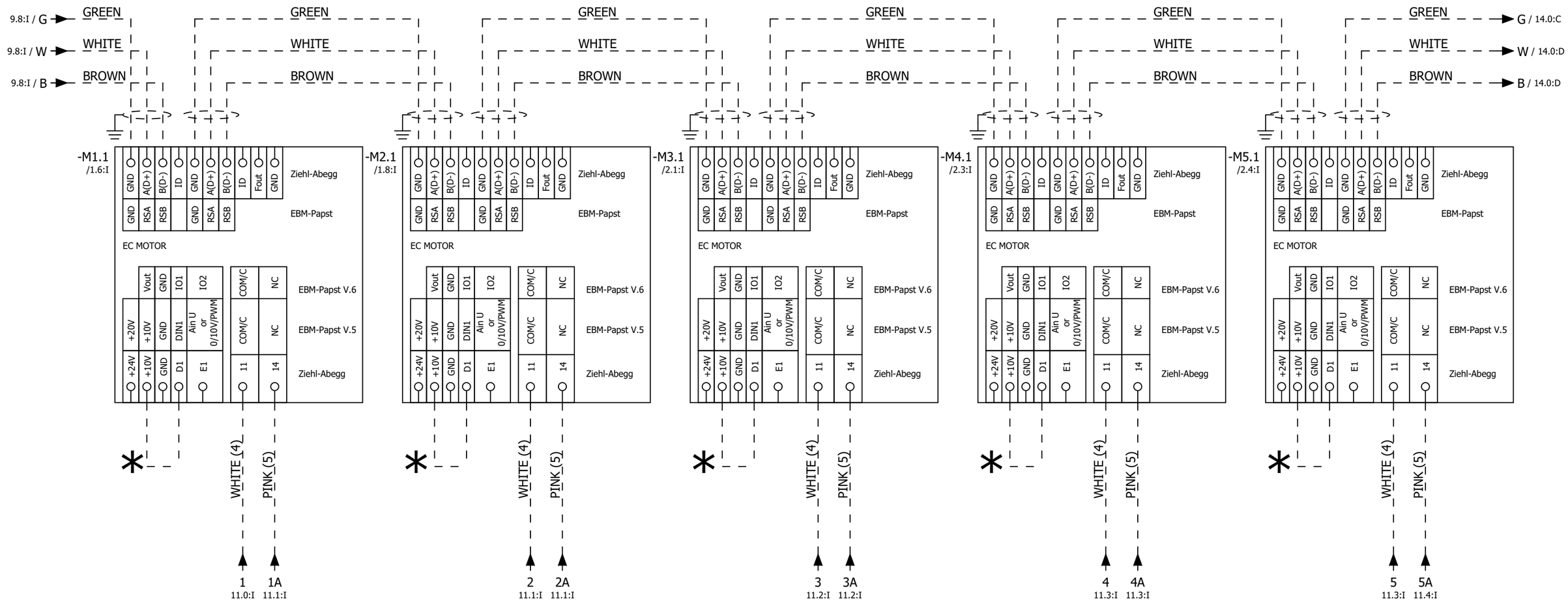

* CONNECTION NEEDED ONLY FOR ZIEHL-ABBEGG FANS

			Date	30/01/2015	CM00009389	ALFA LU-VE	Auxiliary circuit	Mounting locations + QE	Page +QE/13
			Elab.	Franco Meneghetti	EP 16 FANS ALFA-LUVE			Function =	Next 14
Modification	Date	Name							Total pages 42

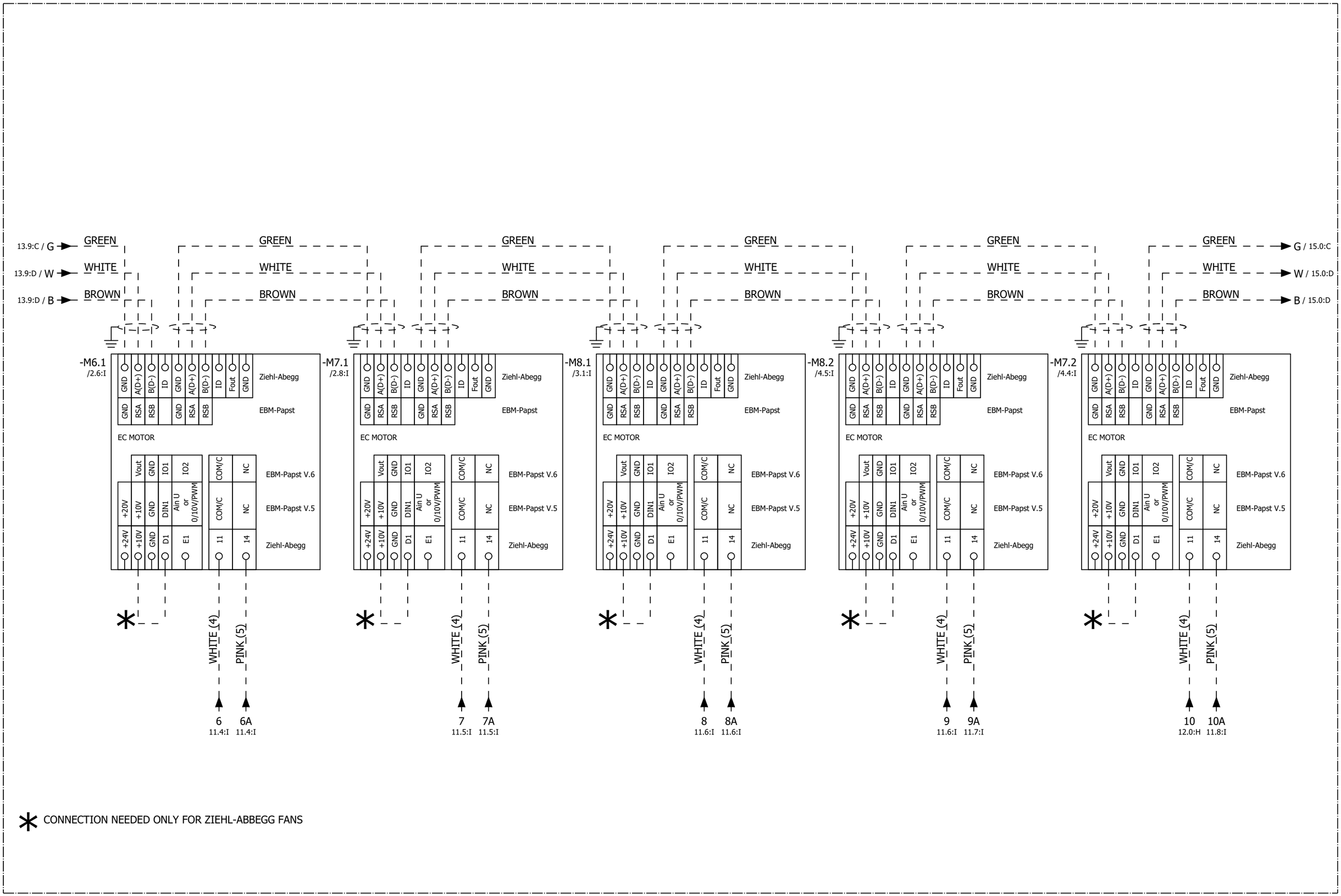

			Date	30/01/2015	CM00009389	ALFA LU-VE	Auxiliary circuit	Mounting locations + QE
			Elab.	Franco Meneghetti	EP 16 FANS ALFA-LUVE			Function =
Modification	Date	Name						

Page	+QE/14
Next	15
Total pages	42

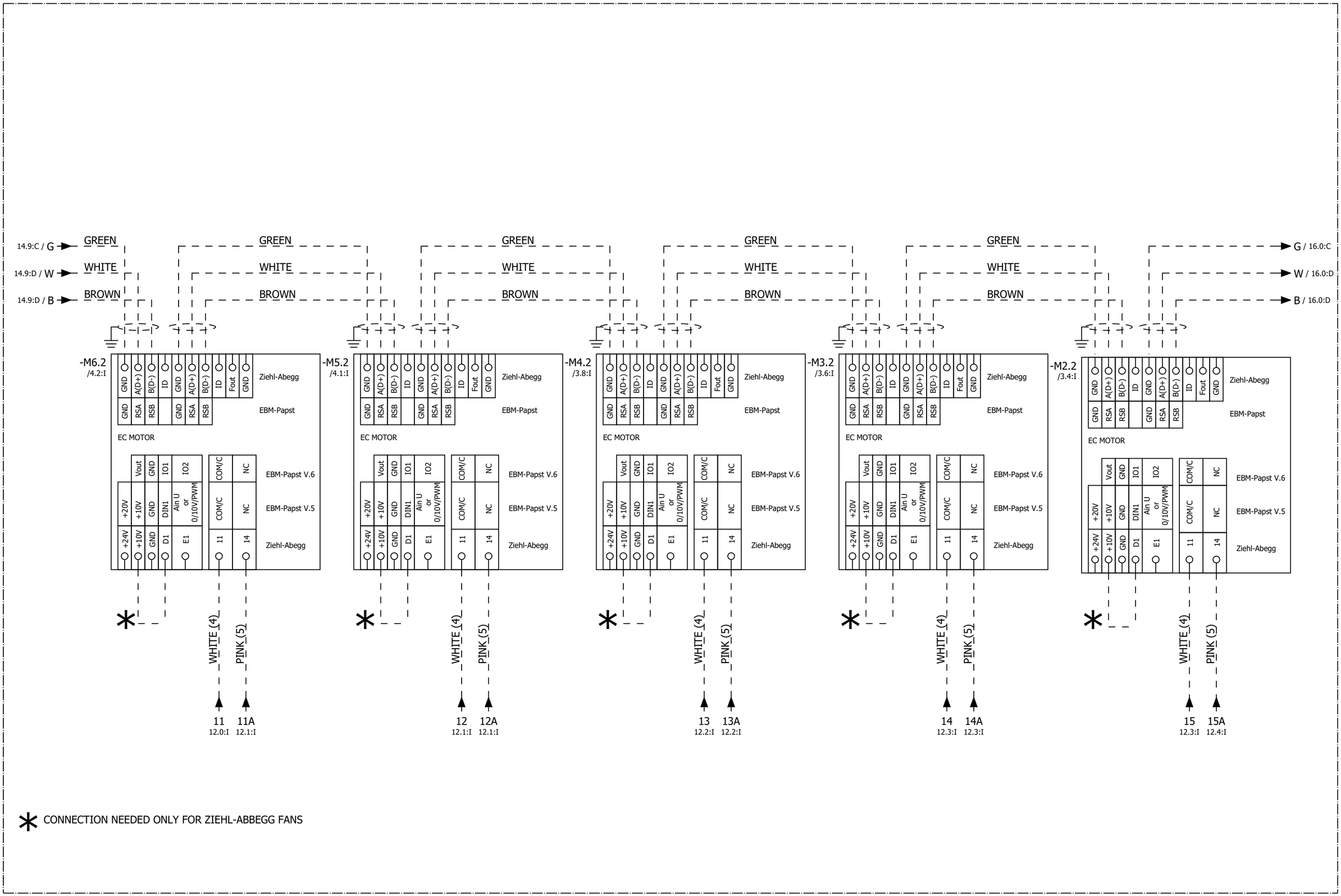

			Date	30/01/2015
			Elab.	Franco Meneghetti
Modification	Date	Name		

CM00009389

EP 16 FANS ALFA-LUVE

ALFA LU-VE

Auxiliary circuit

Mounting locations + QE

Function =

Page +QE/15

Next 16

Total pages 42

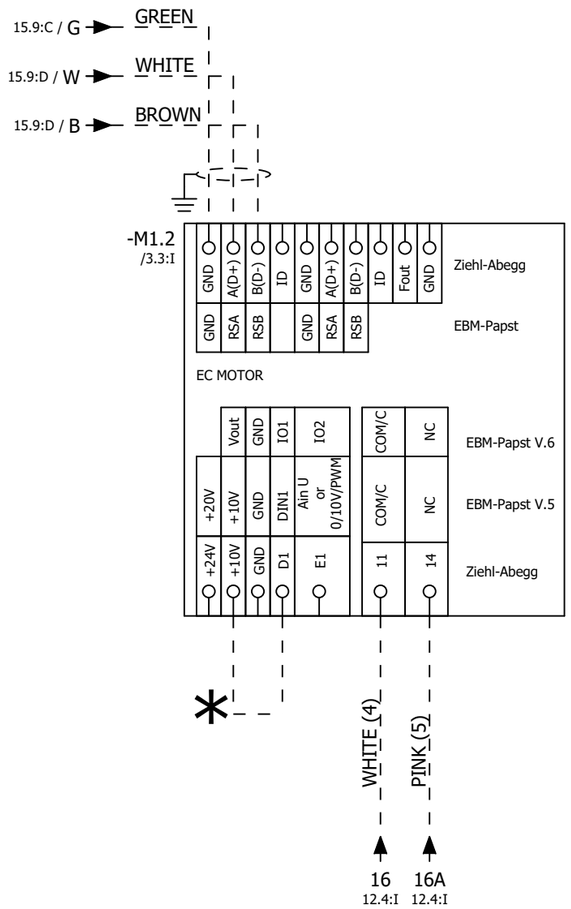

* CONNECTION NEEDED ONLY FOR ZIEHL-ABBEGG FANS

			Date	30/01/2015	CM00009389	ALFA LU-VE	Auxiliary circuit	Mounting locations + QE	Page +QE/16
			Elab.	Franco Meneghetti	EP 16 FANS ALFA-LUVE			Function =	Next 17
Modification	Date	Name							Total pages 42

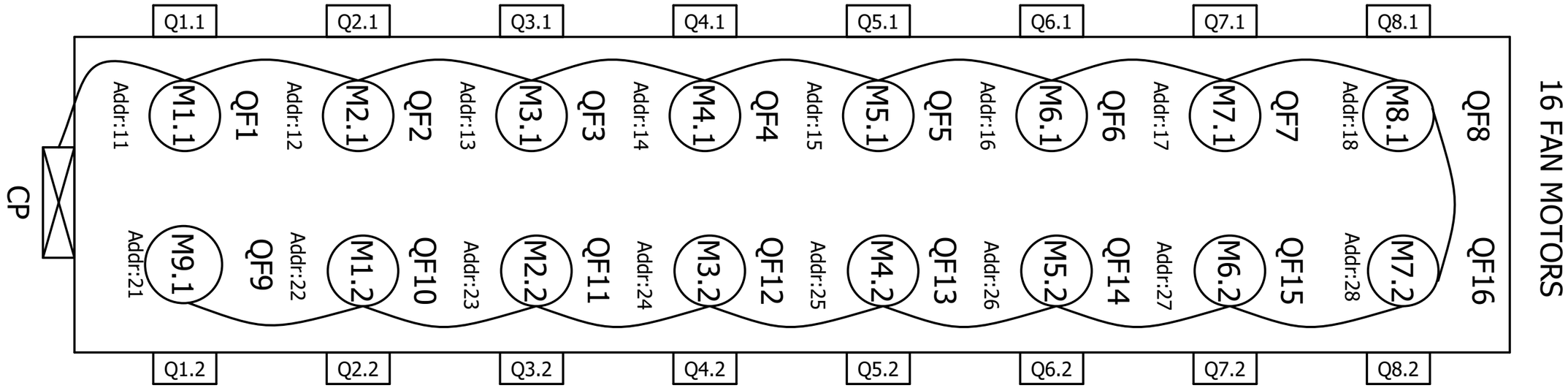

			Date	30/01/2015	CM00009389	ALFA LU-VE	Serial connection	Mounting locations + QE	Page +QE/17
			Elab.	Franco Meneghetti	EP 16 FANS ALFA-LUVE				Next 18
								Function =	Total pages 42
Modification	Date	Name							

CAREL INDUSTRIES S.p.A. - Società Unipersonale
Via dell'Industria, 11 - 35020 Brugine – Padova – Italia
Tel. (+39) 049.9716611 – Fax (+39) 049.9716600
www.carel.com – e-mail: carel@carel.com
Cap. Soc. € 10.000.000 i.v.
C.C.I.A.A. Padova Reg. Imp n. 4359090281
Part. IVA e Cod. Fisc. 04359090281
Società soggetta ad attività di direzione e coordinamento di Carel S.p.A.

CE

EU Declaration of Conformity

Manufacturer: **CAREL Industries S.p.A.**
Via dell'Industria, 11 35020 Brugine (PD) Italy

Electric Control Panels series Carel Power Solutions
Code :
Serial number:

CM00009389 / CM00009568

The manufacturer declares that all the above indicated products are in accordance with the EU Directives:

2006/95/EC (LVD)

and comply with the requirements of the following European standards:

EN 60204-1

Brugine, 01/09/2015

CAREL INDUSTRIES S.p.A.
Technical Director

Ing. Umberto Bianchini

Modification	Date	Name		Date	30/01/2015
			Elab.	Franco Meneghetti	

CM00009389
EP 16 FANS ALFA-LUVE

ALFA LU-VE

Certificazione

Mounting locations + QE	Page +QE/18
Function =	Next =REP1+/1,0
	Total pages 42

Multicore cables scheme

Cable type PROBE CABLE

Oracle code PROBE CABLE

Total Cable Length Cut:

Departure | Cross ref. | Terminator

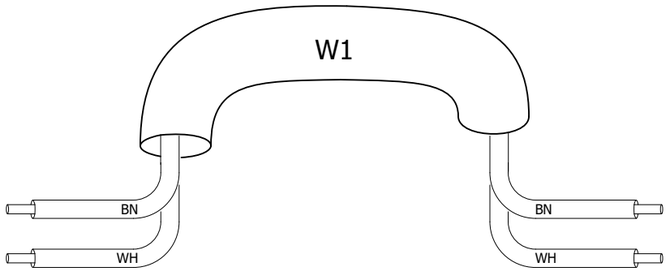

Terminator | Cross ref. | Arrival

Unsheathing cable departure

Unsheathing cable arrival

			Date	30/01/2015	CM00009389	Multicore cables scheme	Mounting locations +
			Elab.	Franco Meneghetti	EP 16 FANS ALFA-LUVE		Function =REP1
Modification	Date	Name					

ALFA LU-VE

Page	=REP1/1,0
Next	1,1
Total pages	42

Multicore cables scheme

Cable type Belden

Oracle code 1008176AXX

Total Cable Length Cut:

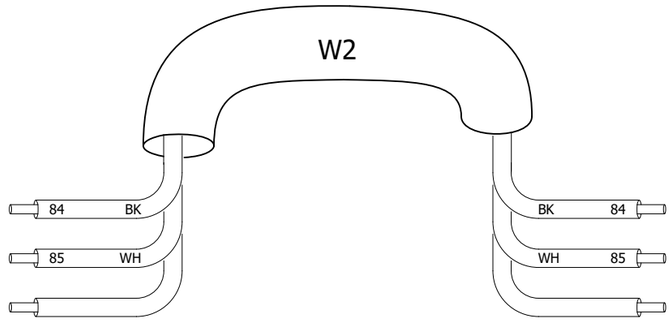

Departure	Cross ref.	Terminator	Terminator	Cross ref.	Arrival
XA1:107:A	+QE/9.8:H			+QE/9.8:B	+QE-AP1:J8 FIELD-BUS:Tx/Rx -
XA1:108:B	+QE/9.8:H			+QE/9.8:B	+QE-AP1:J8 FIELD-BUS:Tx/Rx +

Unsheathing cable departure

Unsheathing cable arrival

			Date	30/01/2015
			Elab.	Franco Meneghetti
Modification	Date	Name		

CM00009389

EP 16 FANS ALFA-LUVE

ALFA LU-VE

Multicore cables scheme

Mounting locations +

Function =REP1

Page =REP1/1,1

Next 1,2

Total pages 42

Multicore cables scheme

Cable type Shielded 3x0.5

Oracle code 1008019AXX

Total Cable Length Cut:

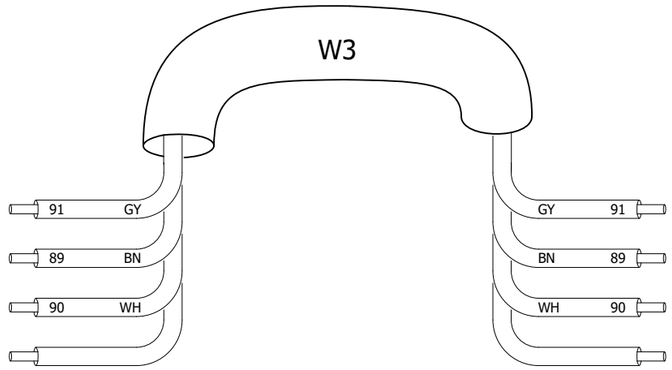

Departure	Cross ref.	Terminator	Terminator	Cross ref.	Arrival
XA1:103:A	+QE/10.6:H			+QE/10.6:C	+QE-AP3:J1:GND
XA1:101:A	+QE/10.7:H			+QE/10.7:C	+QE-AP3:J1:RX-/TX-
XA1:102:B	+QE/10.6:H			+QE/10.6:C	+QE-AP3:J1:RX+/TX+
XA1:PE:B	+QE/10.5:H			+QE/10.5:E	W3

Unsheathing cable departure

Unsheathing cable arrival

			Date	30/01/2015	CM00009389	ALFA LU-VE	Multicore cables scheme	Mounting locations +	Page =REP1/1,2
			Elab.	Franco Meneghetti	EP 16 FANS ALFA-LUVE				Next 1,3
								Function =REP1	Total pages 42
Modification	Date	Name							

Multicore cables scheme

Cable type Shielded 3x0.5

Oracle code 1008019AXX

Total Cable Length Cut:

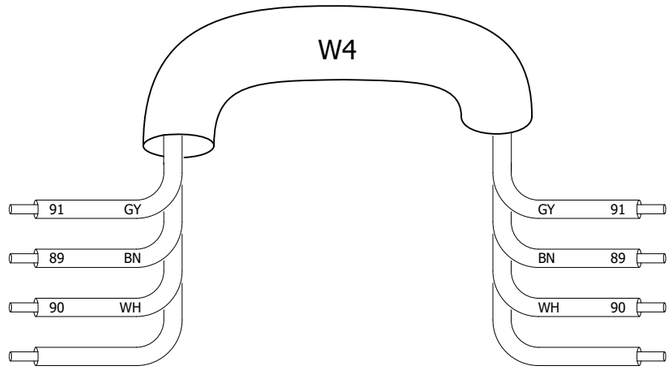

Departure	Cross ref.	Terminator	Terminator	Cross ref.	Arrival
XA1:106:B	+QE/10.8:H			+QE/10.6:C	+QE-AP3:J1:GND
XA1:104:B	+QE/10.8:H			+QE/10.7:C	+QE-AP3:J1:RX-/TX-
XA1:105:A	+QE/10.8:H			+QE/10.6:C	+QE-AP3:J1:RX+/TX+
XA1:PE:A	+QE/10.7:H			+QE/10.7:E	W4

Unsheathing cable departure

Unsheathing cable arrival

			Date	30/01/2015	CM00009389	ALFA LU-VE	Multicore cables scheme	Mounting locations +	Page =REP1/1,3
			Elab.	Franco Meneghetti	EP 16 FANS ALFA-LUVE				Next 2,0
								Function =REP1	Total pages 42
Modification	Date	Name							

Terminal diagram

Terminal strip

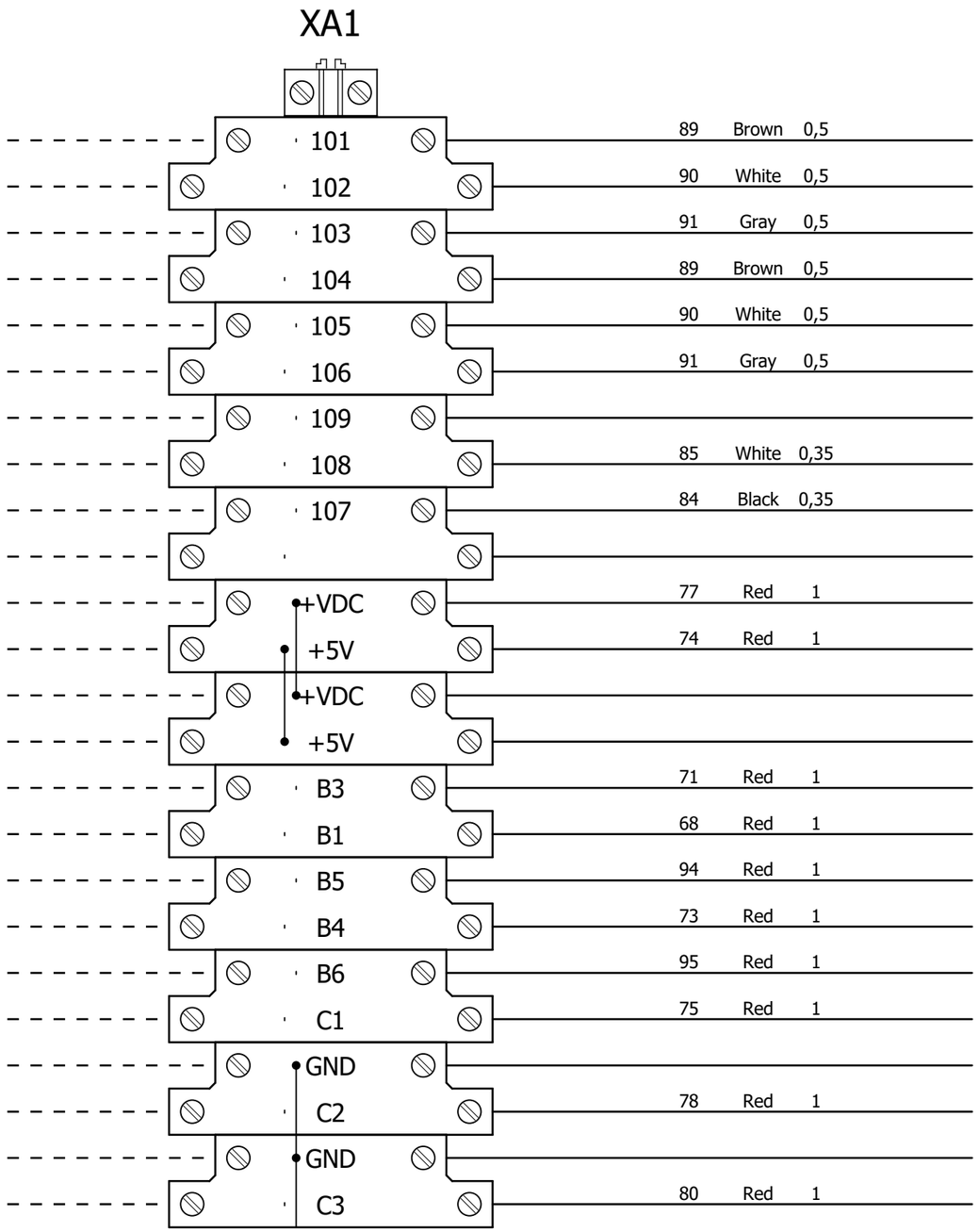

External targets	Teminal type	Terminal position on the drawings
	STTB 2,5	+QE/10.7:H
		+QE/10.6:H
	STTB 2,5	+QE/10.6:H
		+QE/10.8:H
	STTB 2,5	+QE/10.8:H
		+QE/10.8:H
	STTB 2,5	+QE/9.8:H
		+QE/9.8:H
	STTB 2,5	+QE/9.8:H
		+QE/9.9:H
	STTB 2,5	+QE/7.7:H
		+QE/7.7:H
	STTB 2,5	+QE/7.8:H
		+QE/7.7:H
	STTB 2,5	+QE/7.3:H
		+QE/7.2:H
	STTB 2,5	+QE/7.5:H
		+QE/7.4:H
	STTB 2,5	+QE/7.5:H
		+QE/6.4:H
	STTB 2,5	+QE/7.2:H
		+QE/6.8:H
	STTB 2,5	+QE/7.3:H
		+QE/8.1:H

Terminal diagram

Terminal strip

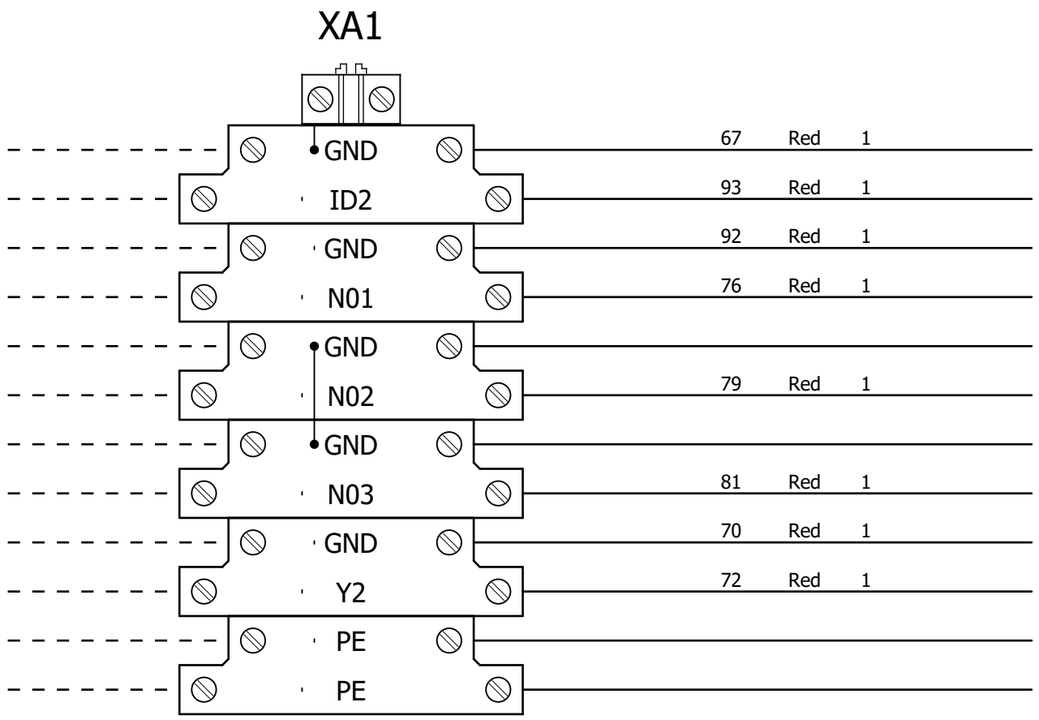

External targets	Teminal type	Terminal position on the drawings
	STTB 2,5	+QE/7.4:H
		+QE/9.1:H
	STTB 2,5	+QE/9.1:H
		+QE/6.5:H
	STTB 2,5	+QE/7.5:H
		+QE/6.8:H
	STTB 2,5	+QE/7.6:H
		+QE/8.1:H
	STTB 2,5	+QE/8.8:H
		+QE/8.8:H
	STTB 2,5-PE	+QE/10.7:H
		+QE/10.5:H

Terminal diagram

Terminal strip

XA2

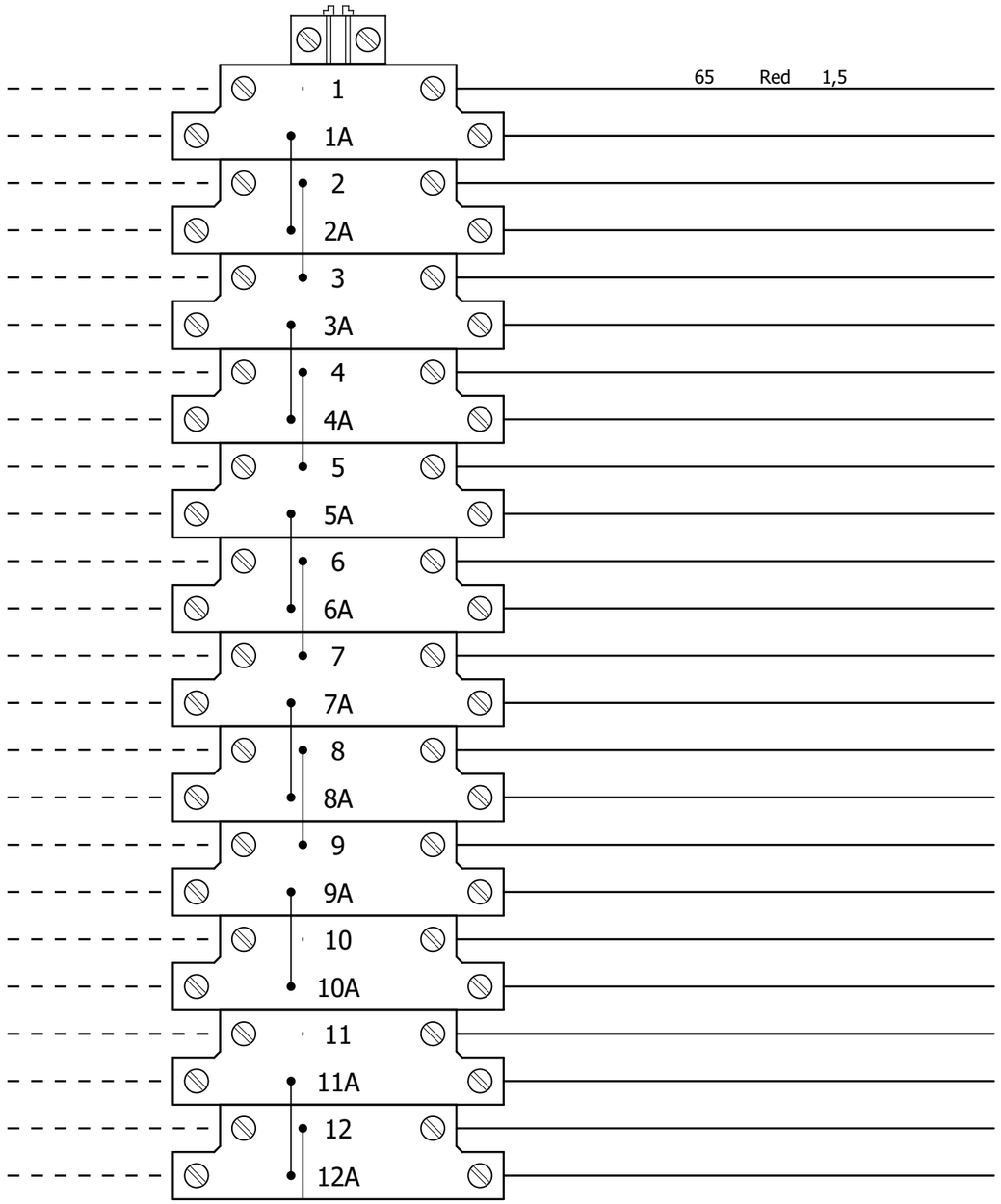

External targets	Teminal type	Terminal position on the drawings
	STTB 2,5	+QE/11.0:H
		+QE/11.1:H
	STTB 2,5	+QE/11.1:H
		+QE/11.1:H
	STTB 2,5	+QE/11.2:H
		+QE/11.2:H
	STTB 2,5	+QE/11.3:H
		+QE/11.3:H
	STTB 2,5	+QE/11.3:H
		+QE/11.4:H
	STTB 2,5	+QE/11.4:H
		+QE/11.4:H
	STTB 2,5	+QE/11.5:H
		+QE/11.5:H
	STTB 2,5	+QE/11.6:H
		+QE/11.6:H
	STTB 2,5	+QE/11.6:H
		+QE/11.7:H
	STTB 2,5	+QE/11.7:H
		+QE/11.8:H
	STTB 2,5	+QE/12.0:H
		+QE/12.1:H
	STTB 2,5	+QE/12.1:H
		+QE/12.1:H

Terminal diagram

Terminal strip

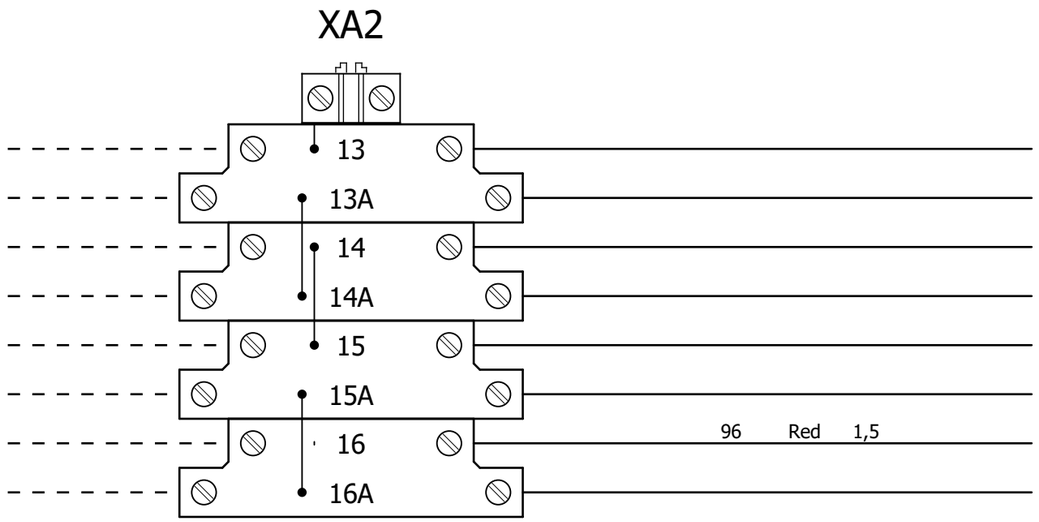

External targets	Teminal type	Terminal position on the drawings
	STTB 2,5	+QE/12.2:H
		+QE/12.2:H
	STTB 2,5	+QE/12.3:H
		+QE/12.3:H
	STTB 2,5	+QE/12.3:H
		+QE/12.4:H
	STTB 2,5	+QE/12.4:H
		+QE/12.4:H

BOM internal panel

InternoQE_F01_003

Short name	Designation	Function text	Position	Manufacturer	Component tipe	Oracle code
AP1	Programmable control		=+QE/6.0:A	CAREL	PCO Compact	PCOXLV0DB0
AP2	Damping magnet, M 5.0	FERRITE 2 SPIRE	=+QE/6.1:D	KE-KITAGAWA	FERRITE CORE	0907877AXX
AP3	Scheda seriale BMS		=+QE/10.6:B	CAREL	Scheda seriale BMS	PCOS004850
E1	Eart terminal	GROUND BAR	=+QE/1.2:D	SCHNEIDER ELECTRIC	14979	2217211AXX
E2	Eart terminal	=	=+QE/1.4:D	SCHNEIDER ELECTRIC	14979	2217211AXX
HL1	Green indicator plate	POWER ON	=+QE/6.1:F	EATON ELECTRIC	M22-L-G	0505187AXX
HL1	Plate	=	=+QE/6.1:F	CEMBRE	15X27	1800243AXX
HL1	Support plate	=	=+QE/6.1:F	CEMBRE	D22 17X30	1800242AXX
HL1	Glass plate	=	=+QE/6.1:F	CEMBRE	15X27	1800244AXX
HL1	Support	=	=+QE/6.1:F	EATON ELECTRIC	M22-A	0505184AXX
HL1	Green lap 24Vac	=	=+QE/6.1:F	EATON ELECTRIC	M22-LED-G	0505101CEL
KR1	Relay	ALARM RELAY	=+QE/11.1:E	FINDER	40.52.8.230.0000	0100751CEL
KR1	Base element	=	=+QE/11.1:E	FINDER	95.05	5931384AXX
M1	Internal fan	EXTRACTOR	=+QE/8.5:F	EZM	150x150	1312697AXX
PE	GROUND		=+QE/1.0:G		PE	PE
PE1	GROUND		=+QE/1.1:H		PE	PE
PE2	GROUND		=+QE/1.2:H		PE	PE
PE3	GROUND		=+QE/1.3:H		PE	PE
PE4	GROUND		=+QE/5.4:H		PE	PE
PE5	GROUND		=+QE/8.5:G		PE	PE
PE6	GROUND		(Quadro elettri co.MP1)		PE	PE
PE7	GROUND		(Quadro elettri co.MP1)		PE	PE
PE8	GROUND		(Quadro elettri co.MP1)		PE	PE

BOM internal panel

InternoQE_F01_003

Short name	Designation	Function text	Position	Manufacturer	Component tipe	Oracle code
PE9	GROUND		=+QE/1.5:H		PE	PE
QF1	Power circuit breaker	PROTECTION 1	=+QE/1.6:C	EATON ELECTRIC	FAZ6-C10/3	0403856CEL
QF2	Power circuit breaker	PROTECTION 2	=+QE/1.8:C	EATON ELECTRIC	FAZ6-C10/3	0403856CEL
QF3	Power circuit breaker	PROTECTION 3	=+QE/2.1:C	EATON ELECTRIC	FAZ6-C10/3	0403856CEL
QF4	Power circuit breaker	PROTECTION 4	=+QE/2.3:C	EATON ELECTRIC	FAZ6-C10/3	0403856CEL
QF5	Power circuit breaker	PROTECTION 5	=+QE/2.4:C	EATON ELECTRIC	FAZ6-C10/3	0403856CEL
QF6	Power circuit breaker	PROTECTION 6	=+QE/2.6:C	EATON ELECTRIC	FAZ6-C10/3	0403856CEL
QF7	Power circuit breaker	PROTECTION 7	=+QE/2.8:C	EATON ELECTRIC	FAZ6-C10/3	0403856CEL
QF8	Power circuit breaker	PROTECTION 8	=+QE/3.1:C	EATON ELECTRIC	FAZ6-C10/3	0403856CEL
QF9	Power circuit breaker	PROTECTION 9	=+QE/3.3:C	EATON ELECTRIC	FAZ6-C10/3	0403856CEL
QF10	Power circuit breaker	PROTECTION 10	=+QE/3.4:C	EATON ELECTRIC	FAZ6-C10/3	0403856CEL
QF11	Power circuit breaker	PROTECTION 9	=+QE/3.6:C	EATON ELECTRIC	FAZ6-C10/3	0403856CEL
QF12	Power circuit breaker	PROTECTION 10	=+QE/3.8:C	EATON ELECTRIC	FAZ6-C10/3	0403856CEL
QF13	Power circuit breaker	PROTECTION 3	=+QE/4.1:C	EATON ELECTRIC	FAZ6-C10/3	0403856CEL
QF14	Power circuit breaker	PROTECTION 9	=+QE/4.2:C	EATON ELECTRIC	FAZ6-C10/3	0403856CEL
QF15	Power circuit breaker	PROTECTION	=+QE/4.4:C	EATON ELECTRIC	FAZ6-C10/3	0403856CEL
QF16	Power circuit breaker	=	=+QE/4.5:C	EATON ELECTRIC	FAZ6-C10/3	0403856CEL
QF17	Power circuit breaker		(Quadro elettri co.MP1)	EATON ELECTRIC	FAZ6-C10/3	0403856CEL
QF18	Power circuit breaker		(Quadro elettri co.MP1)	EATON ELECTRIC	FAZ6-C10/3	0403856CEL
QF21	Power circuit breaker	TRANSFORMER PROTECTION	=+QE/5.2:B	EATON ELECTRIC	FAZ6-C4/2	0403468AXX
QF22	Power circuit breaker	SECONDARY PROTECTION 24V	=+QE/5.2:G	EATON ELECTRIC	FAZ6-C4/1	0403824AXX
QF23	Power circuit breaker	230V SECONDARY PROTECTION	=+QE/5.3:G	EATON ELECTRIC	FAZ6-C2/1	0403819AXX
QS1	Disconnect switch	MAIN SWITCH	=+QE/1.1:E	SOCOMEC	Sirco M125	0402342AXX

BOM internal panel

InternoQE_F01_003

Short name	Designation	Function text	Position	Manufacturer	Component tipe	Oracle code
QS1	Operation	MAIN SWITCH	=+QE/1.1:E	SOCOMEC	Y/R 100-125A	0402345AXX
RR1	Scaldiglia 200W 230V	HEATER E.P.	=+QE/8.4:D	EZM	091187	5729759AXX
ST1	SENSOR NTC WH IP68 -50T105 CABLE 1,5M	CABINET TEMPERATURE	=+QE/7.3:E	CAREL	NTC015WH01	NTC015WH01
TC1	TRANSFORMER	TRANSFORMER	=+QE/5.2:D		400V-230V 310VA//24V 60AV - 230V 250VA	0910244AXX

BOM external panel

EsternoQE_F01_003

Place	Short name	Function text	Position	Technical characteristics
+EXT	M1.1	Fan	=+QE/1.6:I	
+EXT	M1.2	=	=+QE/3.3:I	
+EXT	M2.1	=	=+QE/1.8:I	
+EXT	M2.2	=	=+QE/3.4:I	
+EXT	M3.1	=	=+QE/2.1:I	
+EXT	M3.2	=	=+QE/3.6:I	
+EXT	M4.1	=	=+QE/2.3:I	
+EXT	M4.2	=	=+QE/3.8:I	
+EXT	M5.1	=	=+QE/2.4:I	
+EXT	M5.2	=	=+QE/4.1:I	
+EXT	M6.1	=	=+QE/2.6:I	
+EXT	M6.2	=	=+QE/4.2:I	
+EXT	M7.1	=	=+QE/2.8:I	
+EXT	M7.2	=	=+QE/4.4:I	
+EXT	M8.1	=	=+QE/3.1:I	
+EXT	M8.2	=	=+QE/4.5:I	
+EXT	ST1	SIGNAL FOR FANS	=+QE/7.2:I	
+EXT	ST2	EXTERNAL AIR TEMP	=+QE/7.3:I	
+EXT	ST3	SIGNAL FOR FANS REGULATOR	=+QE/7.4:I	

alfa.luvegroup.com

Product code	CM00009390	Rev	6
Project description	EP 18 FANS ALFA-LUVE		

Supply voltage	3P+N+E - 400V - 50Hz	Operating temperature	40°C
Rated current	90A Icc 6KA		
Auxiliary voltage	24Vac/230Vac		

Designed by	Franco Meneghetti	on	30/01/2015
Checked by	Mattia Bortolotto	on	10/03/2015
Approved by	Luca Tessaro	on	10/12/2015

NOT ALLOWED DELIVER TO THIRD PARTIES OR REPRODUCE THIS DOCUMENT NOT USE THE CONTENT OR OTHERWISE MAKE KNOWN TO THIRD PARTIES WITHOUT OUR EXPRESS PERMISSION. ANY INFRINGEMENT WILL RESULT IN DAMAGES SUFFERED. And it MADE SUBJECT TO ALL RIGHTS UNDER PATENTS OR MODELS

Cables Range

Cross-sect	N07V-K Range (A)	N07G9 Range (A)
0,5	\	NOT AVAILABLE
0,75	\	NOT AVAILABLE
1	8A	12A
1,5	11A	16A
2,5	15A	22.4A
4	20A	29.6A
6	26A	38.4A
10	36A	52.8A
16	48A	70.4A
25	64A	93.6A
35	80A	115.2A
50	95A	140A
95	150A	177.6A
120	170A	215.2A
150	195A	NOT AVAILABLE
185	220A	NOT AVAILABLE
240	260A	NOT AVAILABLE
300	300A	NOT AVAILABLE

Colors Table

Colors	Short name
Red	RD
Black	BK
Yellow	YE
Yellow\Green	GNYE
Orange	OG
Light blue	TQ
Blue	BU
Pink	PK
White	WH
Gray	GY
Brown	BN
Green	GN
Purple	VT
\	
\	
\	
\	

REVIEW TABLE

Rev.	Technical name	Date	Note
01	FRANCO MENEGHETTI	17/03/2015	- -
02	FRANCO MENEGHETTI	01/07/2015	- -
03	FRANCO MENEGHETTI	10/12/2015	- -
04	FRANCO MENEGHETTI	09/02/2016	- -
05	FRANCO MENEGHETTI	09/06/2017	- -
06	LUCA QUAGGIA	10/09/2019	- -

Table of contents

F06_003

Page	Page type	Page description	Date	Edited by
/1	Title page / cover sheet	Title page	31/01/2020	Luca Quaggia
/2	Pre-planning	Technical information	31/01/2020	Luca Quaggia
/3	Table of contents	Table of contents	31/01/2020	Luca Quaggia
/3.a	Table of contents	Table of contents	31/01/2020	Luca Quaggia
/4	Model view	General view	31/01/2020	Luca Quaggia
/5	Model view	View of all sides	31/01/2020	Luca Quaggia
/6	Model view	Mounting plate view	31/01/2020	Luca Quaggia
/7	Model view	Door view	31/01/2020	Luca Quaggia
/8	Model view	Guides view	31/01/2020	Luca Quaggia
/9	Model view	Channels view	31/01/2020	Luca Quaggia
/10	Model view	Bottom view	31/01/2020	Luca Quaggia
+QE/1	Schematic multi-line	Power circuit	31/01/2020	Luca Quaggia
+QE/2	Schematic multi-line	Power circuit	31/01/2020	Luca Quaggia
+QE/3	Schematic multi-line	Power circuit	31/01/2020	Luca Quaggia
+QE/4	Schematic multi-line	Power circuit	31/01/2020	Luca Quaggia
+QE/5	Schematic multi-line	Power circuit	31/01/2020	Luca Quaggia
+QE/6	Schematic multi-line	Auxiliary circuit	31/01/2020	Luca Quaggia
+QE/7	Schematic multi-line	Auxiliary circuit	31/01/2020	Luca Quaggia
+QE/7.a	Schematic multi-line	Auxiliary circuit	31/01/2020	Luca Quaggia
+QE/8	Schematic multi-line	Auxiliary circuit	31/01/2020	Luca Quaggia
+QE/9	Schematic multi-line	Auxiliary circuit	31/01/2020	Luca Quaggia
+QE/10	Schematic multi-line	Auxiliary circuit	31/01/2020	Luca Quaggia
+QE/11	Schematic multi-line	Auxiliary circuit	31/01/2020	Luca Quaggia
+QE/12	Schematic multi-line	Auxiliary circuit	31/01/2020	Luca Quaggia
+QE/13	Schematic multi-line	Auxiliary circuit	31/01/2020	Luca Quaggia
+QE/14	Schematic multi-line	Auxiliary circuit	31/01/2020	Luca Quaggia
+QE/15	Schematic multi-line	Auxiliary circuit	31/01/2020	Luca Quaggia
+QE/16	Schematic multi-line	Auxiliary circuit	31/01/2020	Luca Quaggia
+QE/17	Graphic	Serial connection	31/01/2020	Luca Quaggia
+QE/18	Graphic	Certificazione	31/01/2020	Luca Quaggia
=REP1/1,0	Cable diagram	Multicore cables scheme	31/01/2020	Luca Quaggia
=REP1/1,1	Cable diagram	Multicore cables scheme	31/01/2020	Luca Quaggia
=REP1/1,2	Cable diagram	Multicore cables scheme	31/01/2020	Luca Quaggia
=REP1/1,3	Cable diagram	Multicore cables scheme	31/01/2020	Luca Quaggia
=REP1/2,0	Terminal diagram	Terminal strip	31/01/2020	Luca Quaggia
=REP1/2,0.a	Terminal diagram	Terminal strip	31/01/2020	Luca Quaggia
=REP1/2,1	Terminal diagram	Terminal strip	31/01/2020	Luca Quaggia
=REP1/2,1.a	Terminal diagram	Terminal strip	31/01/2020	Luca Quaggia
=REP1/3,0	Parts list	BOM internal panel	31/01/2020	Luca Quaggia

Table of contents

F06_003

Page	Page type	Page description	Date	Edited by
=REP1/3,0.a	Parts list	BOM internal panel	31/01/2020	Luca Quaggia
=REP1/3,0.b	Parts list	BOM internal panel	31/01/2020	Luca Quaggia
=REP1/4,0	Parts list	BOM external panel	31/01/2020	Luca Quaggia

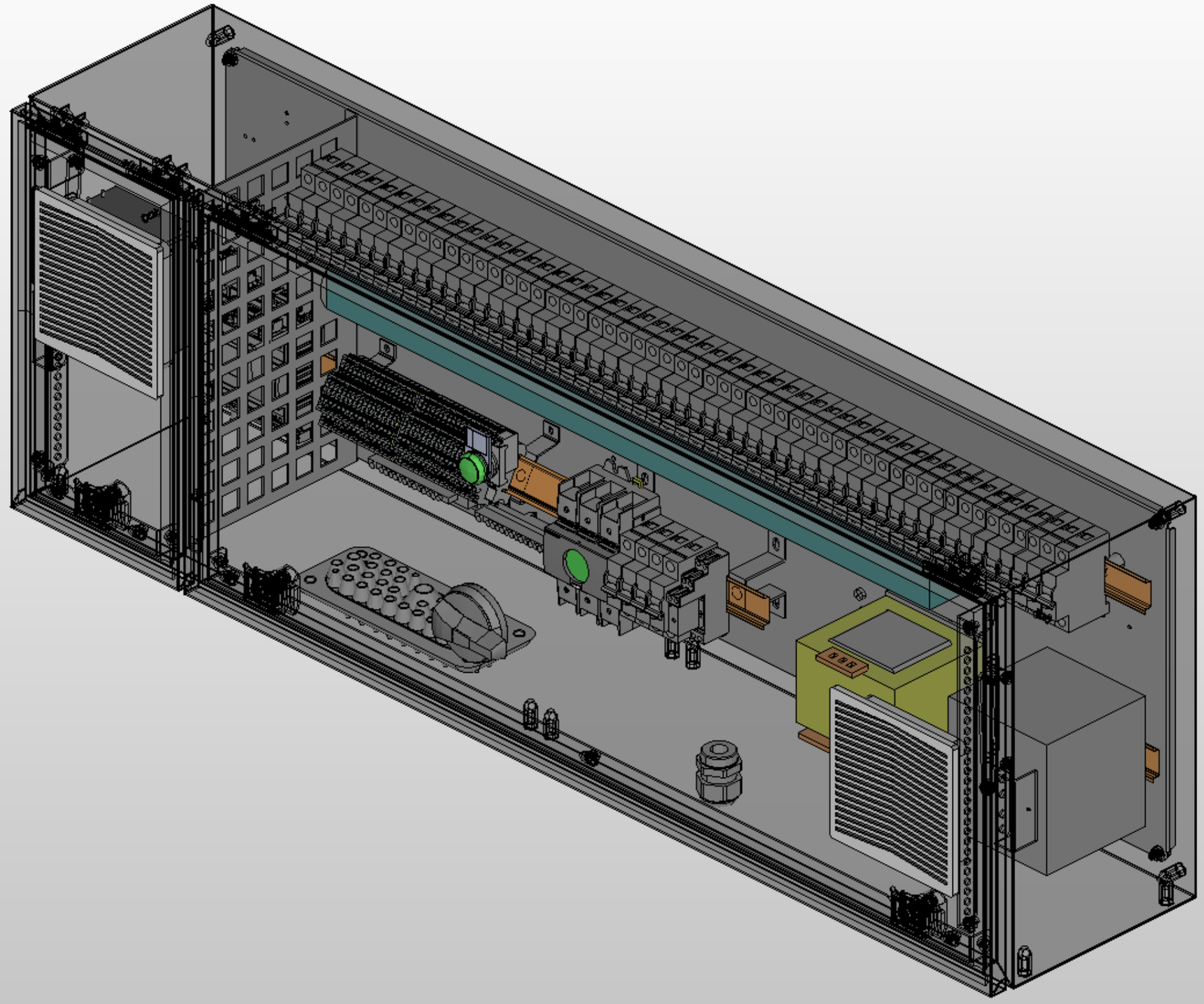

			Date	30/01/2015	CM00009390	ALFA LU-VE	General view	Mounting locations +	Page /4
			Elab.	Franco Meneghetti	EP 18 FANS ALFA-LUVE				Next 5
								Function =	Total pages 42
Modification	Date	Name							

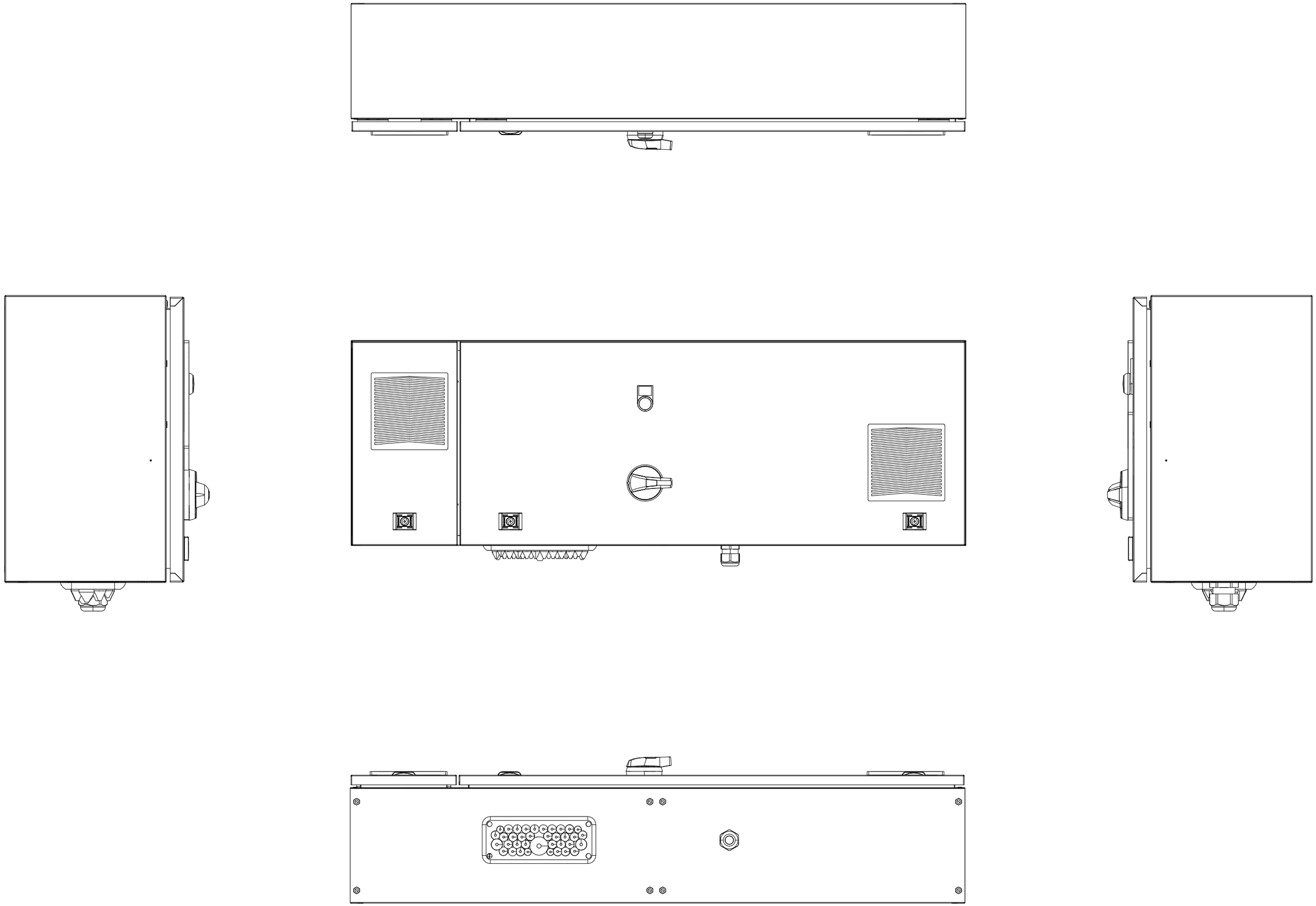

			Date	30/01/2015	CM00009390	ALFA LU-VE	View of all sides	Mounting locations +	Page /5
			Elab.	Franco Meneghetti	EP 18 FANS ALFA-LUVE				Next 6
								Function =	Total pages 42
Modification	Date	Name							

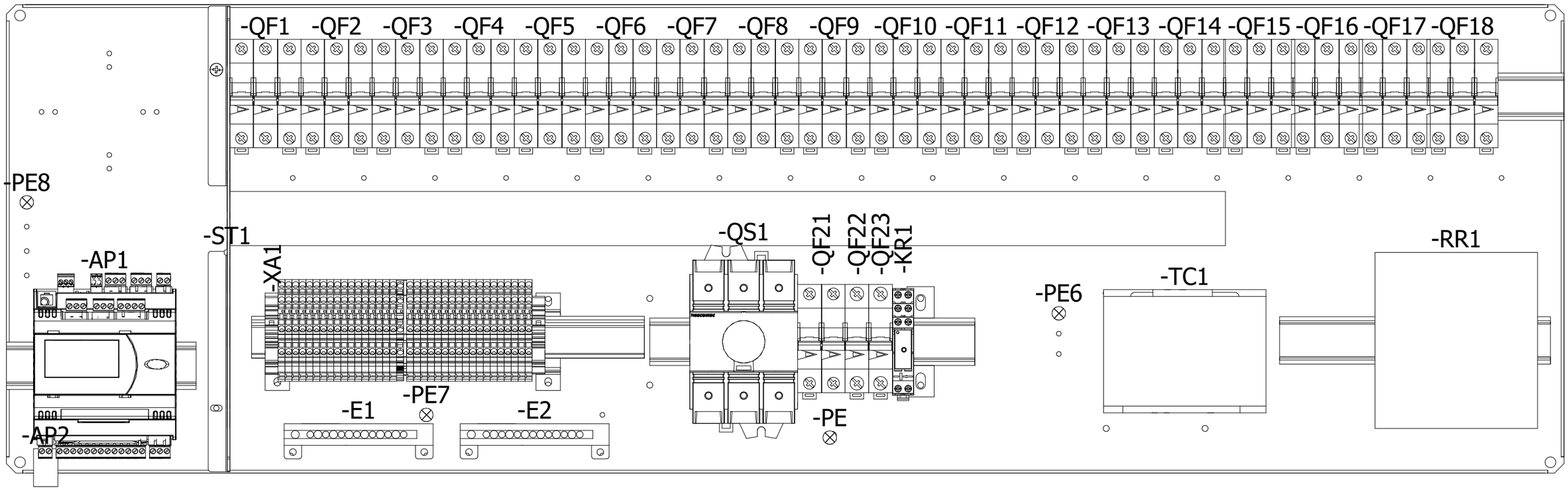

			Date	30/01/2015	CM00009390	ALFA LU-VE	Mounting plate view	Mounting locations +	Page /6
			Elab.	Franco Meneghetti	EP 18 FANS ALFA-LUVE				Next 7
								Function =	Total pages 42
Modification	Date	Name							

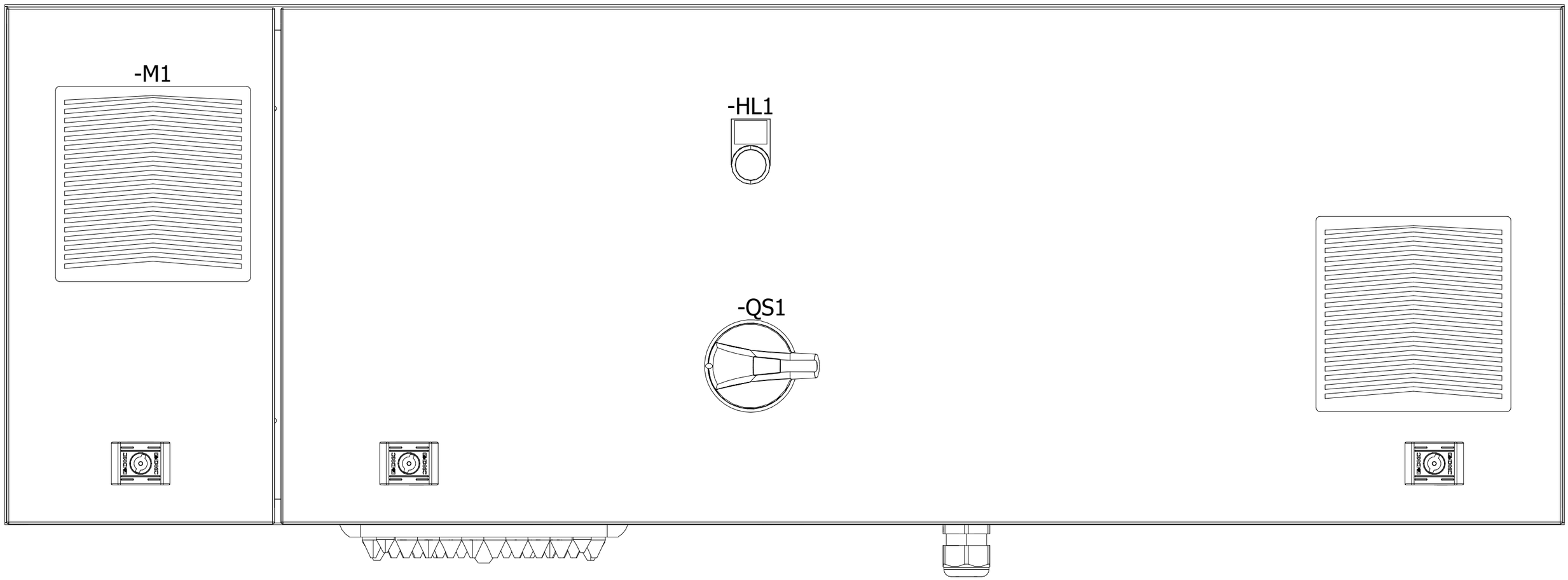

			Date	30/01/2015	CM00009390	ALFA LU-VE	Door view	Mounting locations +	Page /7
			Elab.	Franco Meneghetti	EP 18 FANS ALFA-LUVE				Next 8
								Function =	Total pages 42
Modification	Date	Name							

Layout guides and channels

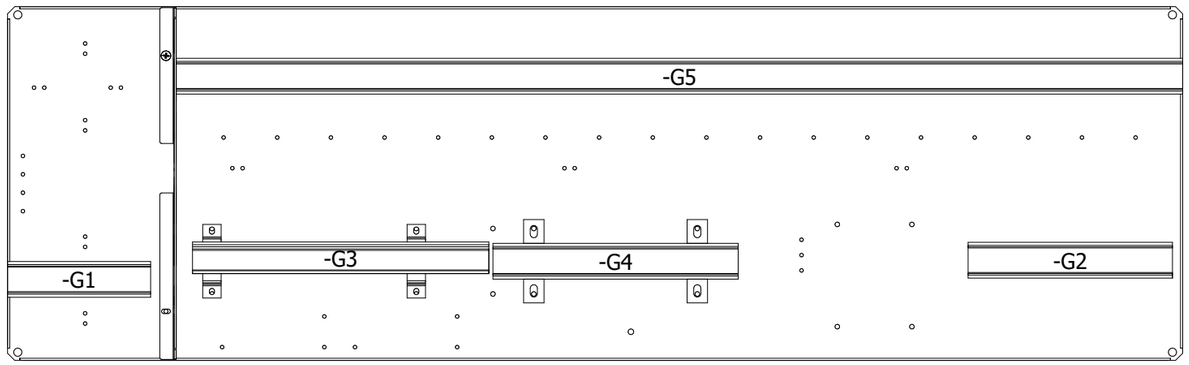

Sign	Type	Length (Tollerance -5mm)
U1	Inclined Bracket	
U2	Inclined Bracket	

G2	35x7.5	200 mm
G1	35x7.5	140 mm
G3	35x7.5	290 mm
G5	35x7.5	970 mm
G4	35x7.5	240 mm

U3	Staffa H=50mm	
U4	Staffa H=50mm	

U5	2cm Rise	
U6	2cm Rise	
U7	2cm Rise	

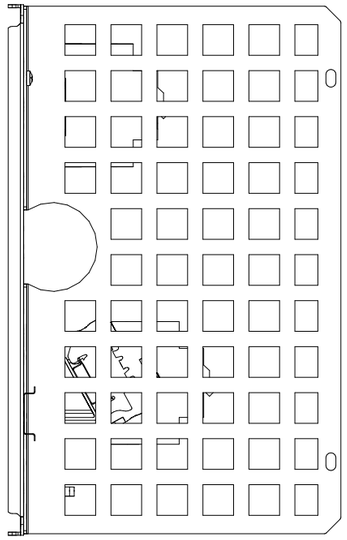

Empty

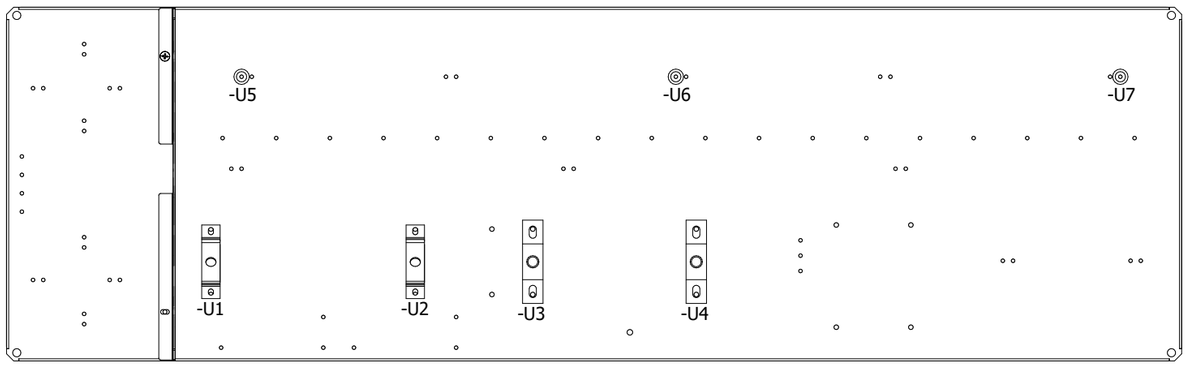

Empty

			Date	30/01/2015
			Elab.	Franco Meneghetti
Modification	Date	Name		

CM00009390

EP 18 FANS ALFA-LUVE

ALFA LU-VE

Guides view

Mounting locations +

Function =

Page /8

Next 9

Total pages 42

Layout guides and channels

Sign	Type	Length (Tollerance -5mm)
C1	40X40	720 mm

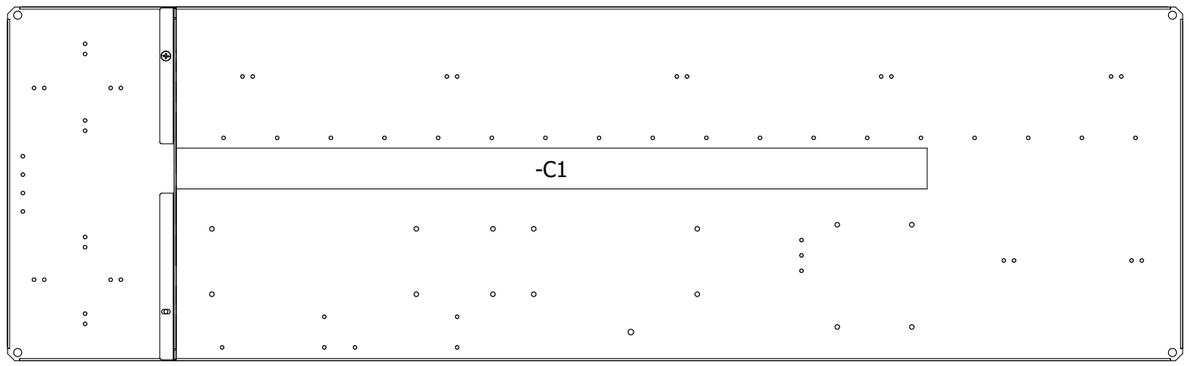

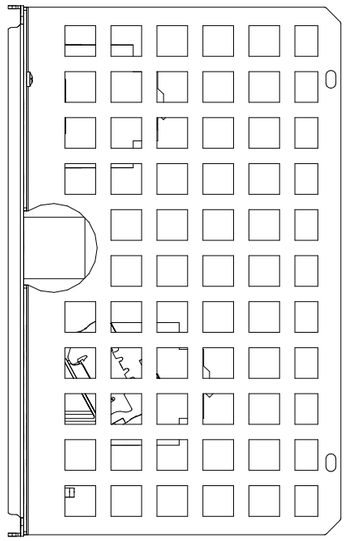

			Date	30/01/2015
			Elab.	Franco Meneghetti
Modification	Date	Name		

CM00009390

EP 18 FANS ALFA-LUVE

ALFA LU-VE

Channels view

Mounting locations +

Function =

Page /9

Next 10

Total pages 42

Cable entry/exit components

Item number	Component tipe	Drilling (Tollerance +-0.5mm)
1	M32 Gland	Ø 32.5mm
2	Multi-cable gland	

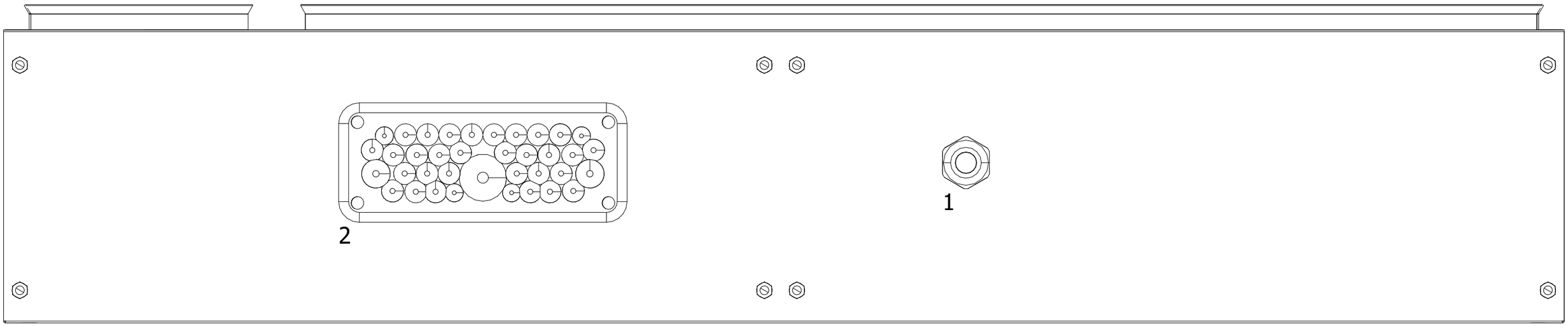

			Date	30/01/2015	CM00009390	ALFA LU-VE	Bottom view	Mounting locations +	Page /10
			Elab.	Franco Meneghetti	EP 18 FANS ALFA-LUVE				Next +QE/1
								Function =	Total pages 42
Modification	Date	Name							

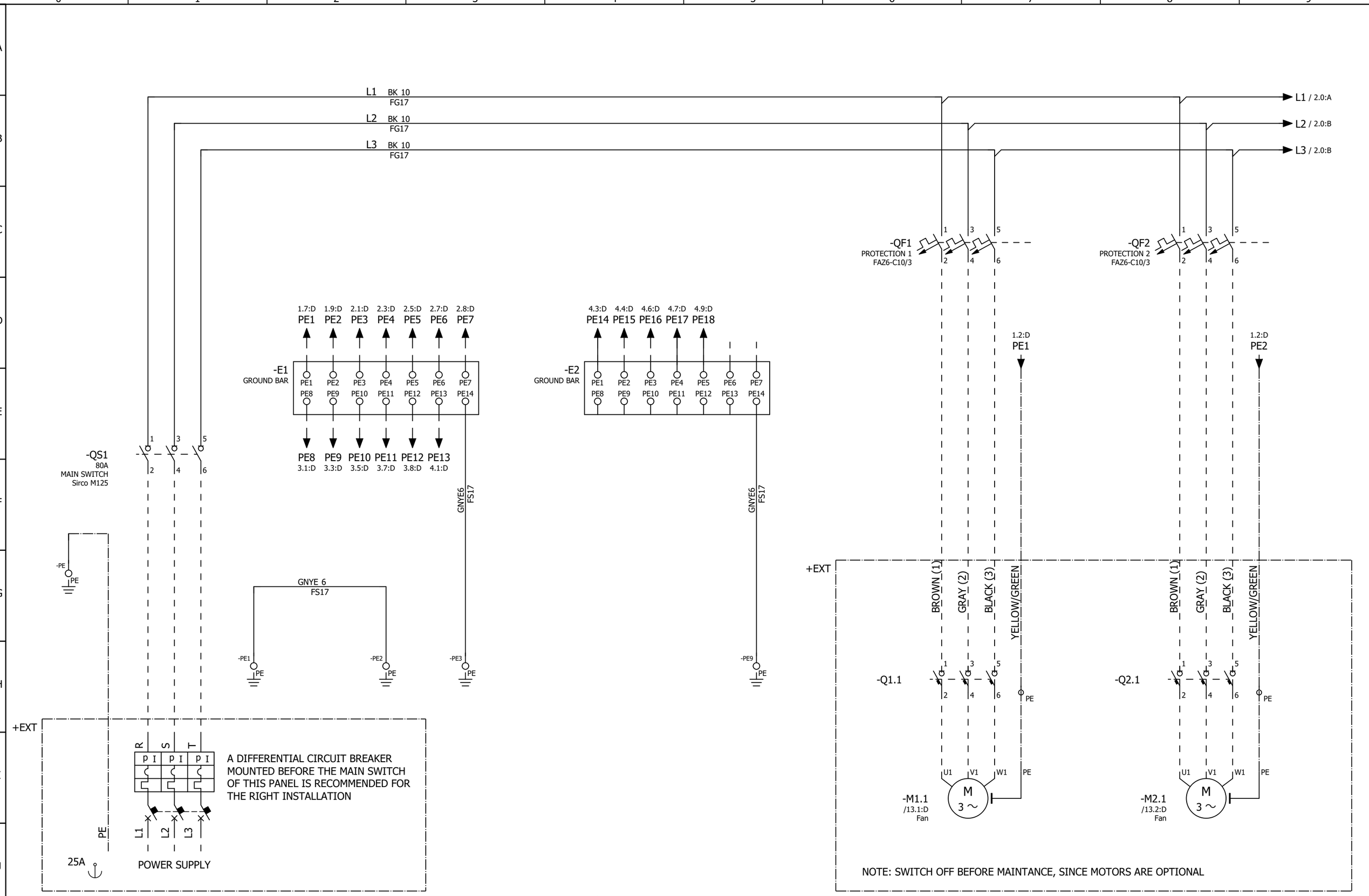

			Date	30/01/2015	CM00009390	ALFA LU-VE	Power circuit	Mounting locations + QE	Page +QE/1
			Elab.	Franco Meneghetti	EP 18 FANS ALFA-LUVE			Function =	Next 2
Modification	Date	Name							Total pages 42

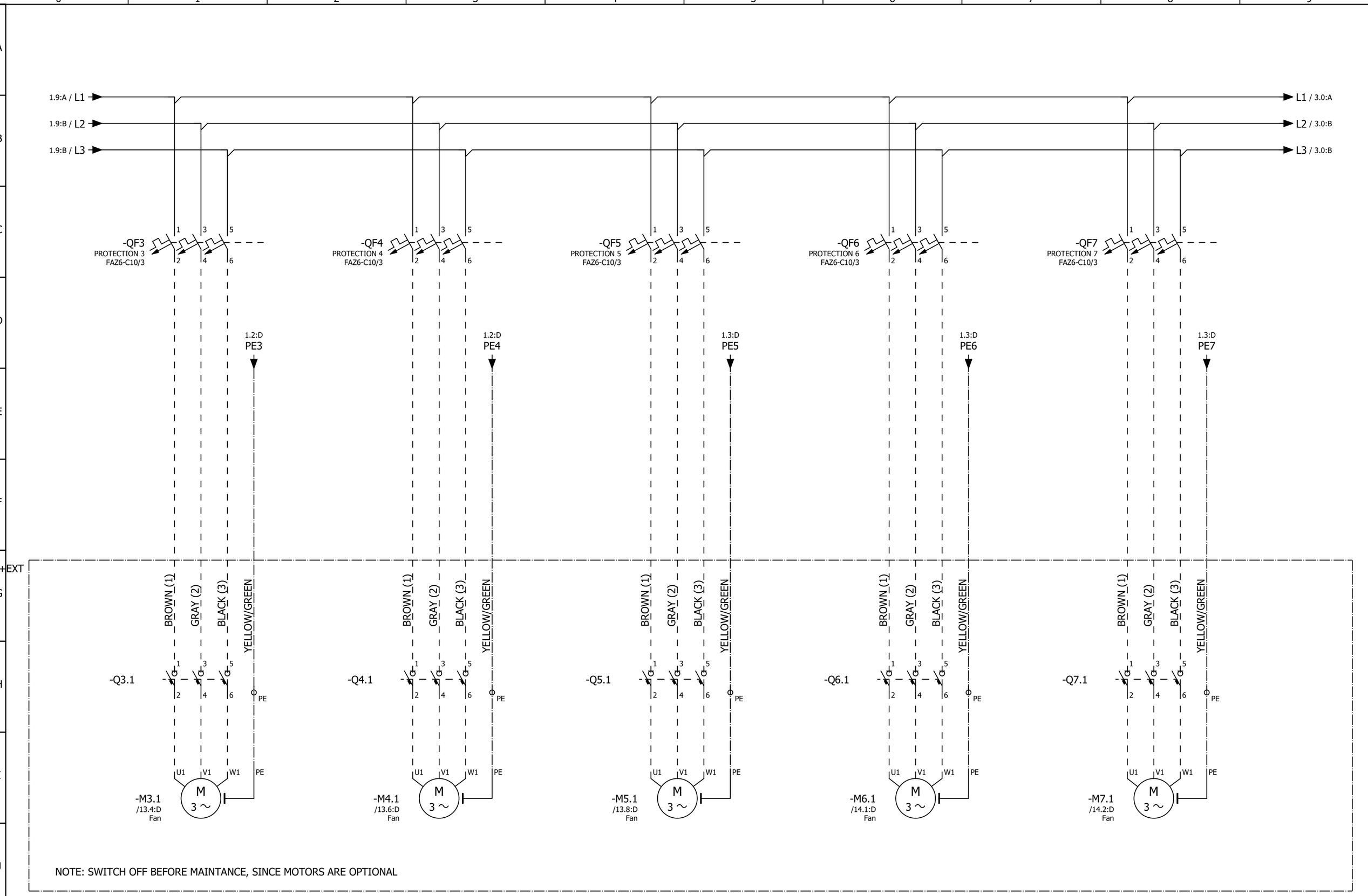

			Date	30/01/2015	CM00009390	ALFA LU-VE	Power circuit	Mounting locations + QE	Page +QE/2
			Elab.	Franco Meneghetti	EP 18 FANS ALFA-LUVE				Next 3
Modification	Date	Name						Function =	Total pages 42

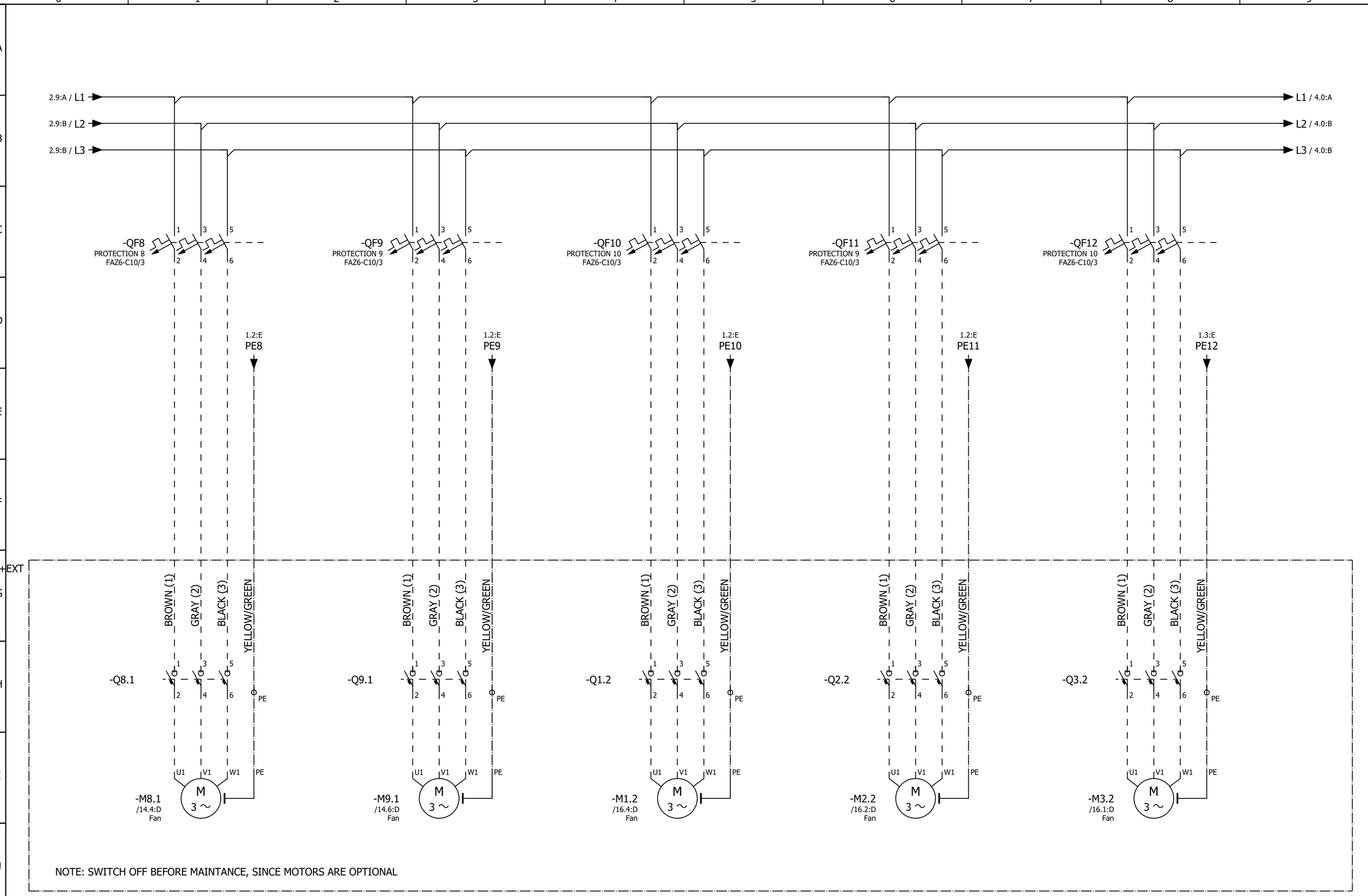

			Date	30/01/2015	CM00009390	ALFA LU-VE	Power circuit	Mounting locations + QE	Page +QE/3
			Elab.	Franco Meneghetti	EP 18 FANS ALFA-LUVE				Next 4
Modification	Date	Name						Function =	Total pages 42

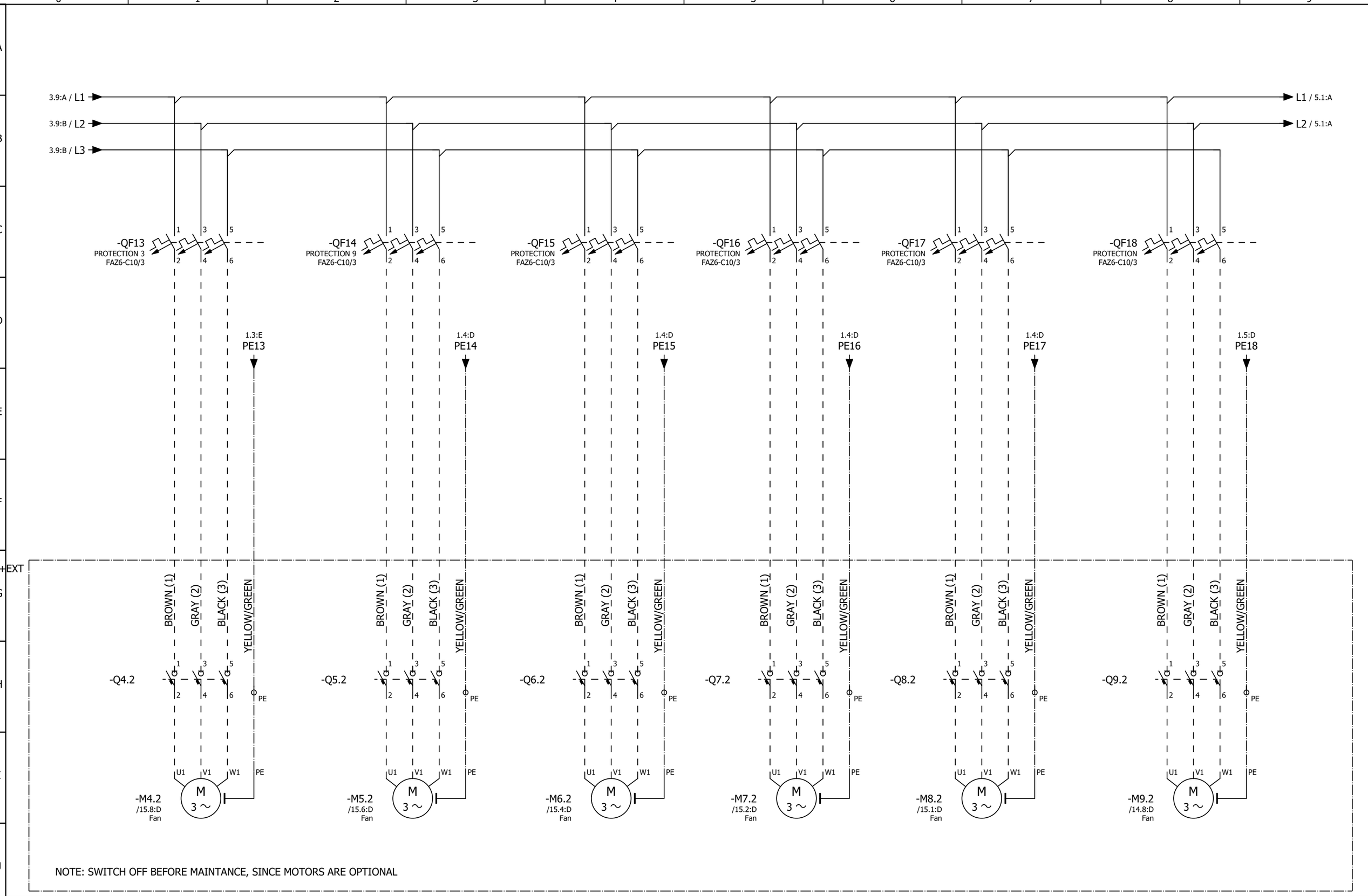

			Date	30/01/2015	CM00009390	ALFA LU-VE	Power circuit	Mounting locations + QE	Page +QE/4
			Elab.	Franco Meneghetti	EP 18 FANS ALFA-LUVE				Next 5
Modification	Date	Name						Function =	Total pages 42

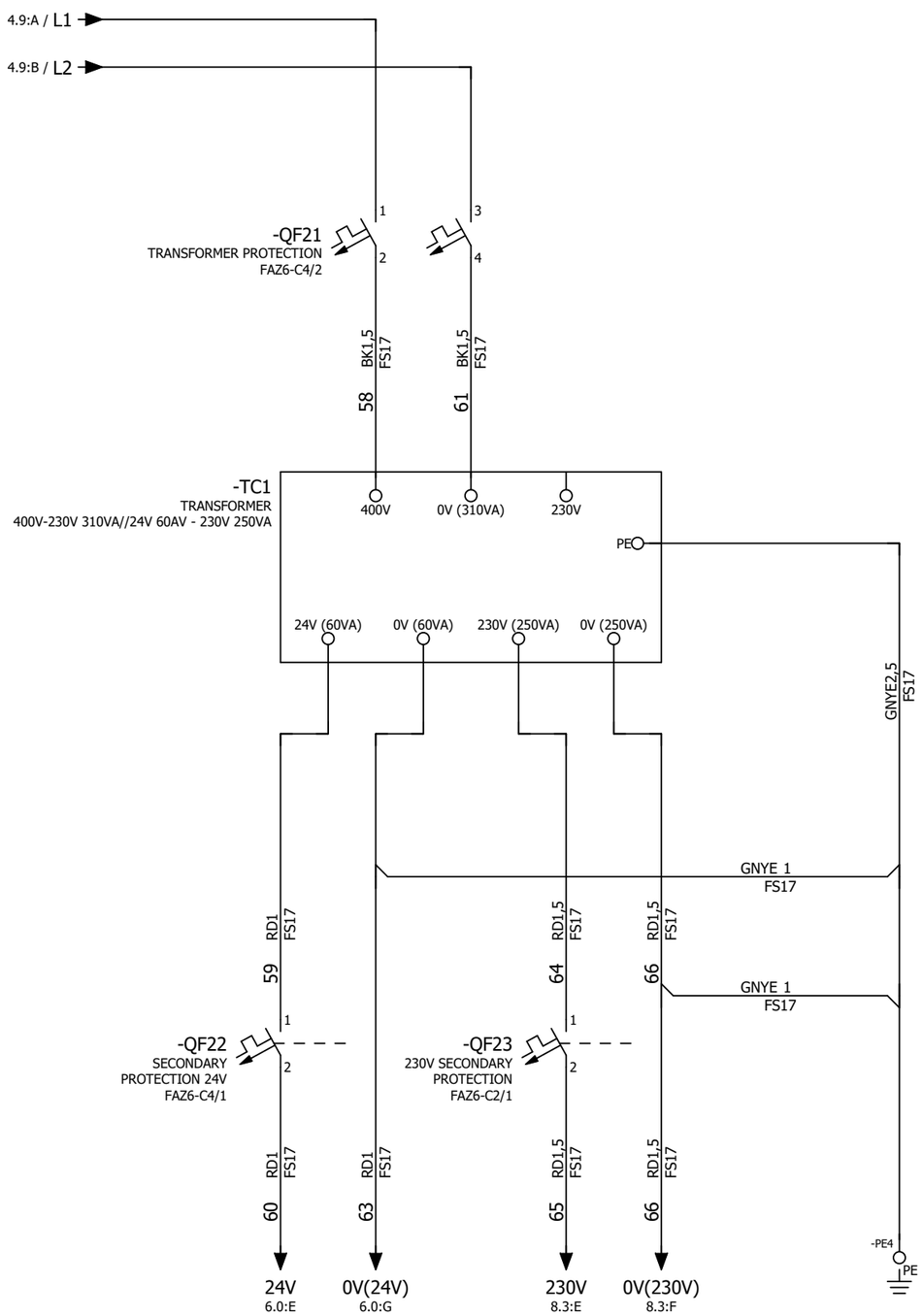

			Date	30/01/2015	CM00009390	ALFA LU-VE	Power circuit	Mounting locations + QE	Page +QE/5
			Elab.	Franco Meneghetti	EP 18 FANS ALFA-LUVE			Function =	Next 6
Modification	Date	Name							Total pages 42

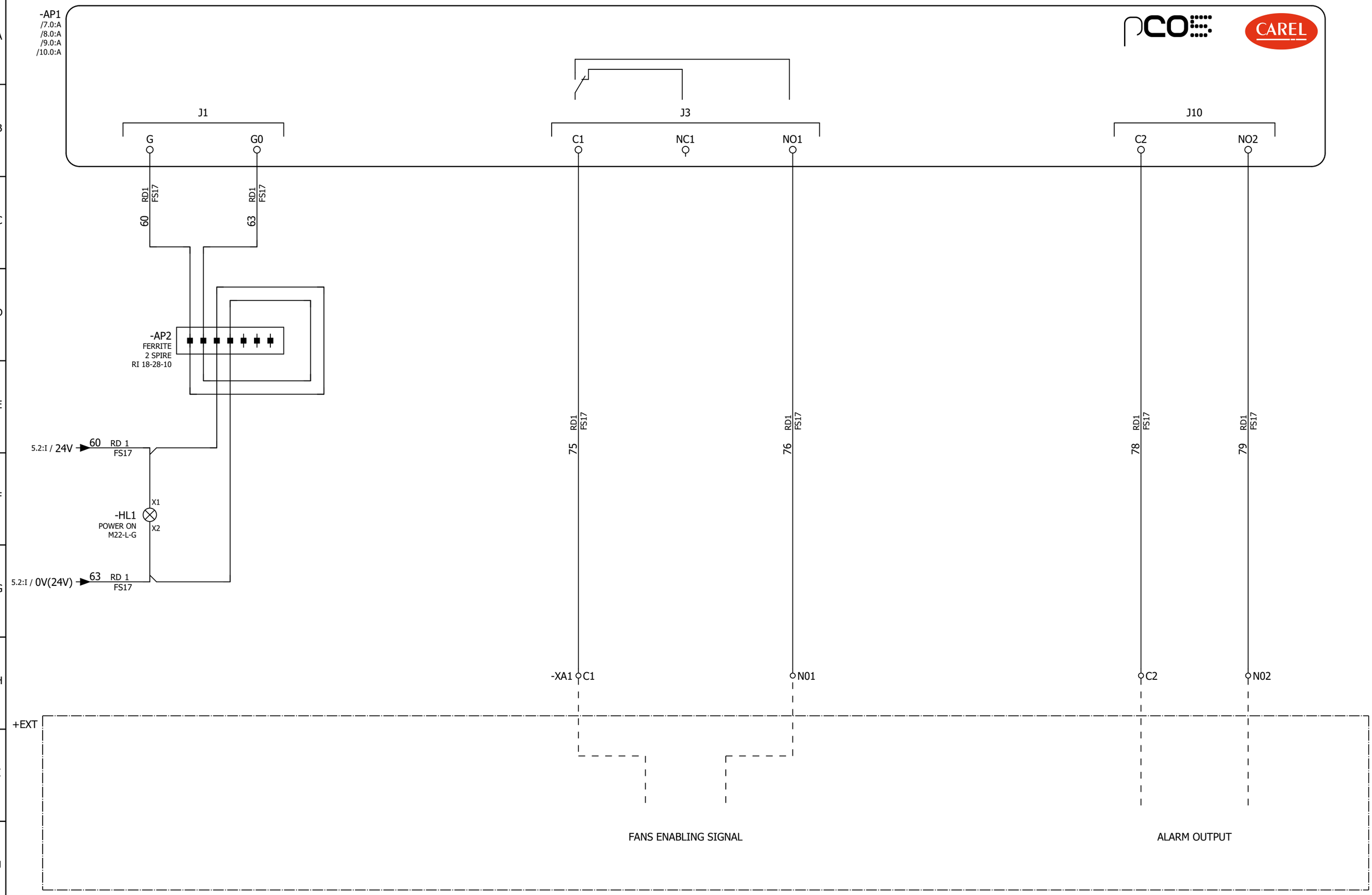

			Date	30/01/2015
			Elab.	Franco Meneghetti
Modification	Date	Name		

CM00009390

EP 18 FANS ALFA-LUVE

Auxiliary circuit

Mounting locations + QE

Function =

Page +QE/6

Next 7

Total pages 42

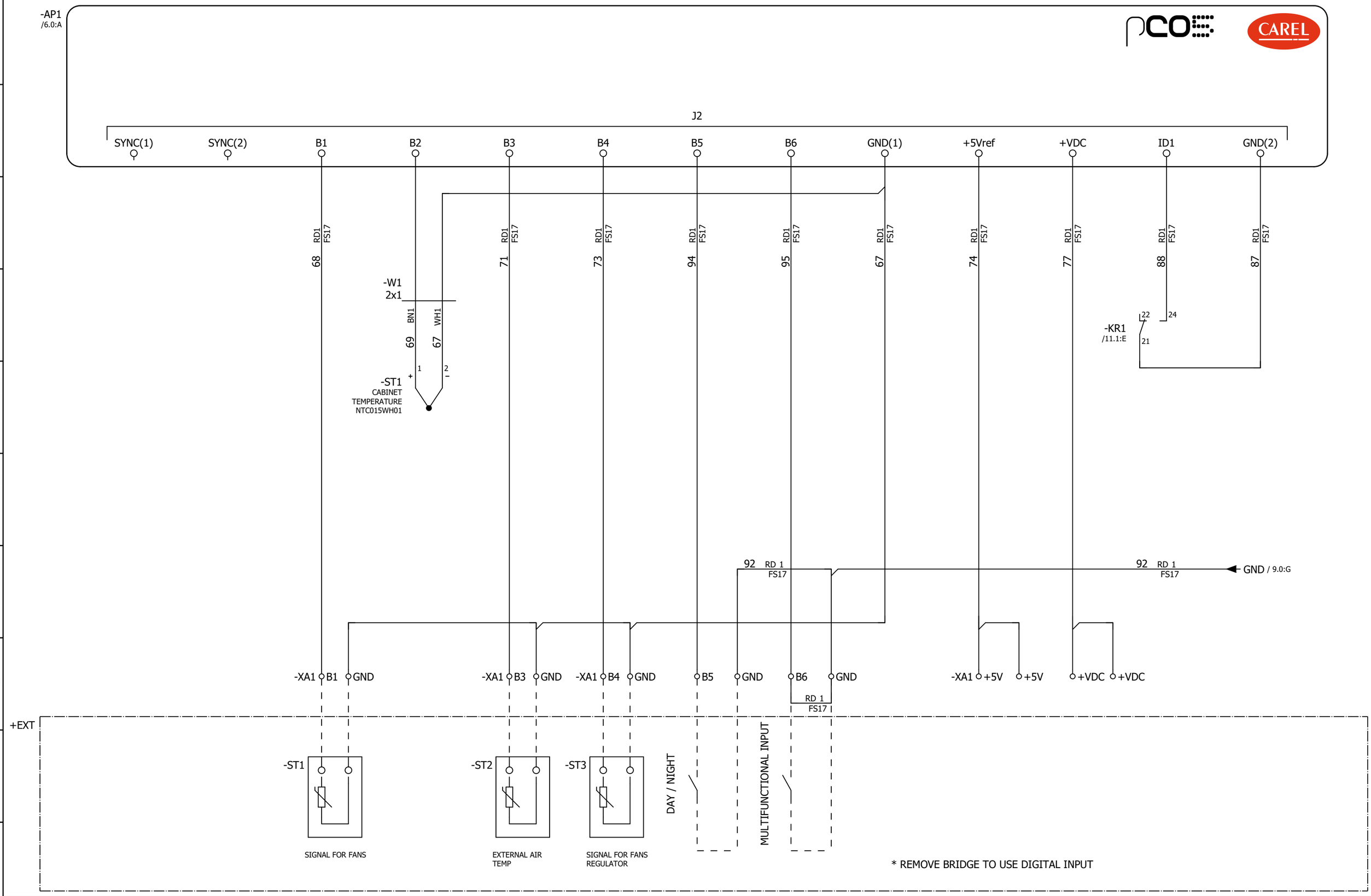

			Date	30/01/2015
			Elab.	Franco Meneghetti
Modification	Date	Name		

CM00009390

EP 18 FANS ALFA-LUVE

Auxiliary circuit

Mounting locations + QE

Function =

Page +QE/7

Next 7.a

Total pages 42

NO PT1000
B1 SIGNAL FOR FANS (NTC)
B2 E.P. TEMPERATURE (NTC)
B3 EXTERNAL AIR TEMPERATURE (NTC)
B4 ----------

WITH PT1000
B1 ----------
B2 E.P. TEMPERATURE (NTC)
B3 EXTERNAL AIR TEMPERATURE (NTC)
B4 SIGNAL FOR FANS (PT1000)

PROBE CONNECTIONS

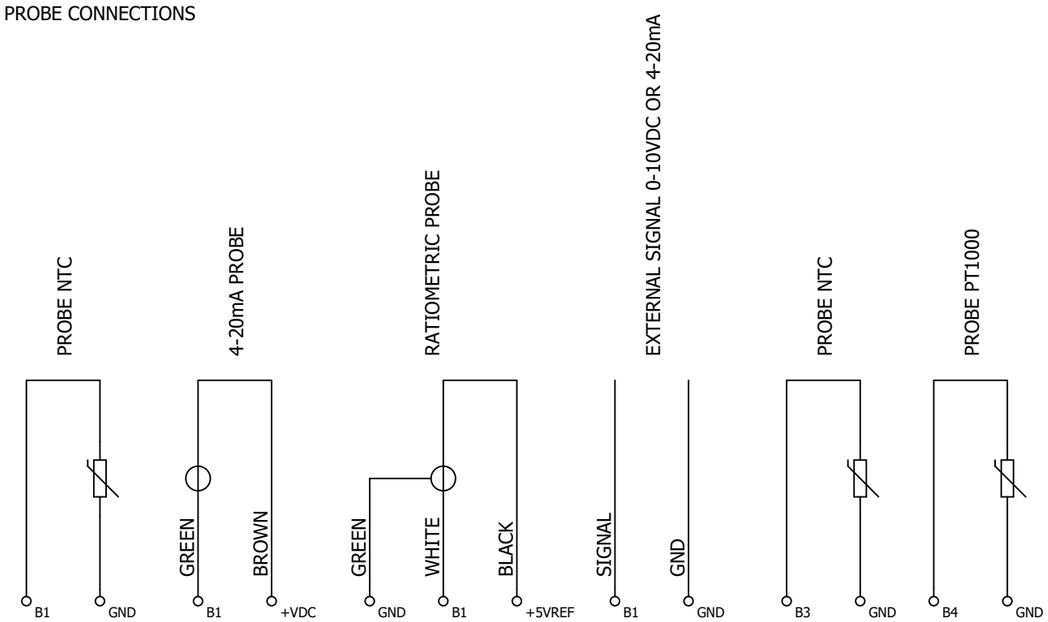

			Date	30/01/2015
			Elab.	Franco Meneghetti
Modification	Date	Name		

CM00009390

EP 18 FANS ALFA-LUVE

ALFA LU-VE

Auxiliary circuit

Mounting locations + QE

Function =

Page +QE/7.a

Next 8

Total pages 42

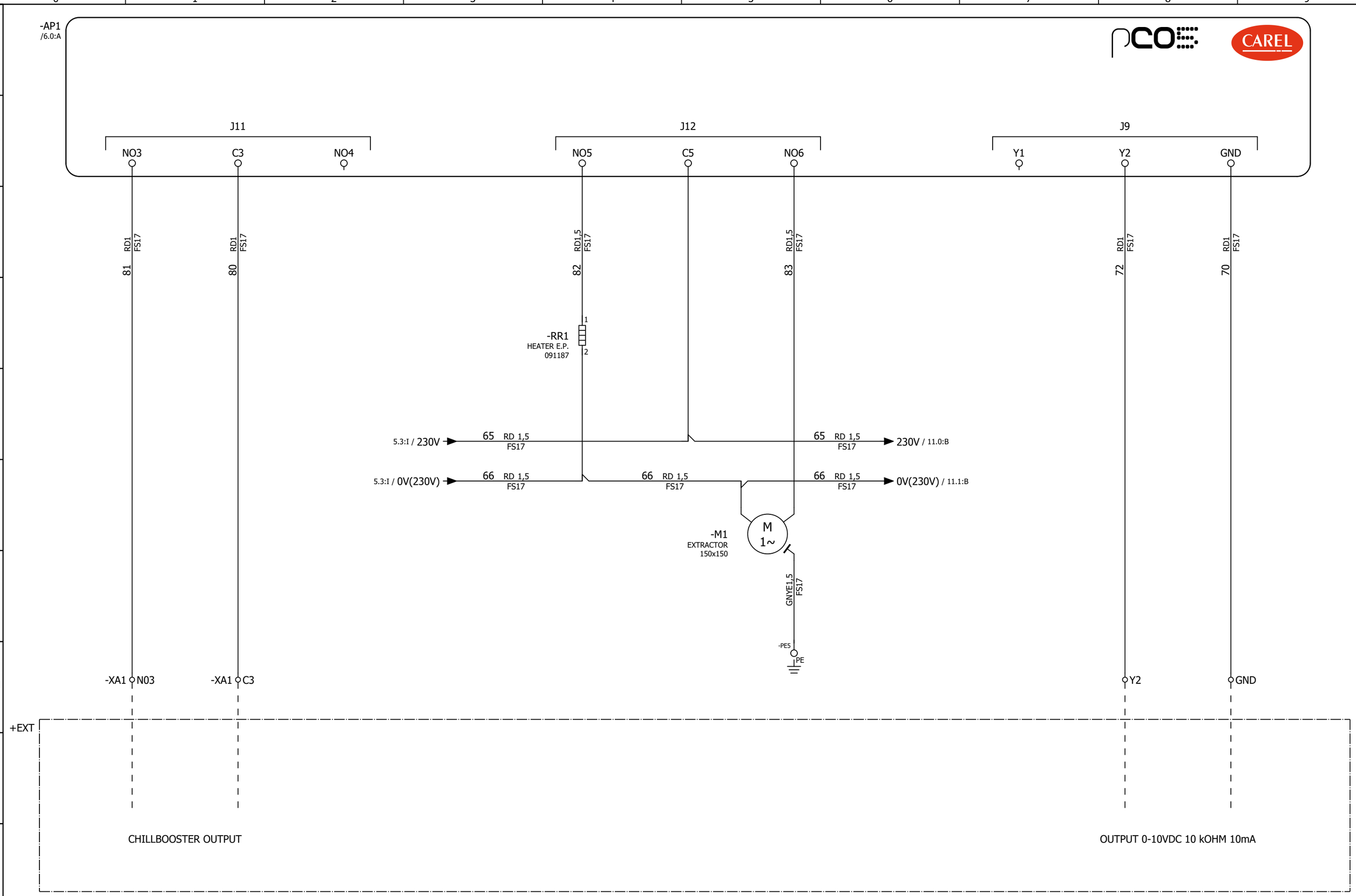

			Date	30/01/2015
			Elab.	Franco Meneghetti
Modification	Date	Name		

CM00009390

EP 18 FANS ALFA-LUVE

Auxiliary circuit

Mounting locations + QE

Function =

Page +QE/8

Next 9

Total pages 42

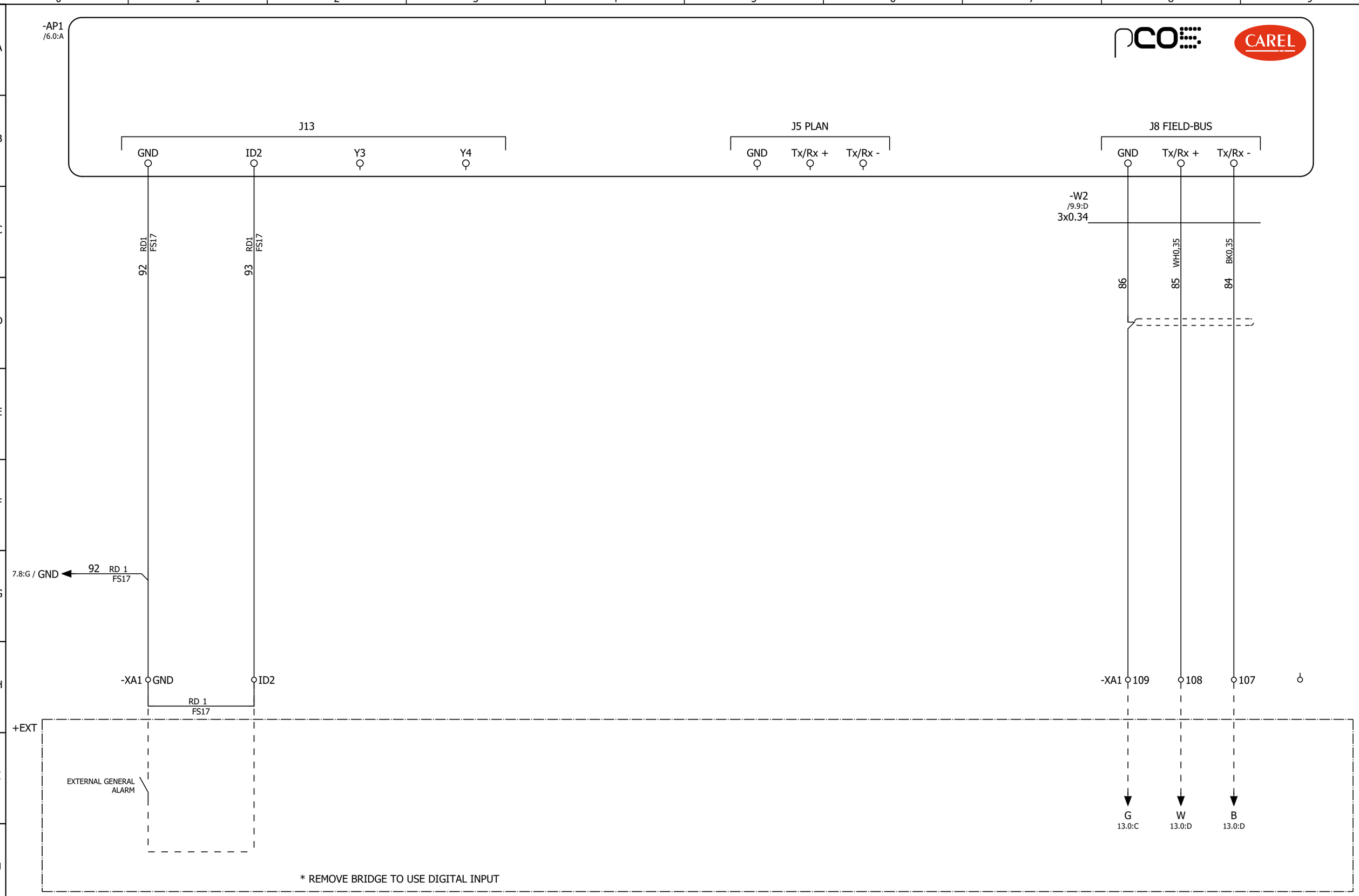

			Date	30/01/2015
			Elab.	Franco Meneghetti
Modification	Date	Name		

CM00009390

EP 18 FANS ALFA-LUVE

Auxiliary circuit

Mounting locations + QE

Function =

Page +QE/9

Next 10

Total pages 42

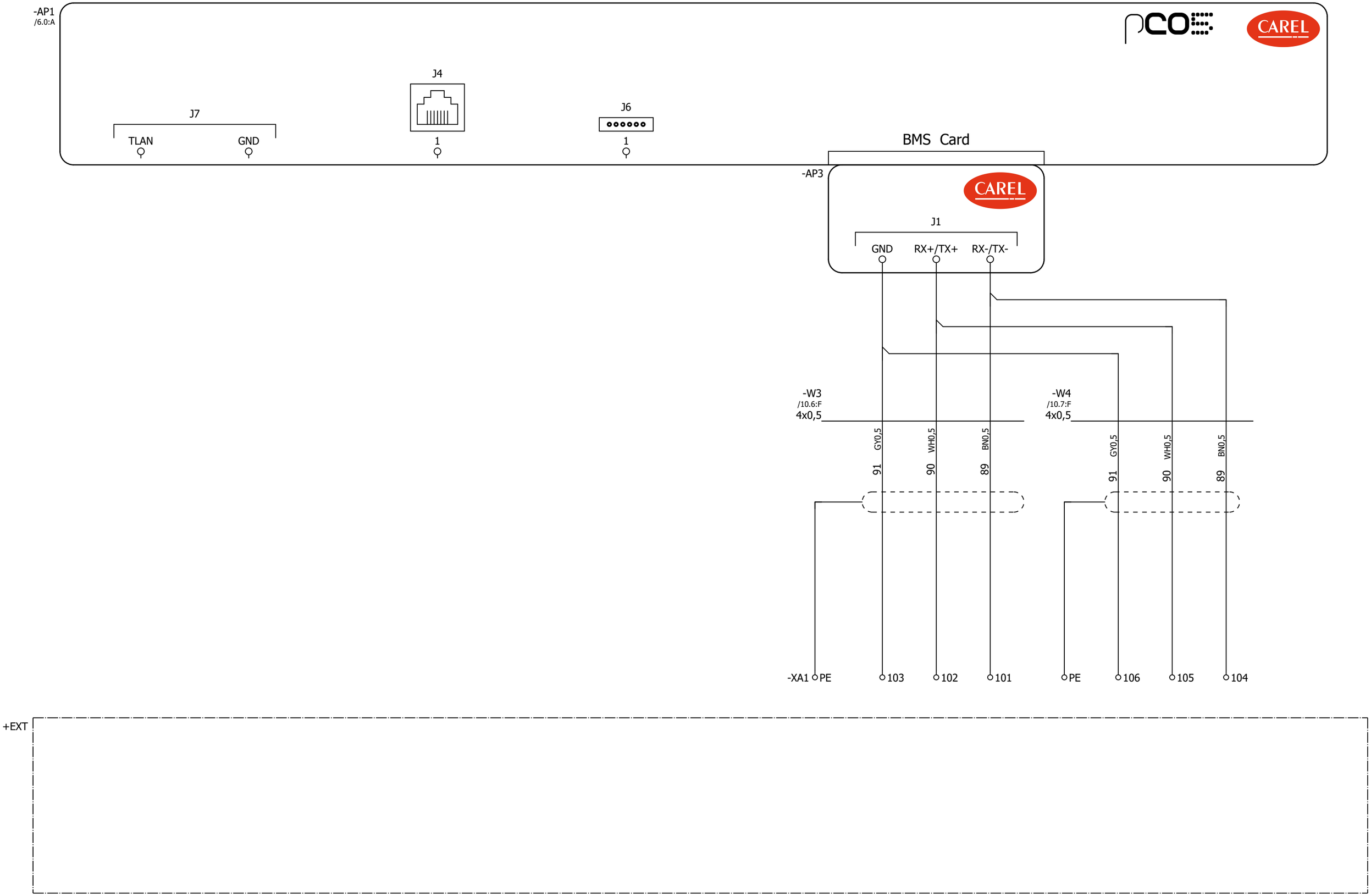

			Date	30/01/2015	CM00009390	Auxiliary circuit	Mounting locations + QE	Page +QE/10
			Elab.	Franco Meneghetti	EP 18 FANS ALFA-LUVE			Next 11
							Function =	Total pages 42
Modification	Date	Name						

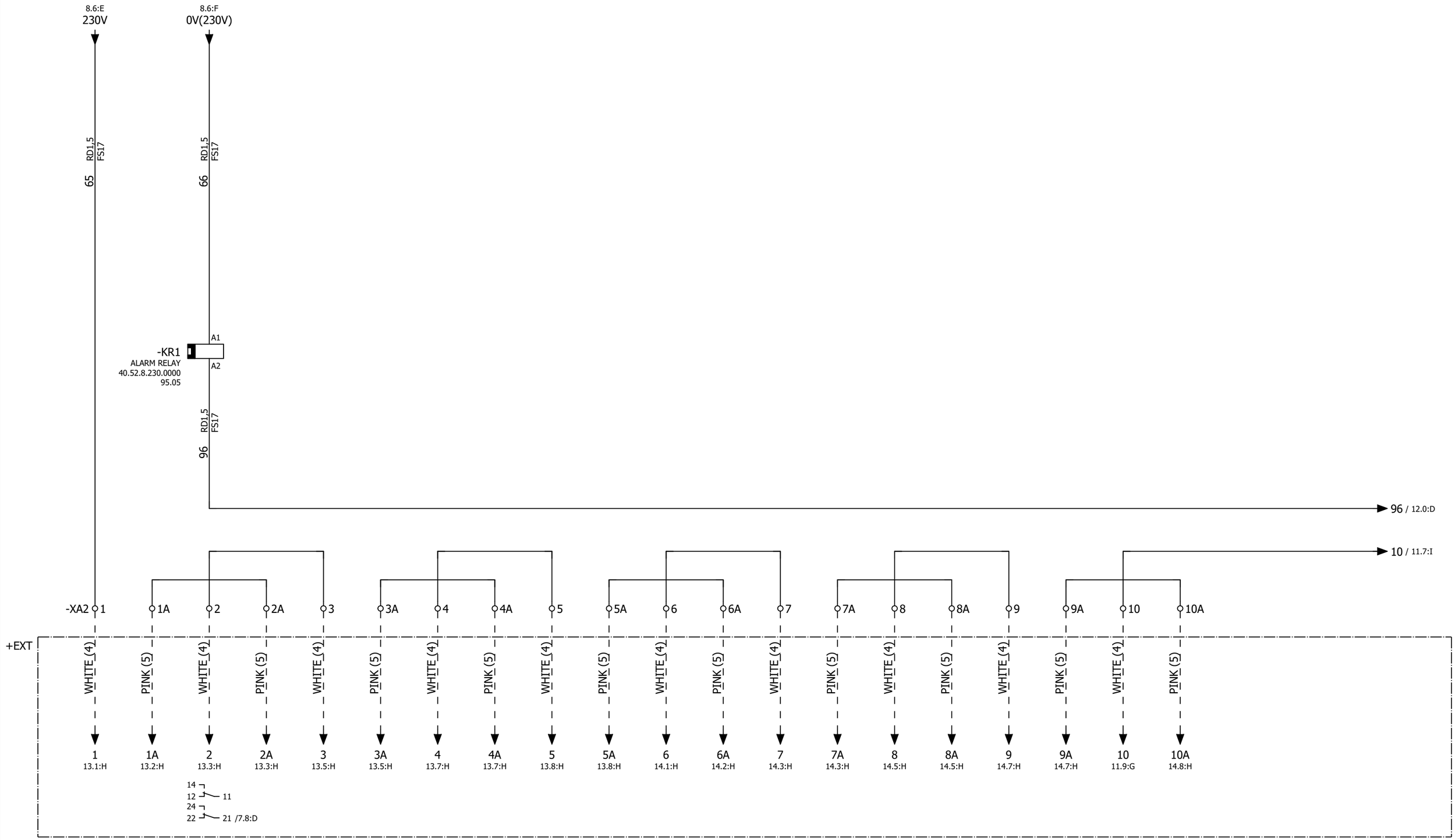

			Date	30/01/2015	CM00009390	ALFA LU-VE	Auxiliary circuit	Mounting locations + QE	Page +QE/11
			Elab.	Franco Meneghetti	EP 18 FANS ALFA-LUVE				Next 12
								Function =	Total pages 42
Modification	Date	Name							

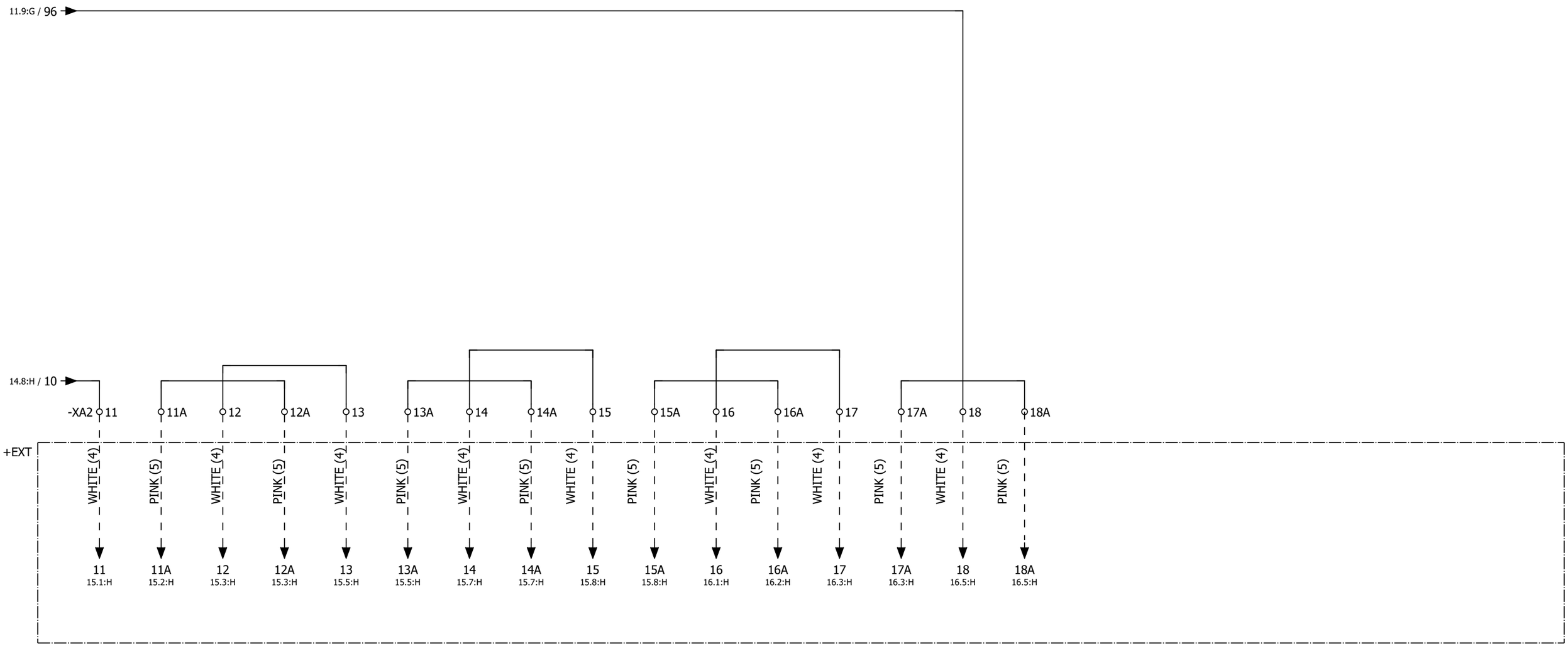

			Date	30/01/2015
			Elab.	Franco Meneghetti
Modification	Date	Name		

CM00009390

EP 18 FANS ALFA-LUVE

ALFA LU-VE

Auxiliary circuit

Mounting locations + QE

Function =

Page +QE/12

Next 13

Total pages 42

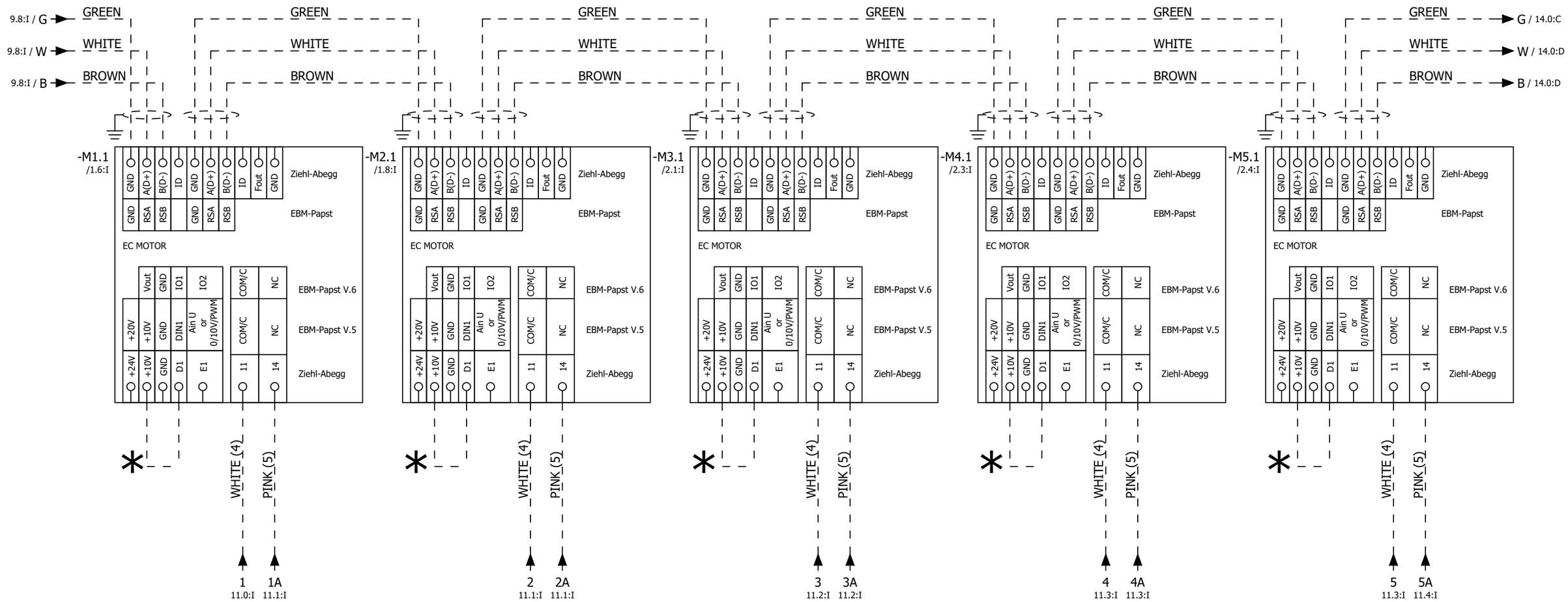

* CONNECTION NEEDED ONLY FOR ZIEHL-ABBEGG FANS

			Date	30/01/2015	CM00009390	ALFA LU-VE	Auxiliary circuit	Mounting locations + QE	Page +QE/13
			Elab.	Franco Meneghetti	EP 18 FANS ALFA-LUVE			Function =	Next 14
Modification	Date	Name							Total pages 42

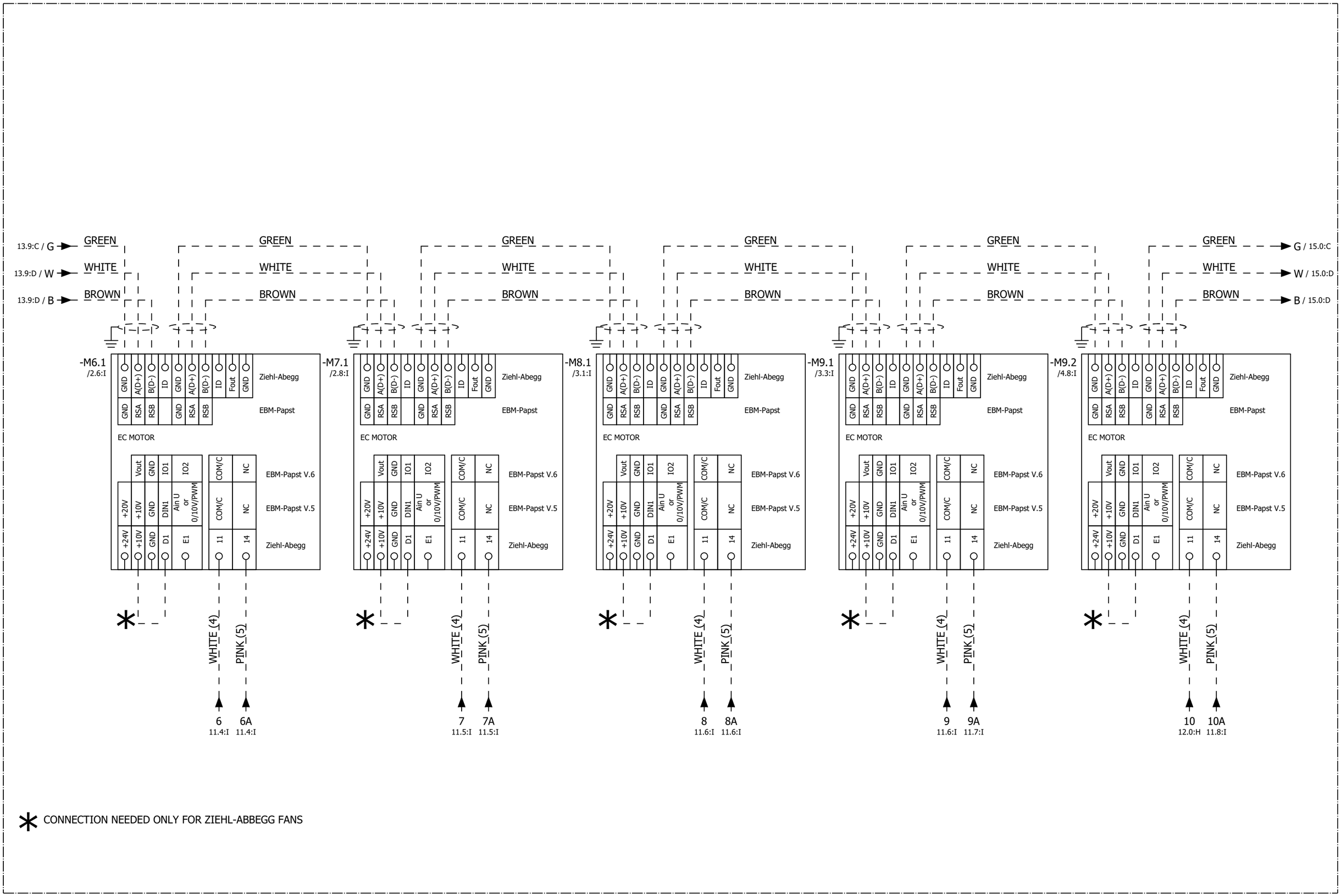

* CONNECTION NEEDED ONLY FOR ZIEHL-ABBEGG FANS

			Date	30/01/2015	CM00009390	ALFA LU-VE	Auxiliary circuit	Mounting locations + QE
			Elab.	Franco Meneghetti	EP 18 FANS ALFA-LUVE			Function =
Modification	Date	Name						

Page	+QE/14
Next	15
Total pages	42

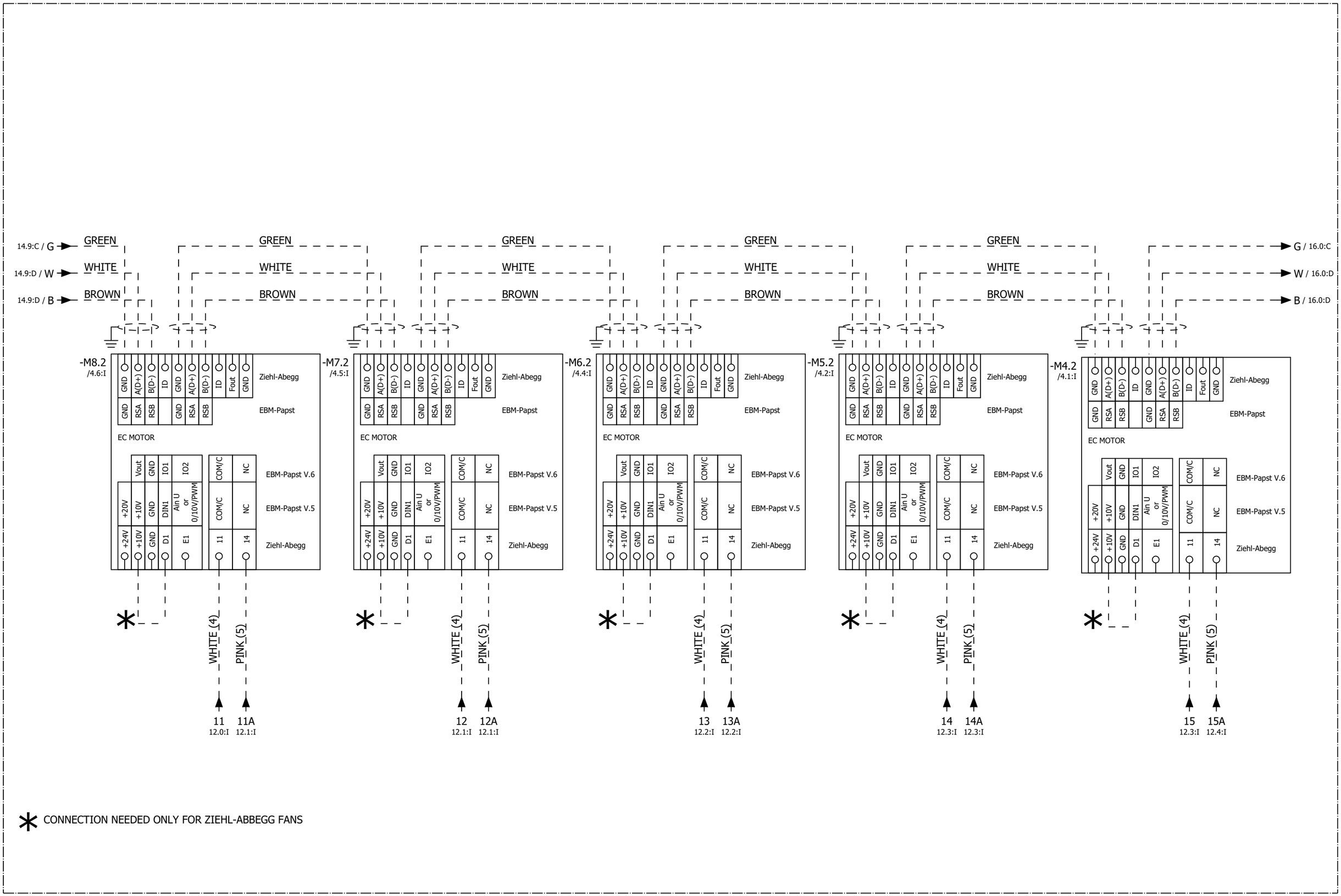

			Date	30/01/2015	CM00009390	ALFA LU-VE	Auxiliary circuit	Mounting locations + QE
			Elab.	Franco Meneghetti	EP 18 FANS ALFA-LUVE			Function =
Modification	Date	Name						

Page	+QE/15
Next	16
Total pages	42

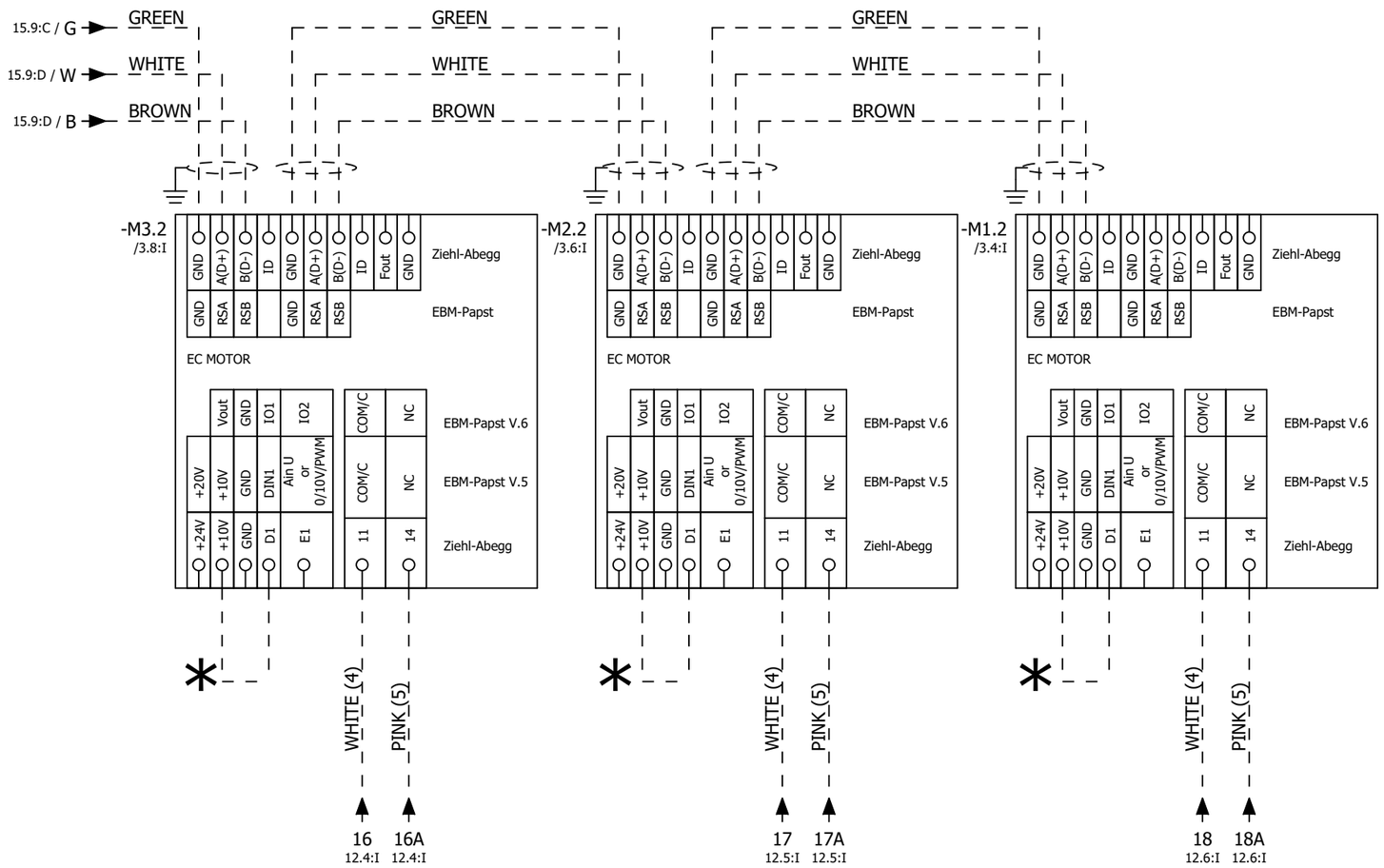

* CONNECTION NEEDED ONLY FOR ZIEHL-ABBEGG FANS

			Date	30/01/2015	CM00009390	ALFA LU-VE	Auxiliary circuit	Mounting locations + QE	Page +QE/16
			Elab.	Franco Meneghetti	EP 18 FANS ALFA-LUVE			Function =	Next 17
Modification	Date	Name							Total pages 42

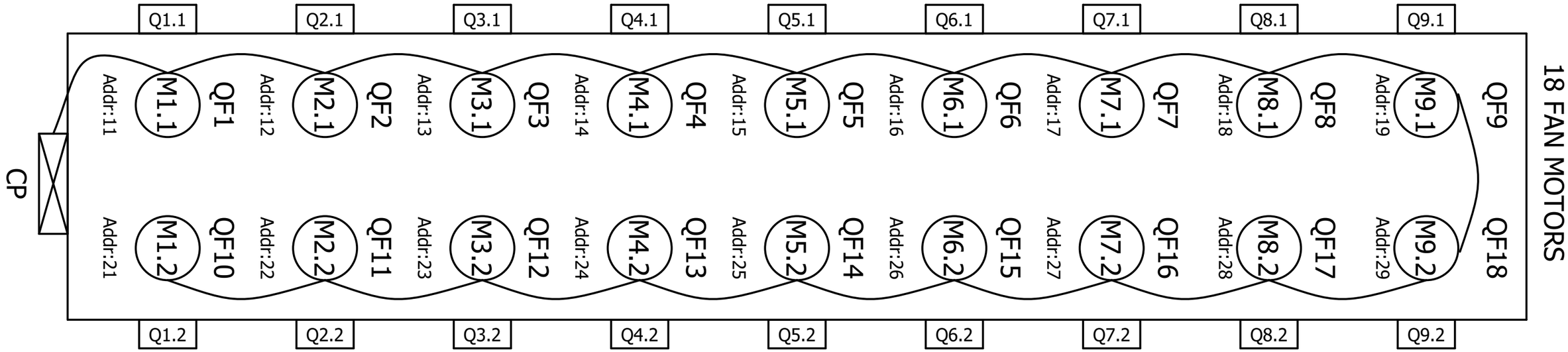

			Date	30/01/2015	CM00009390	ALFA LU-VE	Serial connection	Mounting locations + QE	Page +QE/17
			Elab.	Franco Meneghetti	EP 18 FANS ALFA-LUVE				Next 18
								Function =	Total pages 42
Modification	Date	Name							

CAREL INDUSTRIES S.p.A. - Società Unipersonale
Via dell'Industria, 11 - 35020 Brugine – Padova – Italia
Tel. (+39) 049.9716611 – Fax (+39) 049.9716600
www.carel.com – e-mail: carel@carel.com

Cap. Soc. € 10.000.000 i.v.
C.C.I.A.A. Padova Reg. Imp n. 4359090281
Part. IVA e Cod. Fisc. 04359090281
Società soggetta ad attività di direzione e coordinamento di Carel S.p.A.

CE

EU Declaration of Conformity

Manufacturer: **CAREL Industries S.p.A.**
Via dell'Industria, 11 35020 Brugine (PD) Italy

Electric Control Panels series Carel Power Solutions
Code :
Serial number:

CM00009390 / CM00009569

The manufacturer declares that all the above indicated products are in accordance with the EU Directives:

2006/95/EC (LVD)

and comply with the requirements of the following European standards:

EN 60204-1

Brugine, 01/09/2015

CAREL INDUSTRIES S.p.A.
Technical Director

Ing. Umberto Bianchini

Modification	Date	Name		Date	30/01/2015
				Elab.	Franco Meneghetti

CM00009390
EP 18 FANS ALFA-LUVE

ALFA LU-VE

Certificazione

Function	=	Mounting locations	+ QE
Total pages	42	Next	=REP1+/1,0
		Page	+QE/18

Multicore cables scheme

Cable type PROBE CABLE

Oracle code PROBE CABLE

Total Cable Length Cut:

Departure | Cross ref. | Terminator

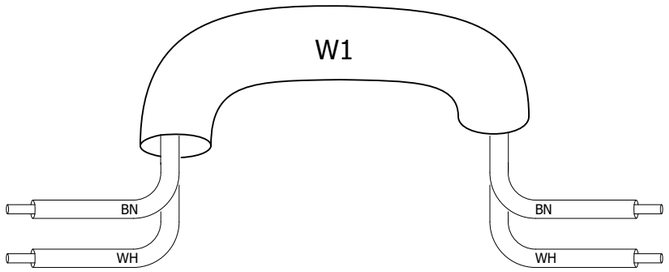

Terminator | Cross ref. | Arrival

Unsheathing cable departure

Unsheathing cable arrival

			Date	30/01/2015	CM00009390	Multicore cables scheme	Mounting locations +
			Elab.	Franco Meneghetti	EP 18 FANS ALFA-LUVE		Function =REP1
Modification	Date	Name					

ALFA LU-VE

Page	=REP1/1,0
Next	1,1
Total pages	42

Multicore cables scheme

Cable type Belden

Oracle code 1008176AXX

Total Cable Length Cut:

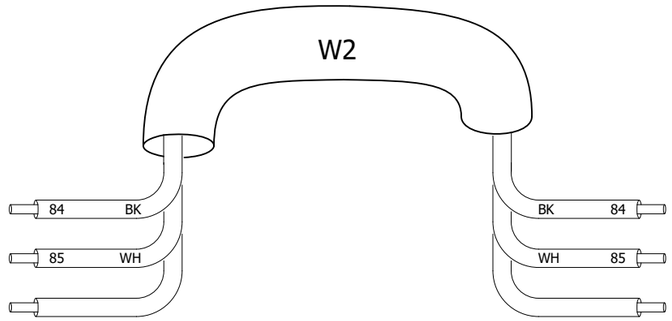

Departure	Cross ref.	Terminator	Terminator	Cross ref.	Arrival
XA1:107:A	+QE/9.8:H			+QE/9.8:B	+QE-AP1:J8 FIELD-BUS:Tx/Rx -
XA1:108:B	+QE/9.8:H			+QE/9.8:B	+QE-AP1:J8 FIELD-BUS:Tx/Rx +

Unsheathing cable departure

Unsheathing cable arrival

			Date	30/01/2015
			Elab.	Franco Meneghetti
Modification	Date	Name		

CM00009390

EP 18 FANS ALFA-LUVE

ALFA LU-VE

Multicore cables scheme

Mounting locations +

Function =REP1

Page =REP1/1,1

Next 1,2

Total pages 42

Multicore cables scheme

Carel STD-V2

Cable type Shielded 3x0.5

Oracle code 1008019AXX

Total Cable Length Cut:

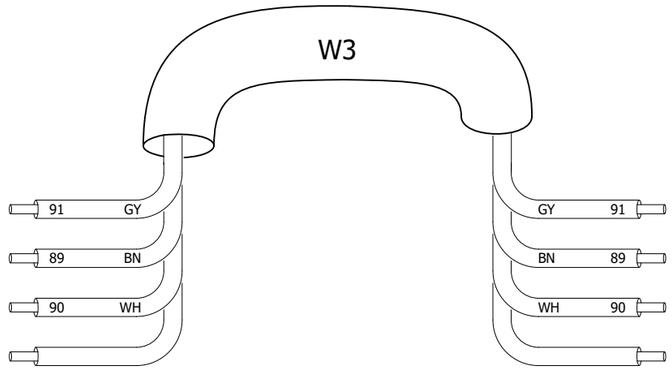

Departure	Cross ref.	Terminator	Terminator	Cross ref.	Arrival
XA1:103:A	+QE/10.6:H			+QE/10.6:C	+QE-AP3:J1:GND
XA1:101:A	+QE/10.7:H			+QE/10.7:C	+QE-AP3:J1:RX-/TX-
XA1:102:B	+QE/10.6:H			+QE/10.6:C	+QE-AP3:J1:RX+/TX+
XA1:PE:B	+QE/10.5:H			+QE/10.5:E	W3

Unsheathing cable departure

Unsheathing cable arrival

			Date	30/01/2015	CM00009390	ALFA LU-VE	Multicore cables scheme	Mounting locations +	Page =REP1/1,2
			Elab.	Franco Meneghetti	EP 18 FANS ALFA-LUVE				Next 1,3
								Function =REP1	Total pages 42
Modification	Date	Name							

Multicore cables scheme

Carel STD-V2

Cable type Shielded 3x0.5

Oracle code 1008019AXX

Total Cable Length Cut:

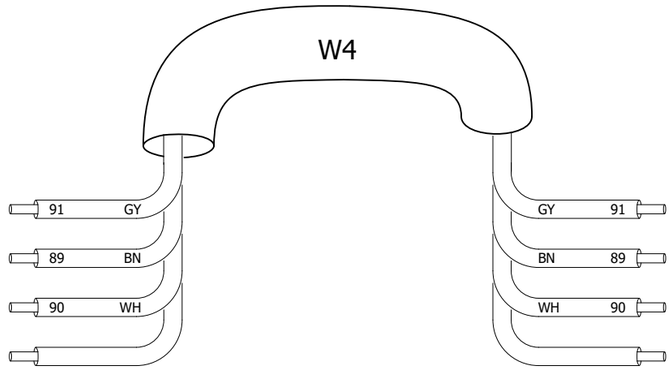

Departure	Cross ref.	Terminator	Terminator	Cross ref.	Arrival
XA1:106:B	+QE/10.8:H			+QE/10.6:C	+QE-AP3:J1:GND
XA1:104:B	+QE/10.8:H			+QE/10.7:C	+QE-AP3:J1:RX-/TX-
XA1:105:A	+QE/10.8:H			+QE/10.6:C	+QE-AP3:J1:RX+/TX+
XA1:PE:A	+QE/10.7:H			+QE/10.7:E	W4

Unsheathing cable departure

Unsheathing cable arrival

			Date	30/01/2015	CM00009390	ALFA LU-VE	Multicore cables scheme	Mounting locations +	Page =REP1/1,3
			Elab.	Franco Meneghetti	EP 18 FANS ALFA-LUVE				Next 2,0
								Function =REP1	Total pages 42
Modification	Date	Name							

Terminal diagram

Terminal strip

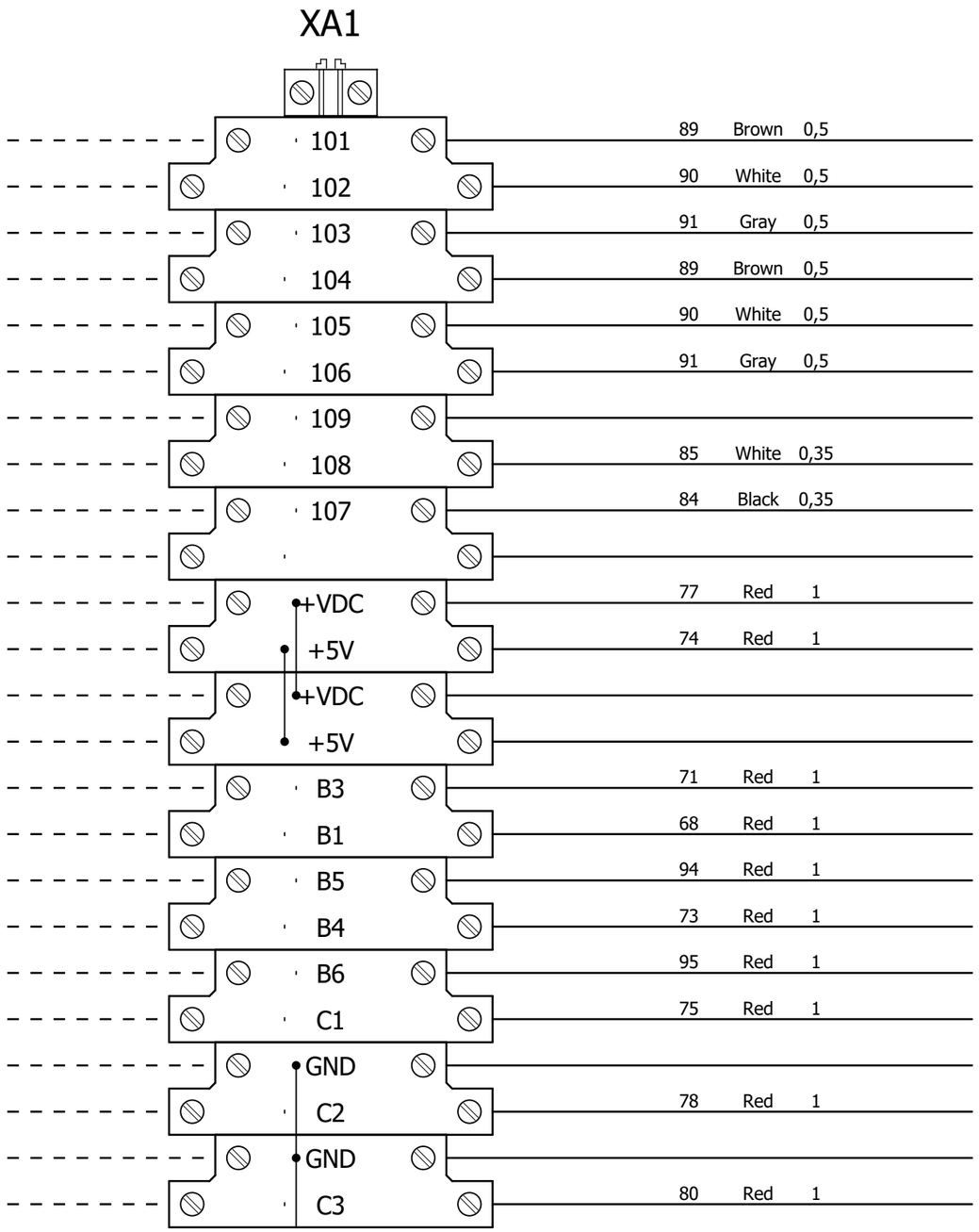

External targets	Teminal type	Terminal position on the drawings
	STTB 2,5	+QE/10.7:H
		+QE/10.6:H
	STTB 2,5	+QE/10.6:H
		+QE/10.8:H
	STTB 2,5	+QE/10.8:H
		+QE/10.8:H
	STTB 2,5	+QE/9.8:H
		+QE/9.8:H
	STTB 2,5	+QE/9.8:H
		+QE/9.9:H
	STTB 2,5	+QE/7.7:H
		+QE/7.7:H
	STTB 2,5	+QE/7.8:H
		+QE/7.7:H
	STTB 2,5	+QE/7.3:H
		+QE/7.2:H
	STTB 2,5	+QE/7.5:H
		+QE/7.4:H
	STTB 2,5	+QE/7.5:H
		+QE/6.4:H
	STTB 2,5	+QE/7.2:H
		+QE/6.8:H
	STTB 2,5	+QE/7.3:H
		+QE/8.1:H

Terminal diagram

Terminal strip

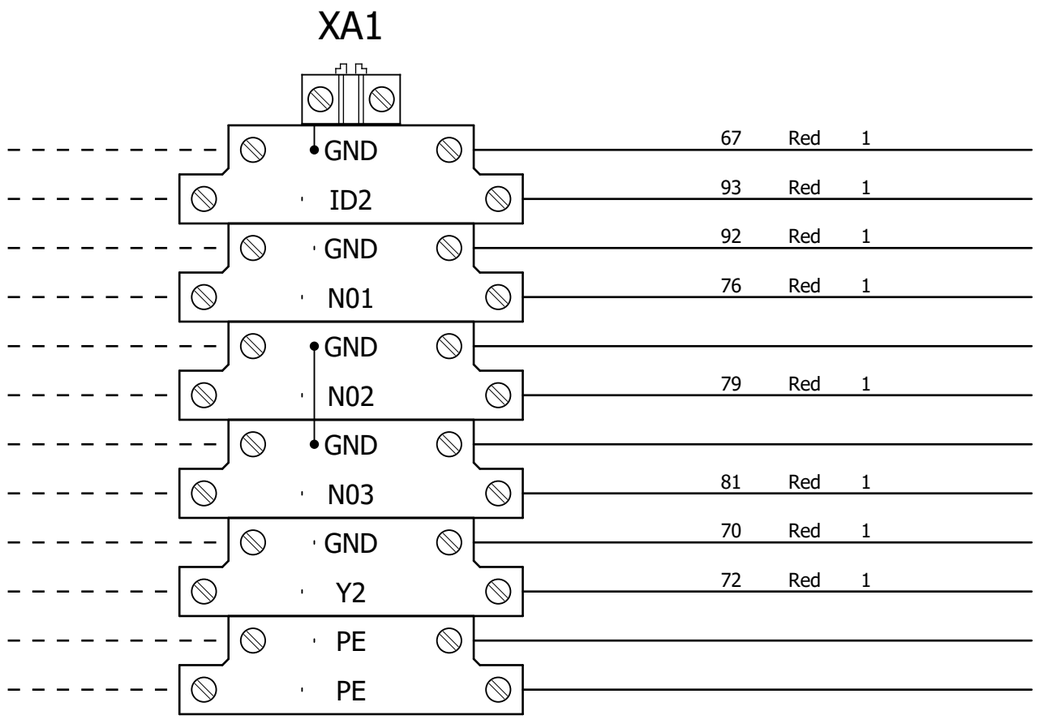

External targets	Teminal type	Terminal position on the drawings
	STTB 2,5	+QE/7.4:H
		+QE/9.1:H
	STTB 2,5	+QE/9.1:H
		+QE/6.5:H
	STTB 2,5	+QE/7.5:H
		+QE/6.8:H
	STTB 2,5	+QE/7.6:H
		+QE/8.1:H
	STTB 2,5	+QE/8.8:H
		+QE/8.8:H
	STTB 2,5-PE	+QE/10.7:H
		+QE/10.5:H

Terminal diagram

Terminal strip

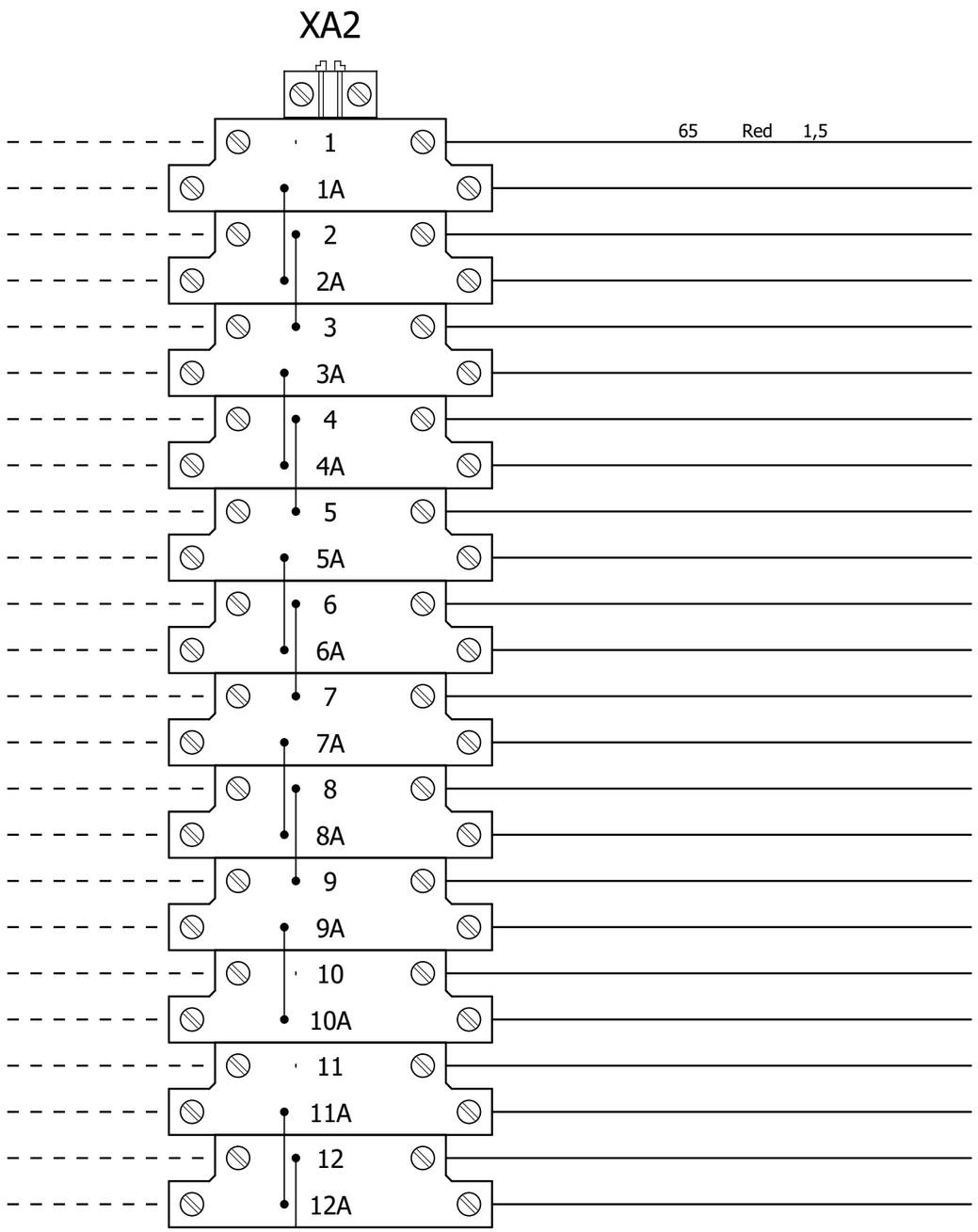

External targets	Teminal type	Terminal position on the drawings
	STTB 2,5	+QE/11.0:H
		+QE/11.1:H
	STTB 2,5	+QE/11.1:H
		+QE/11.1:H
	STTB 2,5	+QE/11.2:H
		+QE/11.2:H
	STTB 2,5	+QE/11.3:H
		+QE/11.3:H
	STTB 2,5	+QE/11.3:H
		+QE/11.4:H
	STTB 2,5	+QE/11.4:H
		+QE/11.4:H
	STTB 2,5	+QE/11.5:H
		+QE/11.5:H
	STTB 2,5	+QE/11.6:H
		+QE/11.6:H
	STTB 2,5	+QE/11.6:H
		+QE/11.7:H
	STTB 2,5	+QE/11.7:H
		+QE/11.8:H
	STTB 2,5	+QE/12.0:H
		+QE/12.1:H
	STTB 2,5	+QE/12.1:H
		+QE/12.1:H

Terminal diagram

Terminal strip

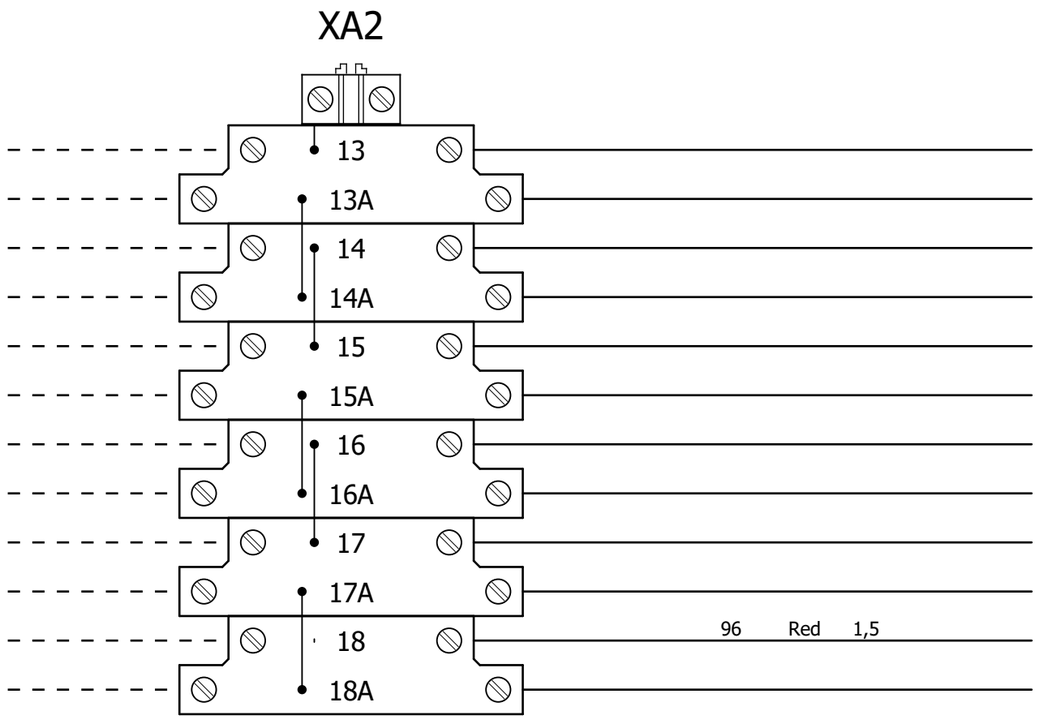

External targets	Teminal type	Terminal position on the drawings
	STTB 2,5	+QE/12.2:H
		+QE/12.2:H
	STTB 2,5	+QE/12.3:H
		+QE/12.3:H
	STTB 2,5	+QE/12.3:H
		+QE/12.4:H
	STTB 2,5	+QE/12.4:H
		+QE/12.4:H
	STTB 2,5	+QE/12.5:H
		+QE/12.5:H
	STTB 2,5	+QE/12.6:H
		+QE/12.6:H

BOM internal panel

InternoQE_F01_003

Short name	Designation	Function text	Position	Manufacturer	Component tipe	Oracle code
AP1	Programmable control		=+QE/6.0:A	CAREL	PCO Compact	PCOXLV0DB0
AP2	Damping magnet, M 5.0	FERRITE 2 SPIRE	=+QE/6.1:D	KE-KITAGAWA	FERRITE CORE	0907877AXX
AP3	Scheda seriale BMS		=+QE/10.6:B	CAREL	Scheda seriale BMS	PCOS004850
E1	Eart terminal	GROUND BAR	=+QE/1.2:D	SCHNEIDER ELECTRIC	14979	2217211AXX
E2	Eart terminal	=	=+QE/1.4:D	SCHNEIDER ELECTRIC	14979	2217211AXX
HL1	Green indicator plate	POWER ON	=+QE/6.1:F	EATON ELECTRIC	M22-L-G	0505187AXX
HL1	Plate	=	=+QE/6.1:F	CEMBRE	15X27	1800243AXX
HL1	Support plate	=	=+QE/6.1:F	CEMBRE	D22 17X30	1800242AXX
HL1	Glass plate	=	=+QE/6.1:F	CEMBRE	15X27	1800244AXX
HL1	Support	=	=+QE/6.1:F	EATON ELECTRIC	M22-A	0505184AXX
HL1	Green lap 24Vac	=	=+QE/6.1:F	EATON ELECTRIC	M22-LED-G	0505101CEL
KR1	Relay	ALARM RELAY	=+QE/11.1:E	FINDER	40.52.8.230.0000	0100751CEL
KR1	Base element	=	=+QE/11.1:E	FINDER	95.05	5931384AXX
M1	Internal fan	EXTRACTOR	=+QE/8.5:F	EZM	150x150	1312697AXX
PE	GROUND		=+QE/1.0:G		PE	PE
PE1	GROUND		=+QE/1.1:H		PE	PE
PE2	GROUND		=+QE/1.2:H		PE	PE
PE3	GROUND		=+QE/1.3:H		PE	PE
PE4	GROUND		=+QE/5.4:H		PE	PE
PE5	GROUND		=+QE/8.5:G		PE	PE
PE6	GROUND		(Quadro elettri co.MP1)		PE	PE
PE7	GROUND		(Quadro elettri co.MP1)		PE	PE
PE8	GROUND		(Quadro elettri co.MP1)		PE	PE

BOM internal panel

InternoQE_F01_003

Short name	Designation	Function text	Position	Manufacturer	Component tipe	Oracle code
PE9	GROUND		=+QE/1.5:H		PE	PE
QF1	Power circuit breaker	PROTECTION 1	=+QE/1.6:C	EATON ELECTRIC	FAZ6-C10/3	0403856CEL
QF2	Power circuit breaker	PROTECTION 2	=+QE/1.8:C	EATON ELECTRIC	FAZ6-C10/3	0403856CEL
QF3	Power circuit breaker	PROTECTION 3	=+QE/2.1:C	EATON ELECTRIC	FAZ6-C10/3	0403856CEL
QF4	Power circuit breaker	PROTECTION 4	=+QE/2.3:C	EATON ELECTRIC	FAZ6-C10/3	0403856CEL
QF5	Power circuit breaker	PROTECTION 5	=+QE/2.4:C	EATON ELECTRIC	FAZ6-C10/3	0403856CEL
QF6	Power circuit breaker	PROTECTION 6	=+QE/2.6:C	EATON ELECTRIC	FAZ6-C10/3	0403856CEL
QF7	Power circuit breaker	PROTECTION 7	=+QE/2.8:C	EATON ELECTRIC	FAZ6-C10/3	0403856CEL
QF8	Power circuit breaker	PROTECTION 8	=+QE/3.1:C	EATON ELECTRIC	FAZ6-C10/3	0403856CEL
QF9	Power circuit breaker	PROTECTION 9	=+QE/3.3:C	EATON ELECTRIC	FAZ6-C10/3	0403856CEL
QF10	Power circuit breaker	PROTECTION 10	=+QE/3.4:C	EATON ELECTRIC	FAZ6-C10/3	0403856CEL
QF11	Power circuit breaker	PROTECTION 9	=+QE/3.6:C	EATON ELECTRIC	FAZ6-C10/3	0403856CEL
QF12	Power circuit breaker	PROTECTION 10	=+QE/3.8:C	EATON ELECTRIC	FAZ6-C10/3	0403856CEL
QF13	Power circuit breaker	PROTECTION 3	=+QE/4.1:C	EATON ELECTRIC	FAZ6-C10/3	0403856CEL
QF14	Power circuit breaker	PROTECTION 9	=+QE/4.2:C	EATON ELECTRIC	FAZ6-C10/3	0403856CEL
QF15	Power circuit breaker	PROTECTION	=+QE/4.4:C	EATON ELECTRIC	FAZ6-C10/3	0403856CEL
QF16	Power circuit breaker	=	=+QE/4.5:C	EATON ELECTRIC	FAZ6-C10/3	0403856CEL
QF17	Power circuit breaker	=	=+QE/4.6:C	EATON ELECTRIC	FAZ6-C10/3	0403856CEL
QF18	Power circuit breaker	=	=+QE/4.8:C	EATON ELECTRIC	FAZ6-C10/3	0403856CEL
QF21	Power circuit breaker	TRANSFORMER PROTECTION	=+QE/5.2:B	EATON ELECTRIC	FAZ6-C4/2	0403468AXX
QF22	Power circuit breaker	SECONDARY PROTECTION 24V	=+QE/5.2:G	EATON ELECTRIC	FAZ6-C4/1	0403824AXX
QF23	Power circuit breaker	230V SECONDARY PROTECTION	=+QE/5.3:G	EATON ELECTRIC	FAZ6-C2/1	0403819AXX
QS1	Disconnect switch	MAIN SWITCH	=+QE/1.1:E	SOCOMEC	Sirco M125	0402342AXX

BOM internal panel

InternoQE_F01_003

Short name	Designation	Function text	Position	Manufacturer	Component tipe	Oracle code
QS1	Operation	MAIN SWITCH	=+QE/1.1:E	SOCOMEC	Y/R 100-125A	0402345AXX
RR1	Scaldiglia 200W 230V	HEATER E.P.	=+QE/8.4:D	EZM	091187	5729759AXX
ST1	SENSOR NTC WH IP68 -50T105 CABLE 1,5M	CABINET TEMPERATURE	=+QE/7.3:E	CAREL	NTC015WH01	NTC015WH01
TC1	TRANSFORMER	TRANSFORMER	=+QE/5.2:D		400V-230V 310VA//24V 60AV - 230V 250VA	0910244AXX

BOM external panel

EsternoQE_F01_003

Place	Short name	Function text	Position	Technical characteristics
+EXT	M1.1	Fan	=+QE/1.6:I	
+EXT	M1.2	=	=+QE/3.4:I	
+EXT	M2.1	=	=+QE/1.8:I	
+EXT	M2.2	=	=+QE/3.6:I	
+EXT	M3.1	=	=+QE/2.1:I	
+EXT	M3.2	=	=+QE/3.8:I	
+EXT	M4.1	=	=+QE/2.3:I	
+EXT	M4.2	=	=+QE/4.1:I	
+EXT	M5.1	=	=+QE/2.4:I	
+EXT	M5.2	=	=+QE/4.2:I	
+EXT	M6.1	=	=+QE/2.6:I	
+EXT	M6.2	=	=+QE/4.4:I	
+EXT	M7.1	=	=+QE/2.8:I	
+EXT	M7.2	=	=+QE/4.5:I	
+EXT	M8.1	=	=+QE/3.1:I	
+EXT	M8.2	=	=+QE/4.6:I	
+EXT	M9.1	=	=+QE/3.3:I	
+EXT	M9.2	=	=+QE/4.8:I	
+EXT	ST1	SIGNAL FOR FANS	=+QE/7.2:I	
+EXT	ST2	EXTERNAL AIR TEMP	=+QE/7.3:I	
+EXT	ST3	SIGNAL FOR FANS REGULATOR	=+QE/7.4:I	

alfa.luvegroup.com

Product code	CM00009728	Rev	5
Project description	EP 4 FANS ALFA-LUVE		

Supply voltage	3P+N+E - 400V - 50Hz	Operating temperature	40°C
Rated current	26A Icc 6KA		
Auxiliary voltage	24Vac/230Vac		

Designed by	Franco Meneghetti	on	23/12/2015
Checked by	Mattia Bortolotto	on	23/12/2015
Approved by	Luca Tessaro	on	23/12/2015

NOT ALLOWED DELIVER TO THIRD PARTIES OR REPRODUCE THIS DOCUMENT NOT USE THE CONTENT OR OTHERWISE MAKE KNOWN TO THIRD PARTIES WITHOUT OUR EXPRESS PERMISSION. ANY INFRINGEMENT WILL RESULT IN DAMAGES SUFFERED. And it MADE SUBJECT TO ALL RIGHTS UNDER PATENTS OR MODELS

Cables Range

Cross-sect	N07V-K Range (A)	N07G9 Range (A)
0,5	\	NOT AVAILABLE
0,75	\	NOT AVAILABLE
1	8A	12A
1,5	11A	16A
2,5	15A	22.4A
4	20A	29.6A
6	26A	38.4A
10	36A	52.8A
16	48A	70.4A
25	64A	93.6A
35	80A	115.2A
50	95A	140A
95	150A	177.6A
120	170A	215.2A
150	195A	NOT AVAILABLE
185	220A	NOT AVAILABLE
240	260A	NOT AVAILABLE
300	300A	NOT AVAILABLE

Colors Table

Colors	Short name
Red	RD
Black	BK
Yellow	YE
Yellow\Green	GNYE
Orange	OG
Light blue	TQ
Blue	BU
Pink	PK
White	WH
Gray	GY
Brown	BN
Green	GN
Purple	VT
\	
\	
\	
\	

REVIEW TABLE

Rev.	Technical name	Date	Note
01	Meneghetti F.	09/02/2016	- -
02	Meneghetti F.	21/03/2016	- -
03	Meneghetti F.	21/05/2018	- -
04	Quaggia L.	29/10/2018	- -
05	Quaggia L.	10/09/2019	- -

Table of contents

F06_003

Page	Page type	Page description	Date	Edited by
/1	Title page / cover sheet	Title page	29/01/2020	Luca Quaggia
/2	Pre-planning	Technical information	29/01/2020	Luca Quaggia
/3	Table of contents	Table of contents	29/01/2020	Luca Quaggia
/4	Model view	General view	29/01/2020	Luca Quaggia
/5	Model view	View of all sides	29/01/2020	Luca Quaggia
/6	Model view	Mounting plate view	29/01/2020	Luca Quaggia
/7	Model view	Door view	29/01/2020	Luca Quaggia
/8	Model view	Guides view	29/01/2020	Luca Quaggia
/9	Model view	Channels view	29/01/2020	Luca Quaggia
/10	Model view	Bottom view	29/01/2020	Luca Quaggia
+QE/1	Schematic multi-line	Power circuit	29/01/2020	Luca Quaggia
+QE/2	Schematic multi-line	Power circuit	29/01/2020	Luca Quaggia
+QE/4	Schematic multi-line	Power circuit	29/01/2020	Luca Quaggia
+QE/5	Schematic multi-line	Auxiliary circuit	29/01/2020	Luca Quaggia
+QE/7	Schematic multi-line	Auxiliary circuit	29/01/2020	Luca Quaggia
+QE/8.a	Schematic multi-line	Auxiliary circuit	29/01/2020	Luca Quaggia
+QE/9	Schematic multi-line	Auxiliary circuit	29/01/2020	Luca Quaggia
+QE/11	Schematic multi-line	Auxiliary circuit	29/01/2020	Luca Quaggia
+QE/13	Schematic multi-line	Auxiliary circuit	29/01/2020	Luca Quaggia
+QE/15	Schematic multi-line	Auxiliary circuit	29/01/2020	Luca Quaggia
+QE/16	Schematic multi-line	Auxiliary circuit	29/01/2020	Luca Quaggia
+QE/18	Graphic	Serial connection	29/01/2020	Luca Quaggia
+QE/19	Graphic	Certificazione	29/01/2020	Luca Quaggia
=REP1/1,0	Cable diagram	Multicore cables scheme	29/01/2020	Luca Quaggia
=REP1/1,2	Cable diagram	Multicore cables scheme	29/01/2020	Luca Quaggia
=REP1/2,0	Terminal diagram	Terminal strip	29/01/2020	Luca Quaggia
=REP1/2,0.a	Terminal diagram	Terminal strip	29/01/2020	Luca Quaggia
=REP1/2,1	Terminal diagram	Terminal strip	29/01/2020	Luca Quaggia
=REP1/3,0	Parts list	BOM internal panel	29/01/2020	Luca Quaggia
=REP1/3,0.a	Parts list	BOM internal panel	29/01/2020	Luca Quaggia
=REP1/4,0	Parts list	BOM external panel	29/01/2020	Luca Quaggia

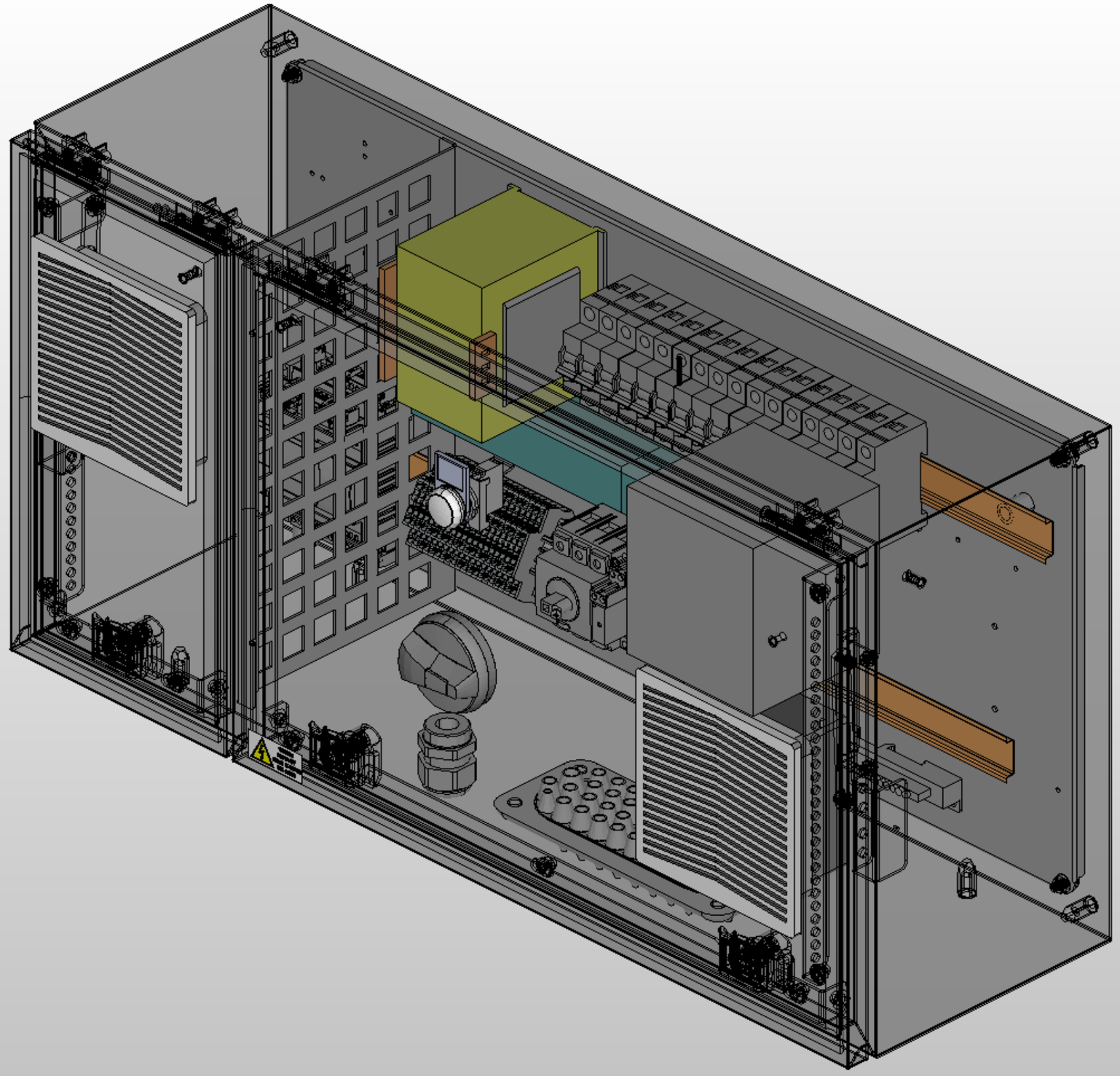

			Date	23/12/2015	CM00009728	ALFA LU-VE	General view	Mounting locations +	Page /4
			Elab.	Franco Meneghetti	EP 4 FANS ALFA-LUVE				Next 5
								Function =	Total pages 31
Modification	Date	Name							

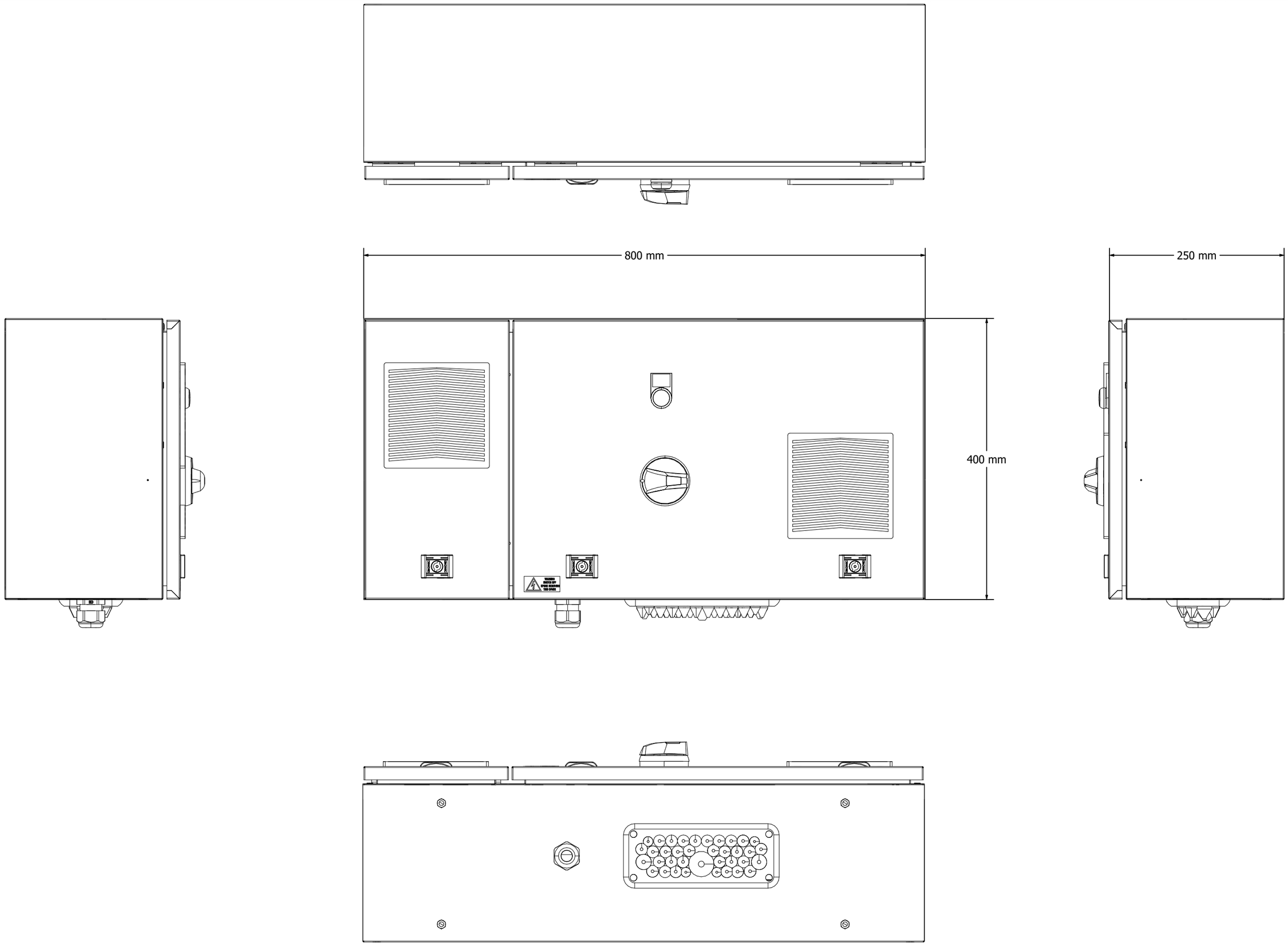

			Date	23/12/2015	CM00009728	ALFA LU-VE	View of all sides	Mounting locations +	Page /5
			Elab.	Franco Meneghetti	EP 4 FANS ALFA-LUVE				Next 6
Modification	Date	Name						Function =	Total pages 31

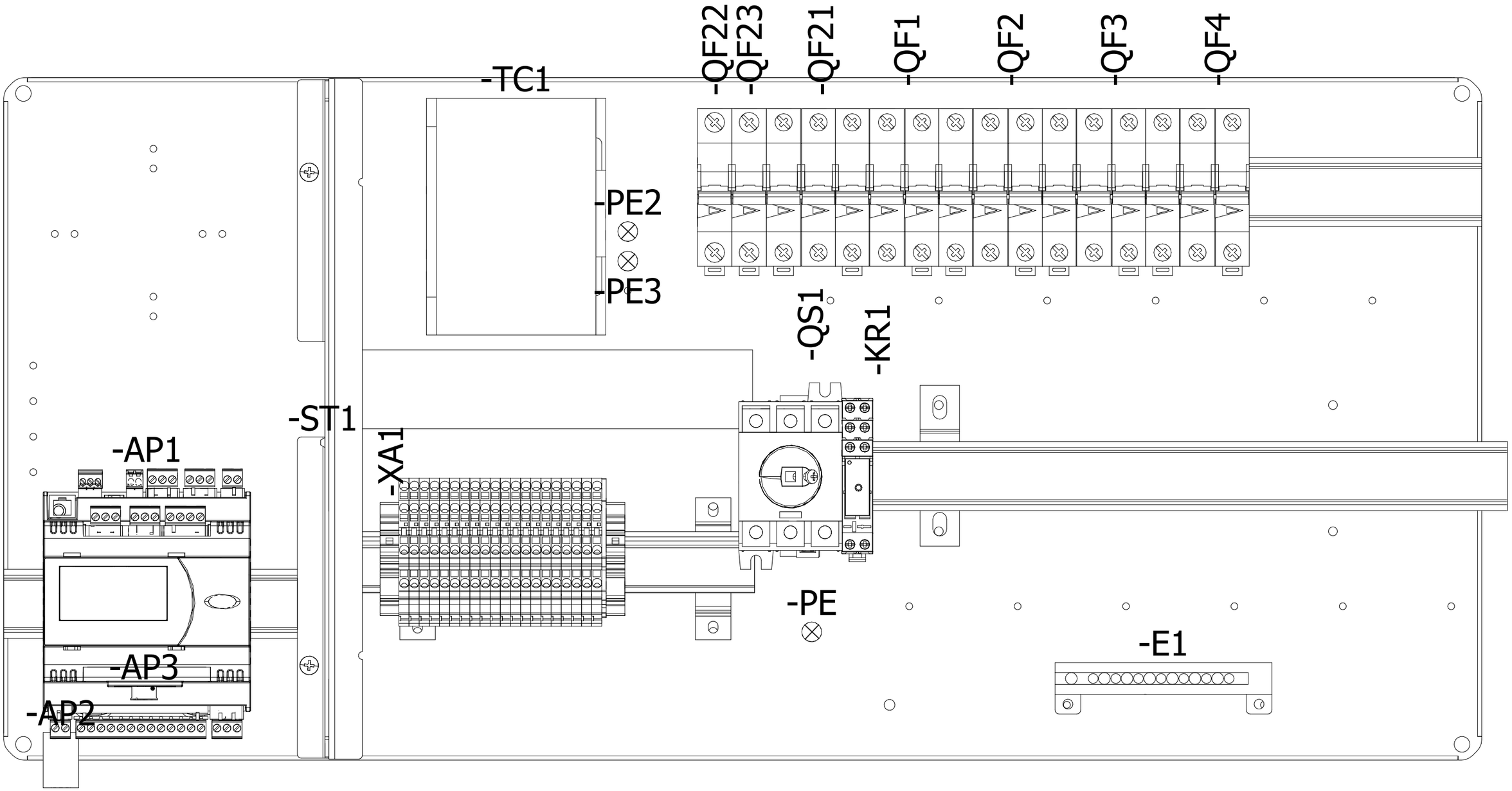

			Date	23/12/2015	CM00009728	ALFA LU-VE	Mounting plate view	Mounting locations +	Page /6
			Elab.	Franco Meneghetti	EP 4 FANS ALFA-LUVE				Next 7
								Function =	Total pages 31
Modification	Date	Name							

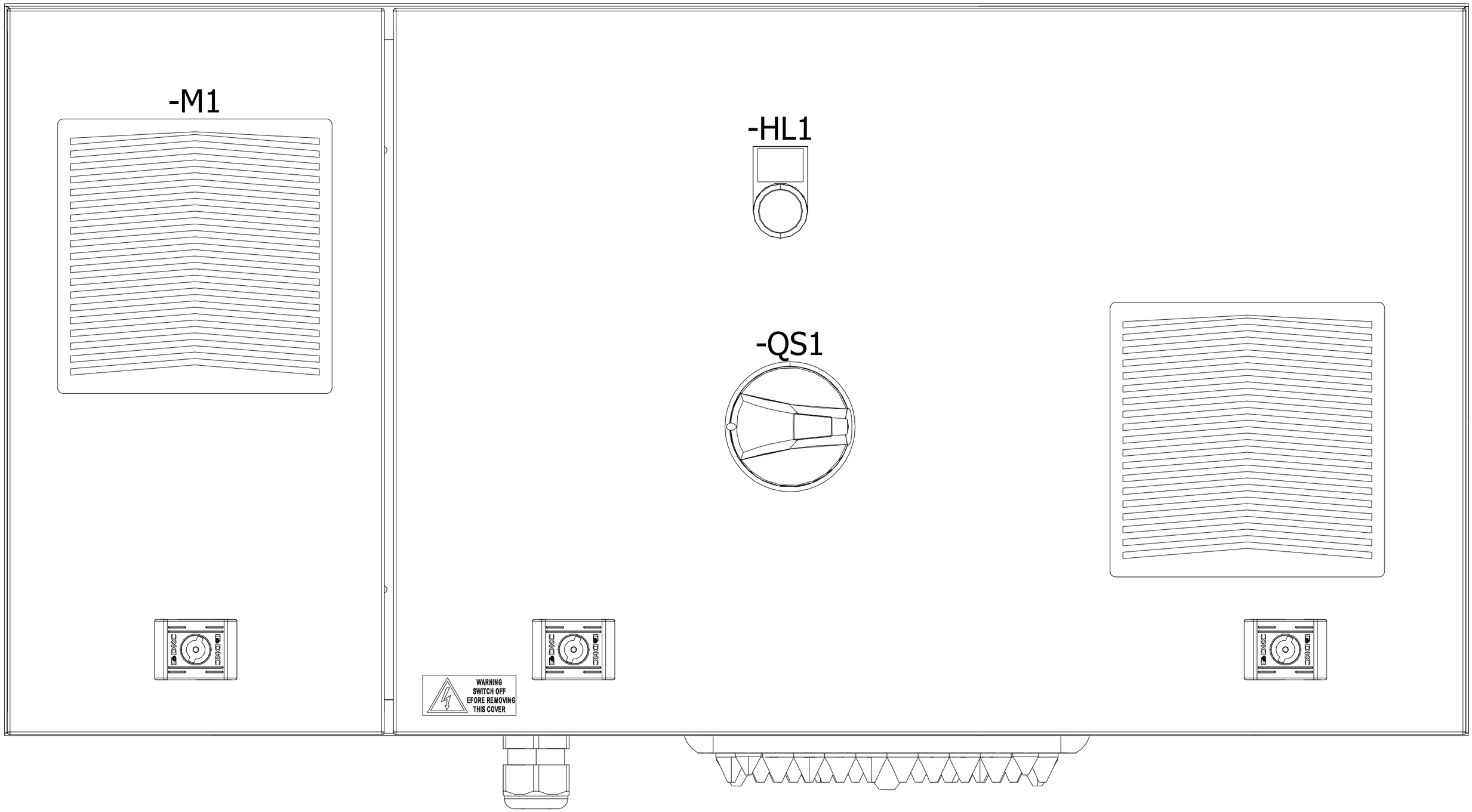

			Date	23/12/2015	CM00009728	ALFA LU-VE	Door view	Mounting locations +	Page /7
			Elab.	Franco Meneghetti	EP 4 FANS ALFA-LUVE				Next 8
								Function =	Total pages 31
Modification	Date	Name							

Layout guides and channels

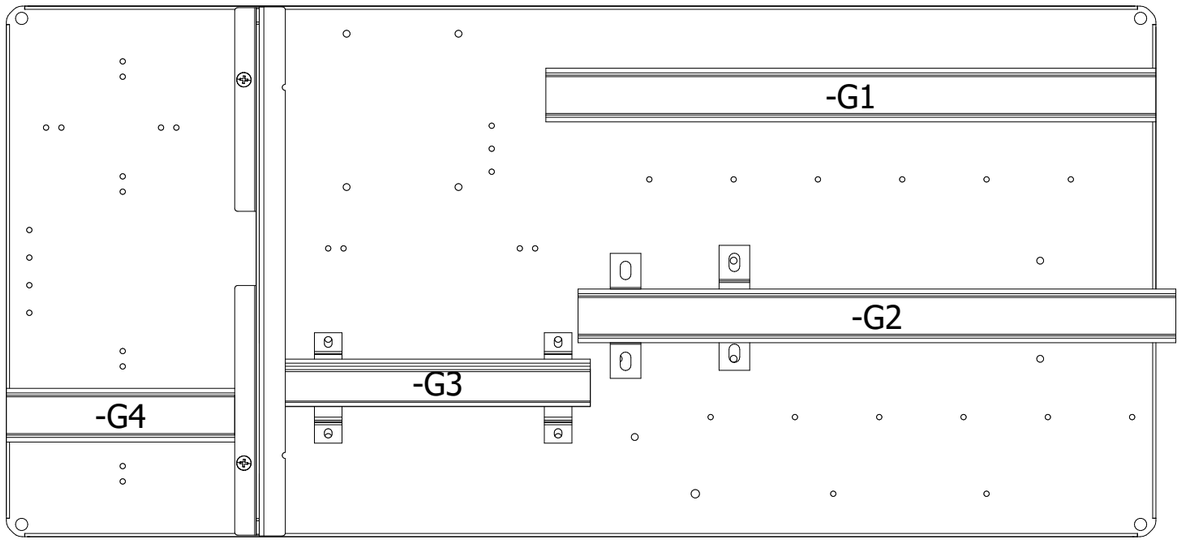

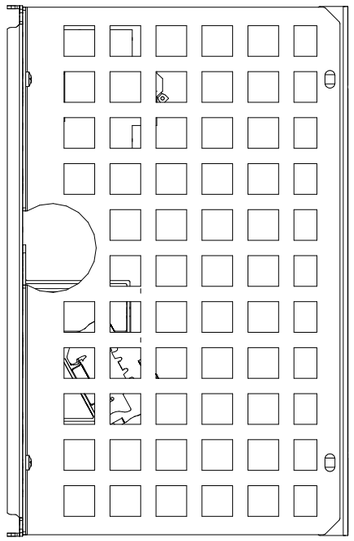

Sign	Type	Length (Tollerance -5mm)
U6	Inclined Bracket	
U7	Inclined Bracket	

G1	35x7.5	400 mm
G2	35x7.5	390 mm
G3	35x7.5	200 mm
G4	35x7.5	150 mm

U5	Support H=70mm	
U4	Support H=70mm	

U1	2cm Rise	
U2	2cm Rise	
U3	2cm Rise	

Empty

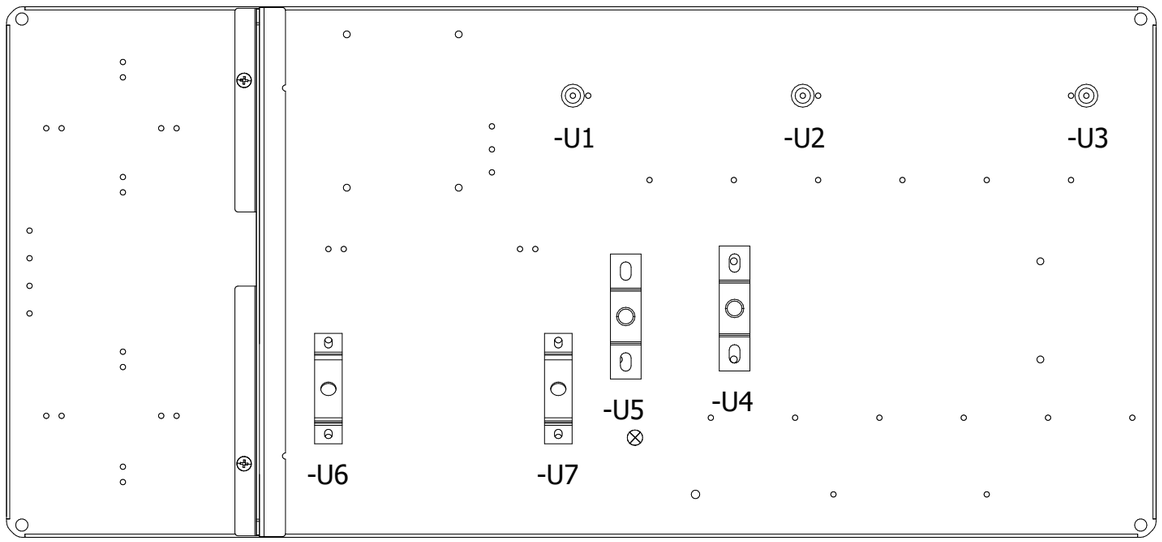

Empty

			Date	23/12/2015
			Elab.	Franco Meneghetti
Modification	Date	Name		

CM00009728

EP 4 FANS ALFA-LUVE

ALFA LU-VE

Guides view

Mounting locations +

Function =

Page /8

Next 9

Total pages 31

Layout guides and channels

Sign	Type	Length (Tollerance -5mm)
C1	40x60	205 mm

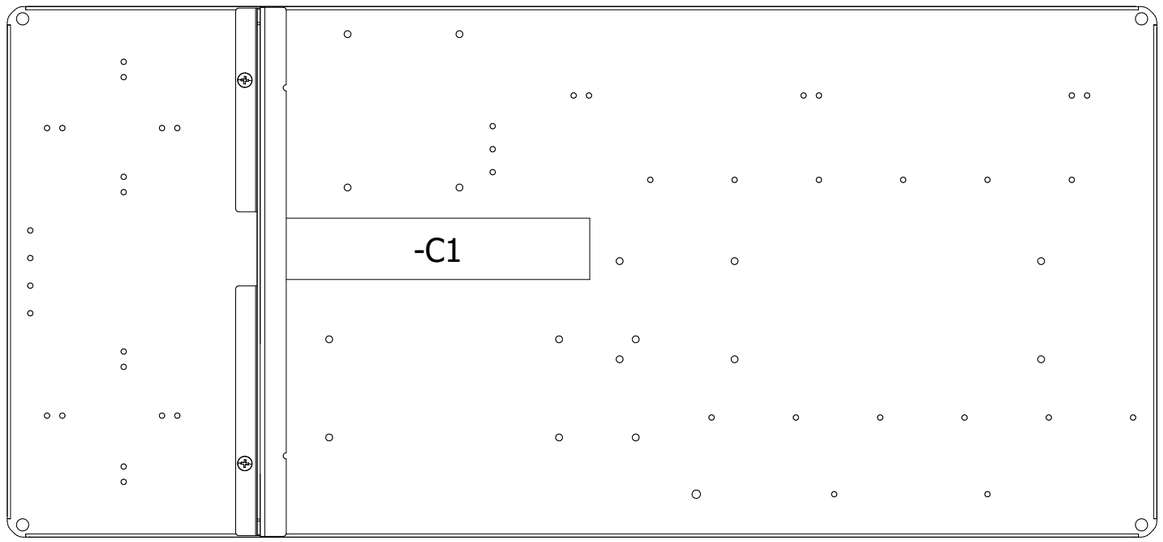

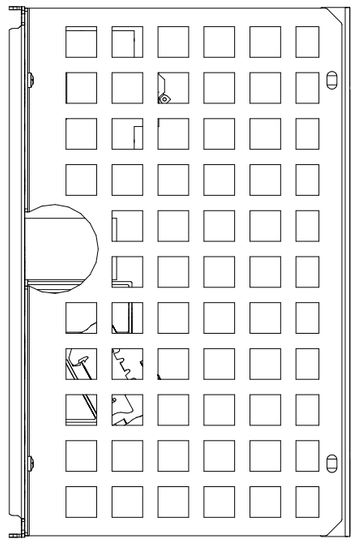

			Date	23/12/2015
			Elab.	Franco Meneghetti
Modification	Date	Name		

CM00009728

EP 4 FANS ALFA-LUVE

ALFA LU-VE

Channels view

Mounting locations +

Function =

Page /9

Next 10

Total pages 31

Cable entry/exit components

Item number	Component tipe	Drilling (Tollerance +-0.5mm)
1	M32 Gland	Ø 32.5mm
2	Multi-cable gland	

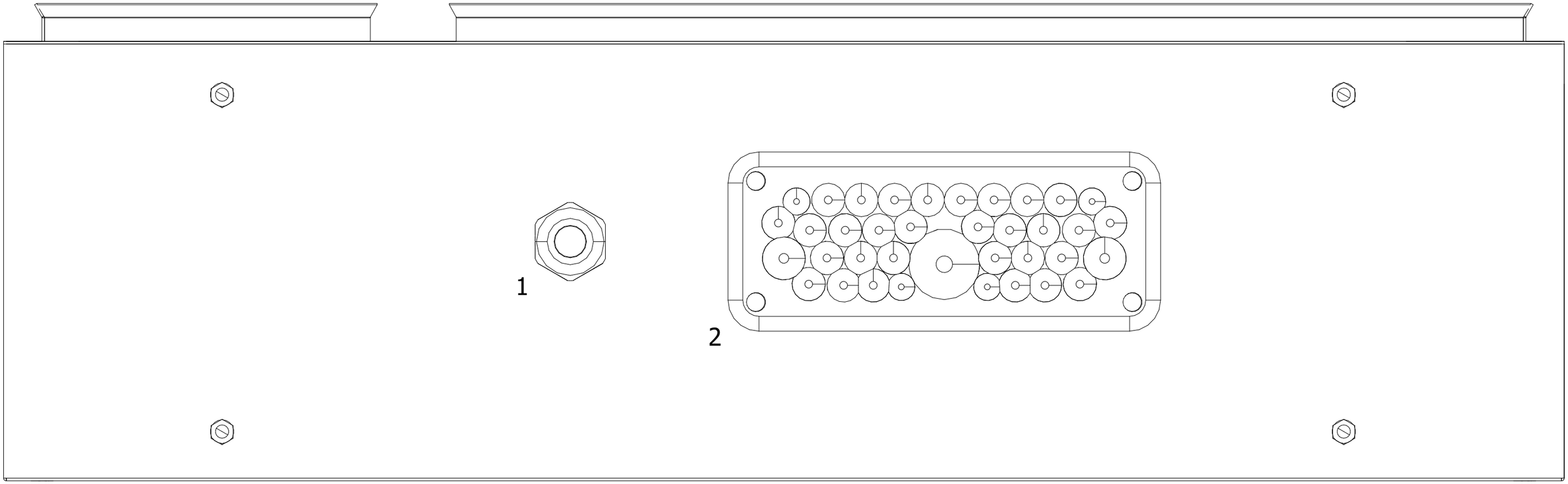

			Date	23/12/2015
			Elab.	Franco Meneghetti
Modification	Date	Name		

CM00009728

EP 4 FANS ALFA-LUVE

Bottom view

Mounting locations +

Function =

Page /10

Next +QE/1

Total pages 31

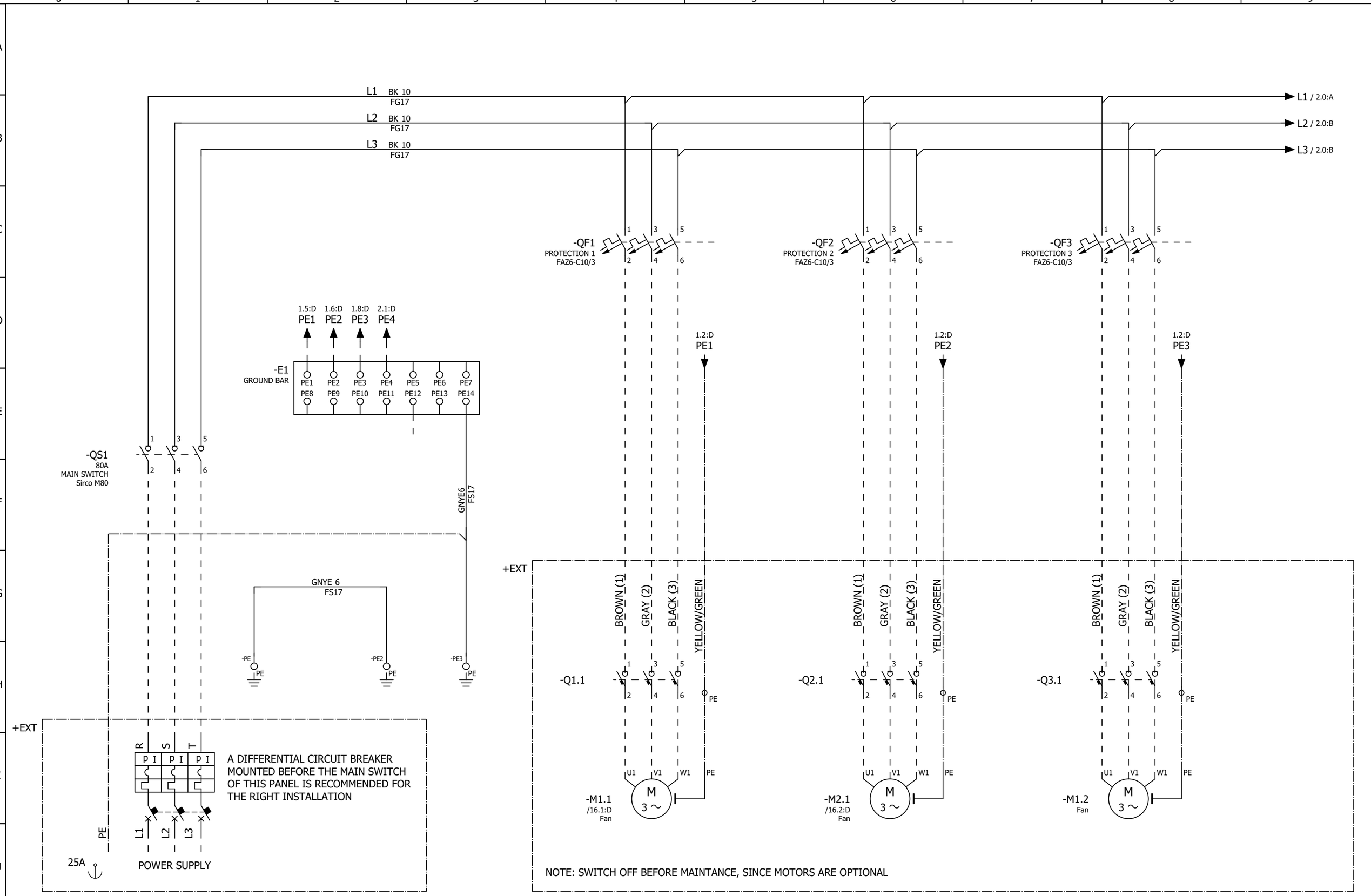

			Date	23/12/2015
			Elab.	Franco Meneghetti
Modification	Date	Name		

CM00009728

EP 4 FANS ALFA-LUVE

ALFA LU-VE

Power circuit

Mounting locations + QE

Function =

Page +QE/1

Next 2

Total pages 31

			Date	23/12/2015	CM00009728	Power circuit	Mounting locations + QE	Page +QE/2
			Elab.	Franco Meneghetti	EP 4 FANS ALFA-LUVE		Function =	Next 4
Modification	Date	Name						Total pages 31

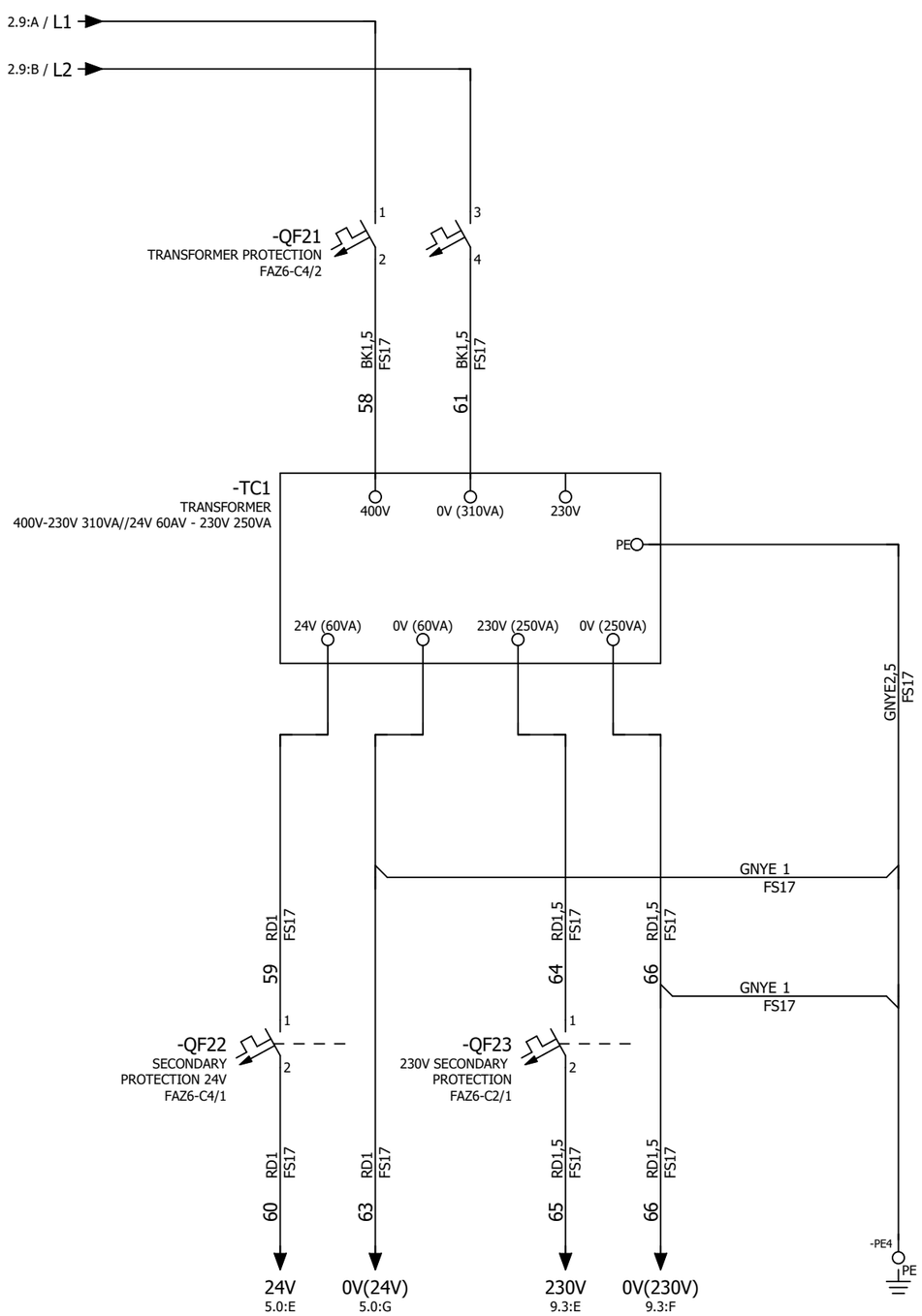

			Date	23/12/2015	CM00009728	ALFA LU-VE	Power circuit	Mounting locations + QE	Page +QE/4
			Elab.	Franco Meneghetti	EP 4 FANS ALFA-LUVE			Function =	Next 5
Modification	Date	Name							Total pages 31

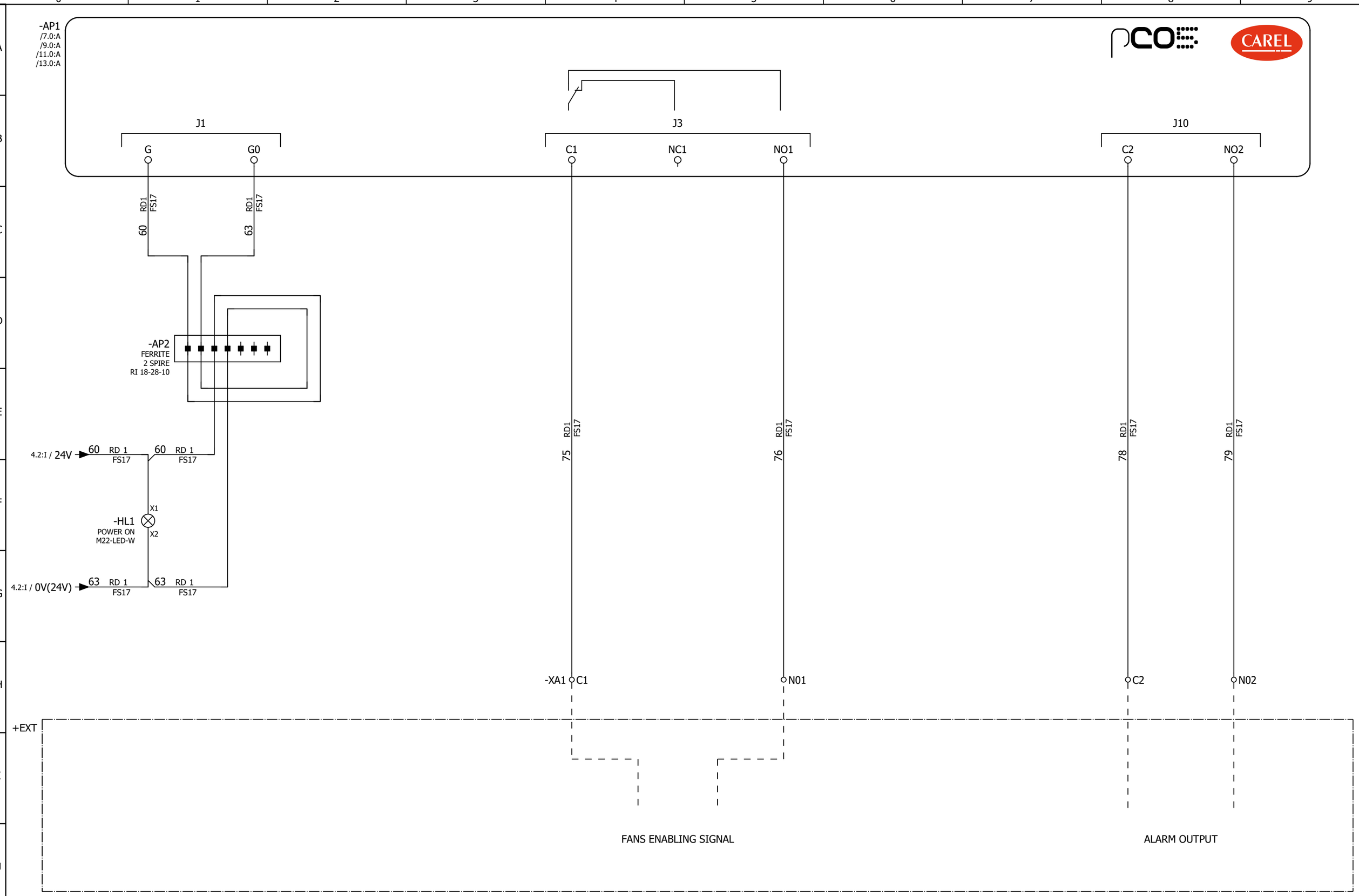

			Date	23/12/2015
			Elab.	Franco Meneghetti
Modification	Date	Name		

CM00009728

EP 4 FANS ALFA-LUVE

Auxiliary circuit

Mounting locations + QE

Function =

Page +QE/5

Next 7

Total pages 31

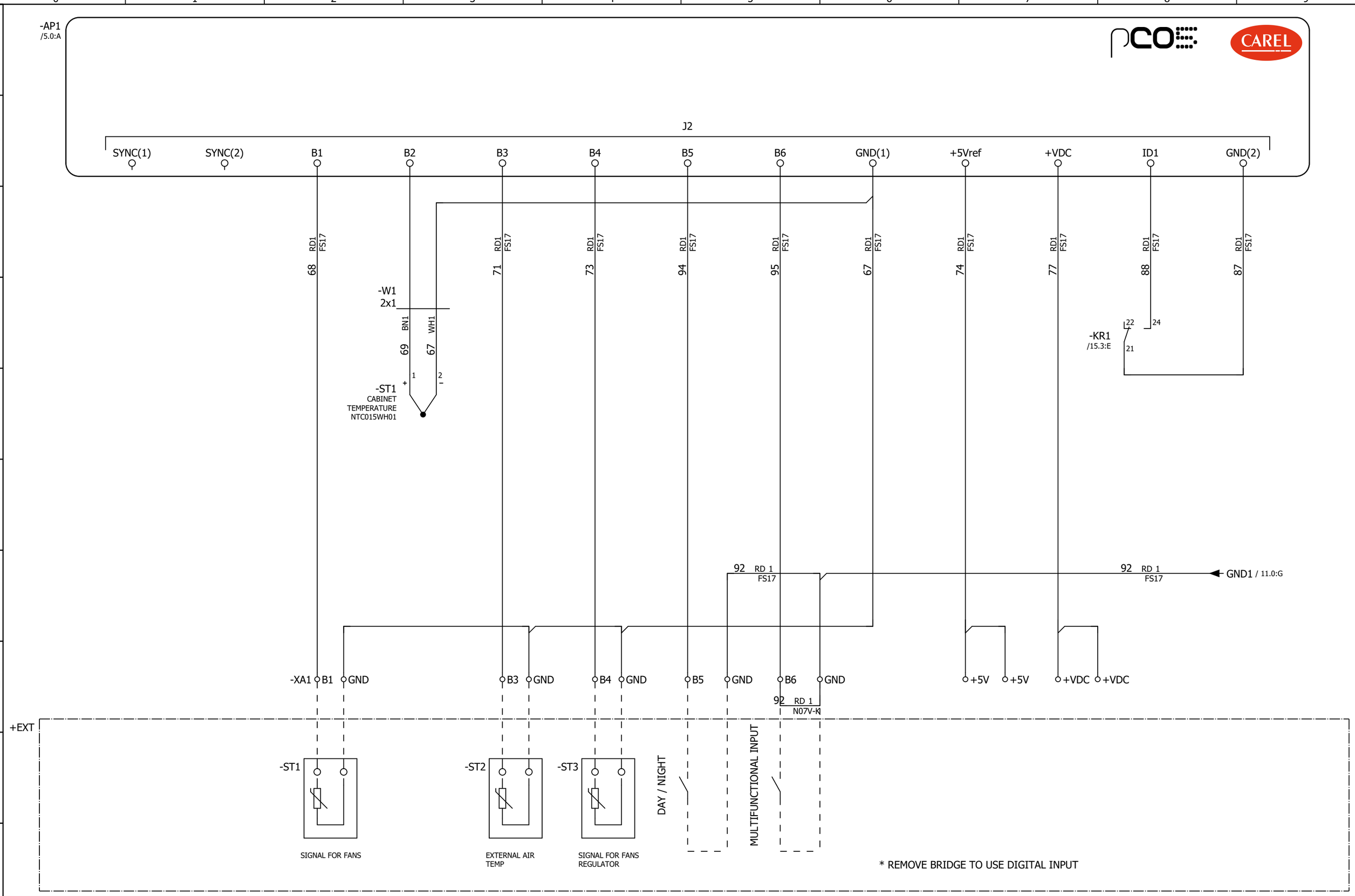

			Date	23/12/2015
			Elab.	Franco Meneghetti
Modification	Date	Name		

CM00009728

EP 4 FANS ALFA-LUVE

Auxiliary circuit

Mounting locations + QE

Function =

Page +QE/7

Next 8.a

Total pages 31

NO PT1000
B1 SIGNAL FOR FANS (NTC)
B2 E.P. TEMPERATURE (NTC)
B3 EXTERNAL AIR TEMPERATURE (NTC)
B4 ----------

WITH PT1000
B1 ----------
B2 E.P. TEMPERATURE (NTC)
B3 EXTERNAL AIR TEMPERATURE (NTC)
B4 SIGNAL FOR FANS (PT1000)

PROBE CONNECTIONS

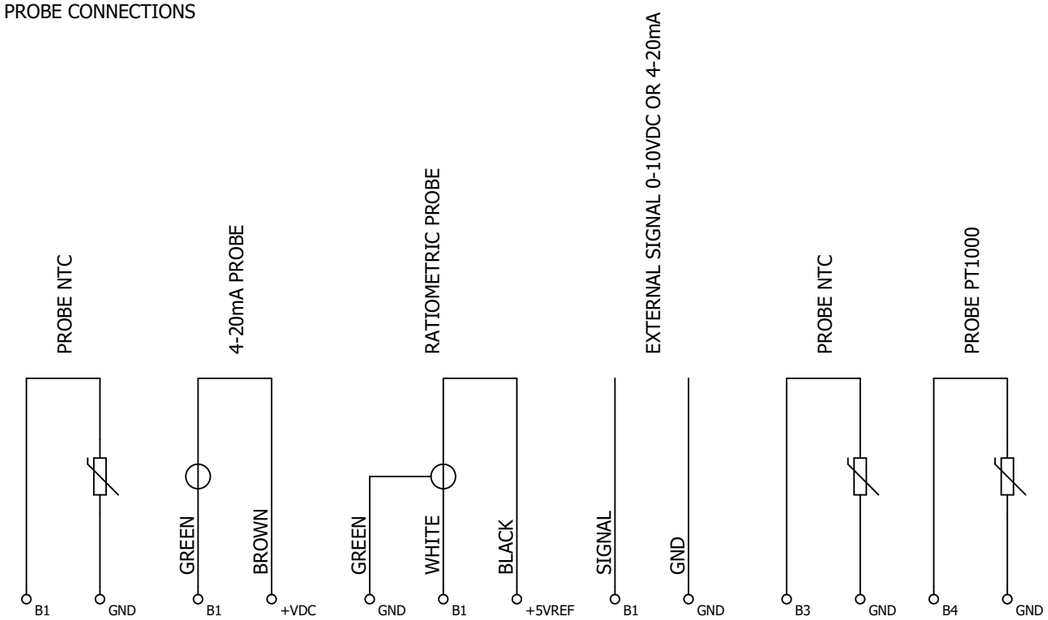

			Date	23/12/2015
			Elab.	Franco Meneghetti
Modification	Date	Name		

CM00009728

EP 4 FANS ALFA-LUVE

ALFA LU-VE

Auxiliary circuit

Mounting locations + QE

Function =

Page +QE/8.a

Next 9

Total pages 31

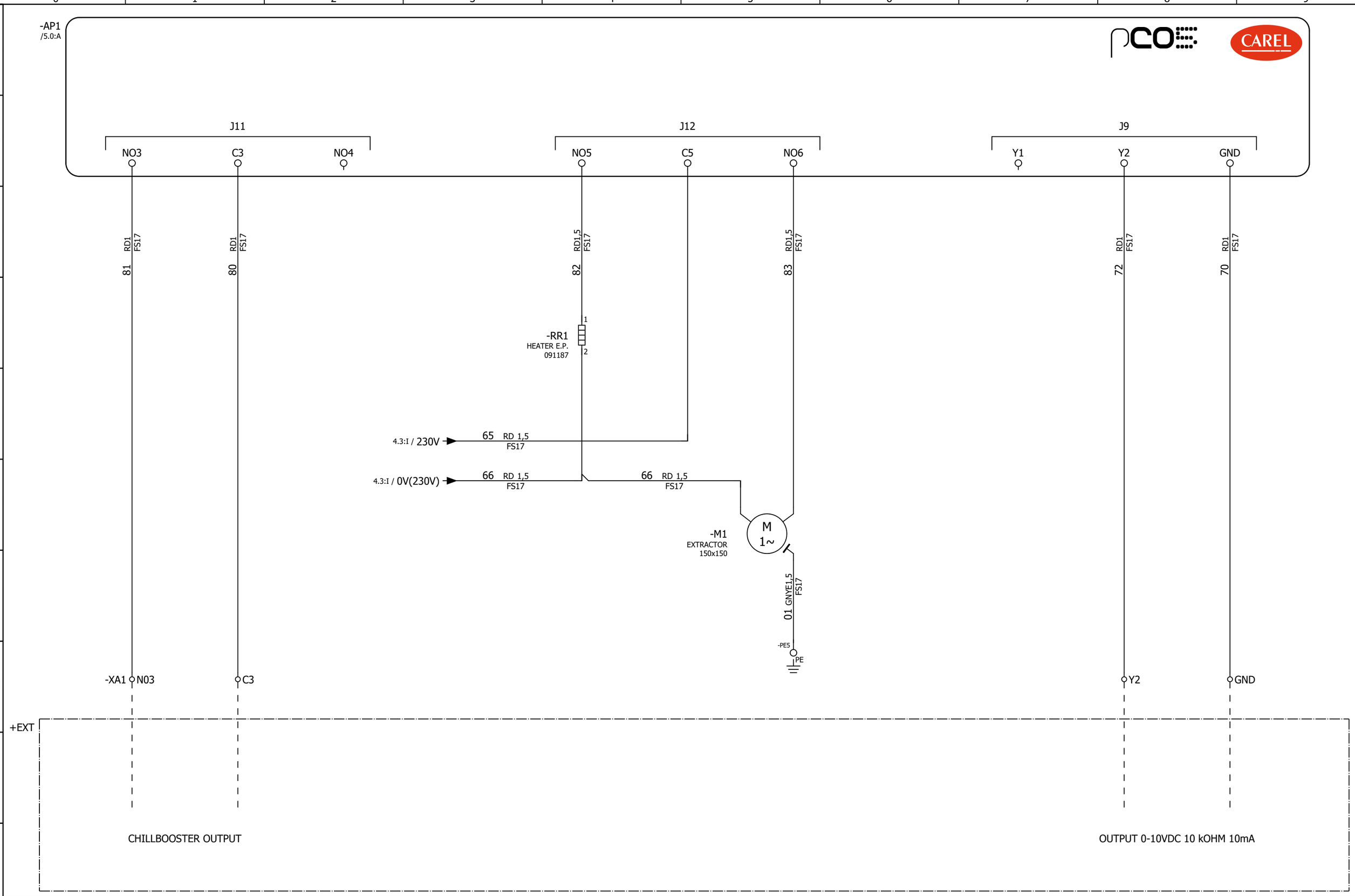

			Date	23/12/2015
			Elab.	Franco Meneghetti
Modification	Date	Name		

CM00009728

EP 4 FANS ALFA-LUVE

ALFA LU-VE

Auxiliary circuit

Mounting locations + QE

Function =

Page +QE/9

Next 11

Total pages 31

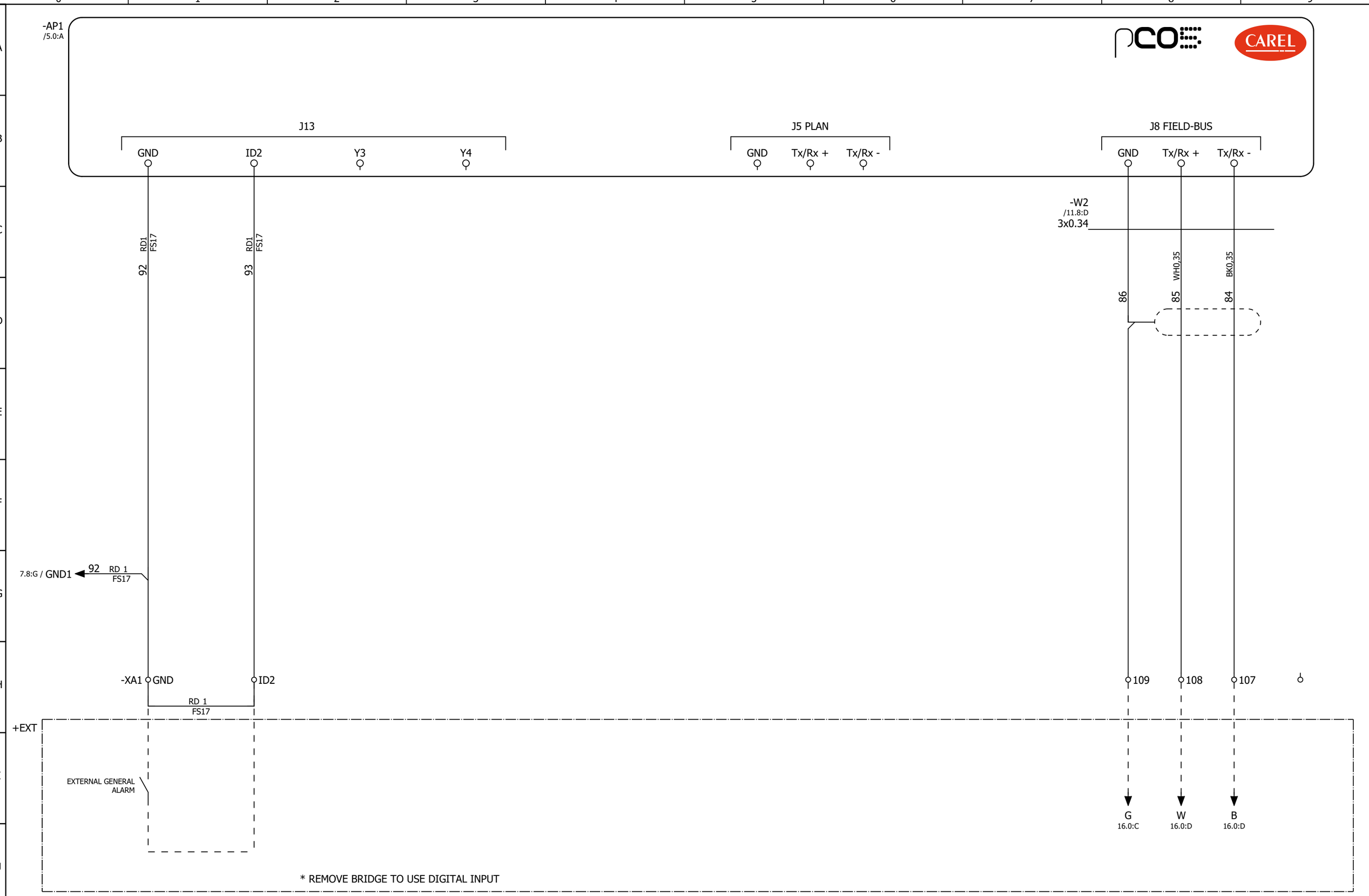

			Date	23/12/2015
			Elab.	Franco Meneghetti
Modification	Date	Name		

CM00009728

EP 4 FANS ALFA-LUVE

Auxiliary circuit

Mounting locations + QE

Function =

Page +QE/11

Next 13

Total pages 31

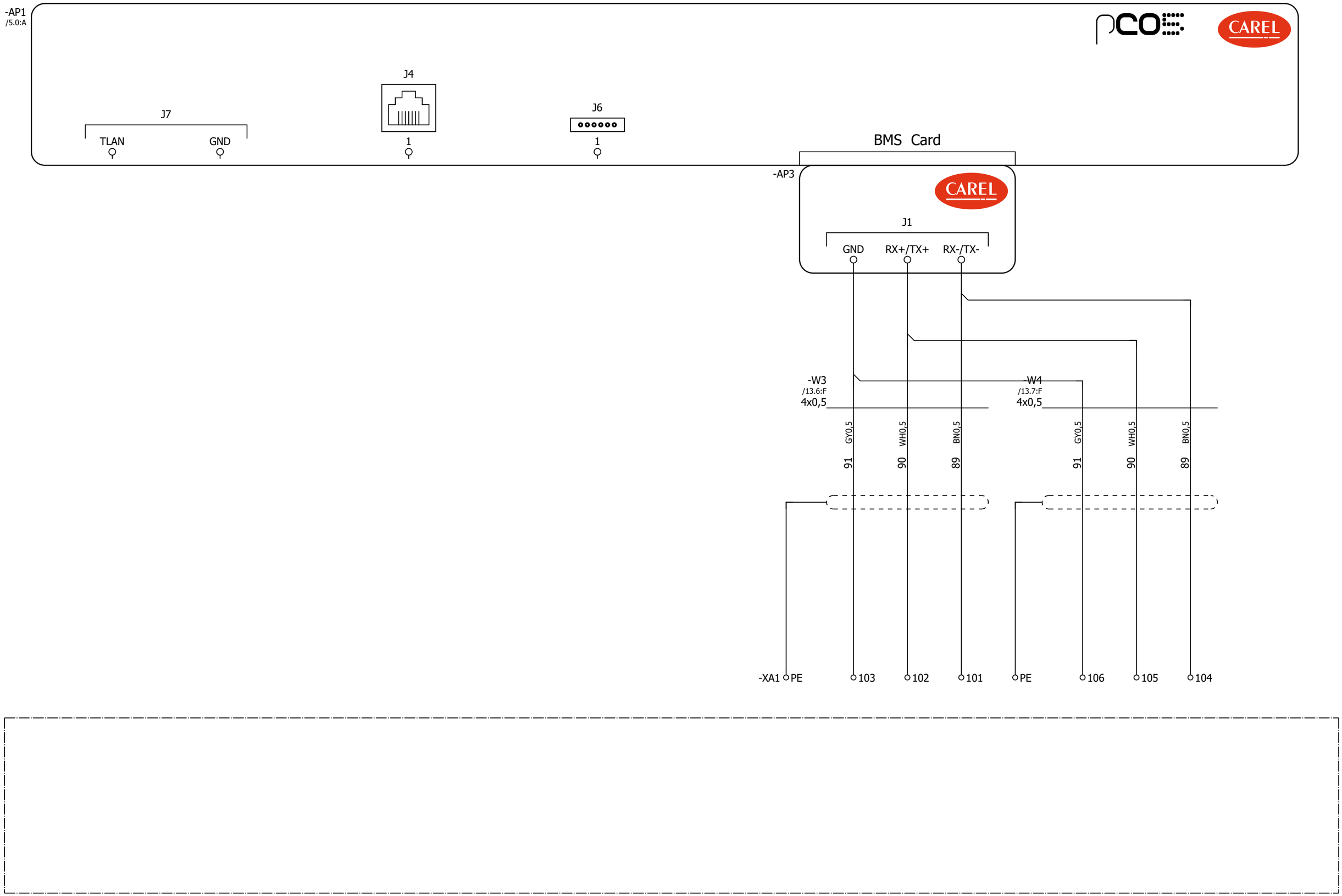

			Date	23/12/2015
			Elab.	Franco Meneghetti
Modification	Date	Name		

CM00009728

EP 4 FANS ALFA-LUVE

Auxiliary circuit

Mounting locations + QE

Function =

Page +QE/13

Next 15

Total pages 31

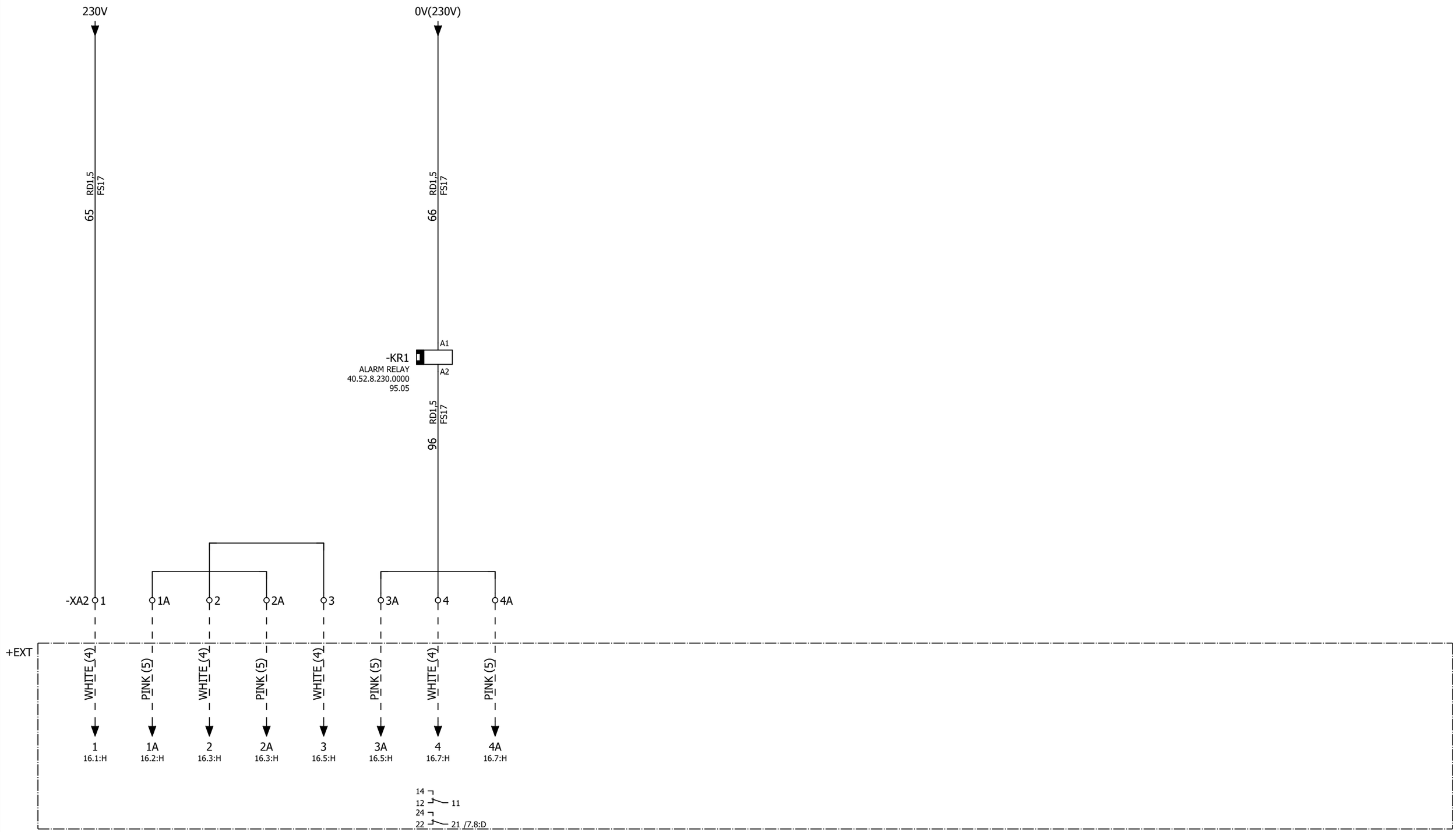

			Date	23/12/2015	CM00009728	ALFA LU-VE	Auxiliary circuit	Mounting locations + QE	Page +QE/15
			Elab.	Franco Meneghetti	EP 4 FANS ALFA-LUVE			Function =	Next 16
Modification	Date	Name							Total pages 31

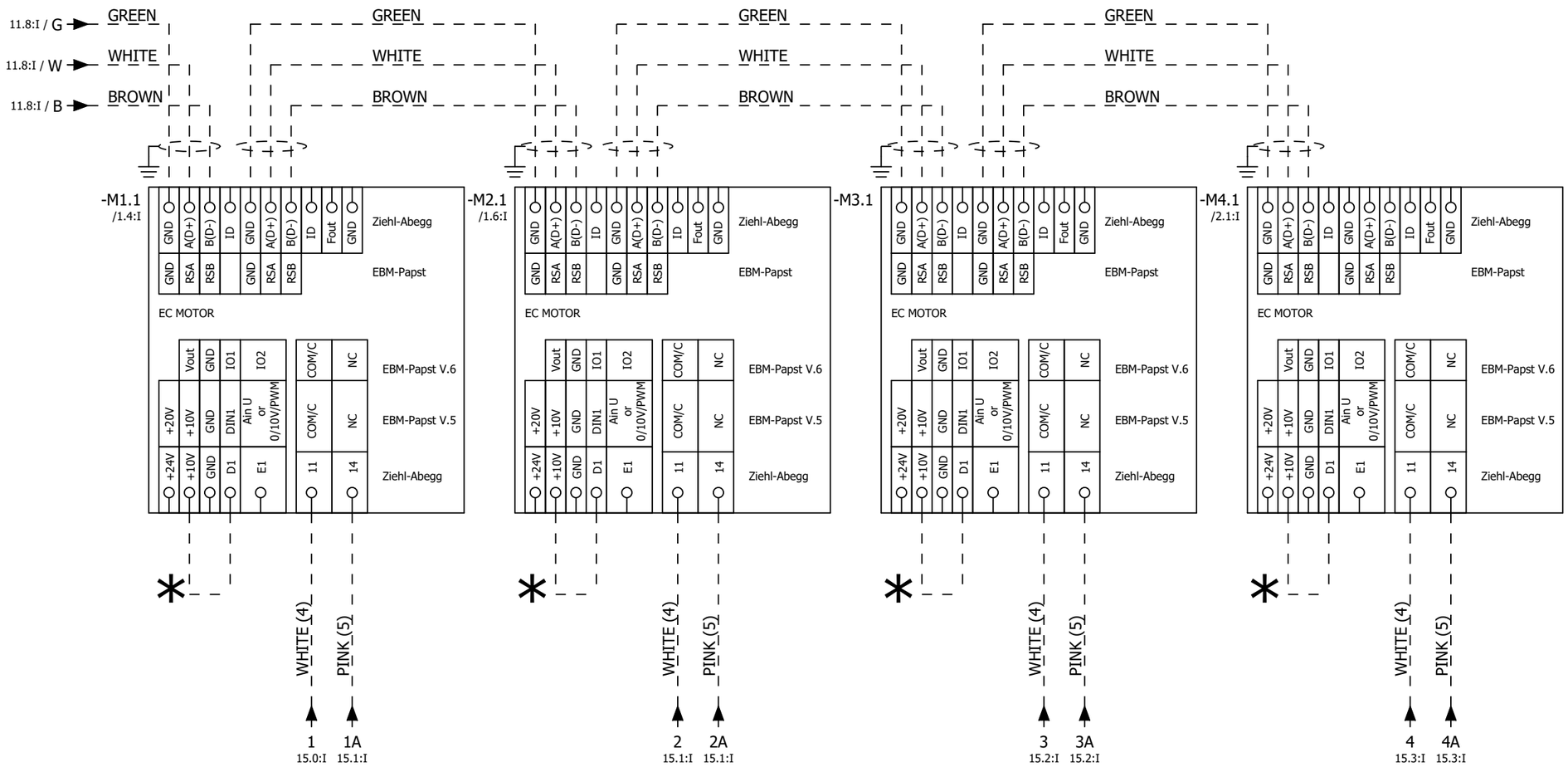

* CONNECTION NEEDED ONLY FOR ZIEHL-ABBEGG FANS

			Date	23/12/2015	CM00009728	ALFA LU-VE	Auxiliary circuit	Mounting locations + QE	Page +QE/16
			Elab.	Franco Meneghetti	EP 4 FANS ALFA-LUVE			Function =	Next 18
Modification	Date	Name							Total pages 31

4 FAN MOTORS

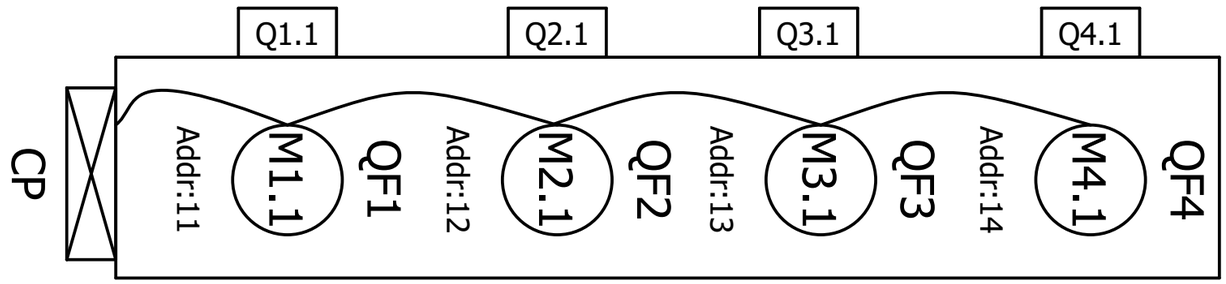

			Date	23/12/2015	CM00009728	ALFA LU-VE	Serial connection	Mounting locations + QE	Page +QE/18
			Elab.	Franco Meneghetti	EP 4 FANS ALFA-LUVE				Next 19
Modification	Date	Name						Function =	Total pages 31

CAREL INDUSTRIES S.p.A. - Società Unipersonale
Via dell'Industria, 11 - 35020 Brugine – Padova – Italia
Tel. (+39) 049.9716611 – Fax (+39) 049.9716600
www.carel.com – e-mail: carel@carel.com
Cap. Soc. € 10.000.000 i.v.
C.C.I.A.A. Padova Reg. Imp n. 4359090281
Part. IVA e Cod. Fisc. 04359090281
Società soggetta ad attività di direzione e coordinamento di Carel S.p.A.

CE

EU Declaration of Conformity

Manufacturer: **CAREL Industries S.p.A.**
Via dell'Industria, 11 35020 Brugine (PD) Italy

Electric Control Panels series Carel Power Solutions
Code :
Serial number:

CMAL0ME001 / CMAL0ME004

The manufacturer declares that all the above indicated products are in accordance with the EU Directives:

2006/95/EC (LVD)

and comply with the requirements of the following European standards:

EN 60204-1

Brugine, 27/06/2017

CAREL INDUSTRIES S.p.A.
Technical Director

Ing. Umberto Bianchini

Modification	Date	Name		Date	23/12/2015
				Elab.	Franco Meneghetti

CM00009728
EP 4 FANS ALFA-LUVE

ALFA LU-VE

Certificazione

Function	=	Mounting locations	+ QE
Total pages	31	Next	=REP1+/1,0
		Page	+QE/19

Multicore cables scheme

Cable type PROBE CABLE

Oracle code PROBE CABLE

Total Cable Length Cut:

Departure | Cross ref. | Terminator

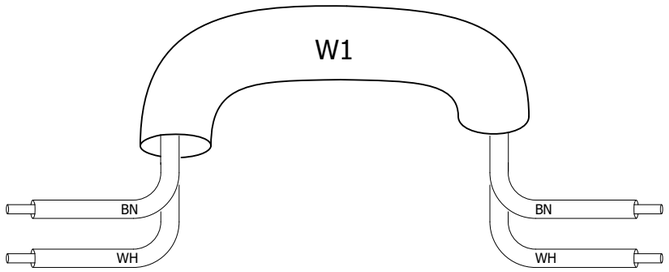

Terminator | Cross ref. | Arrival

Unsheathing cable departure

Unsheathing cable arrival

			Date	23/12/2015	CM00009728	Multicore cables scheme	Mounting locations +
			Elab.	Franco Meneghetti	EP 4 FANS ALFA-LUVE		Function =REP1
Modification	Date	Name					

ALFA LU-VE

Page	=REP1/1,0
Next	1,2
Total pages	31

Multicore cables scheme

Cable type Belden

Oracle code 1008176AXX

Total Cable Length Cut:

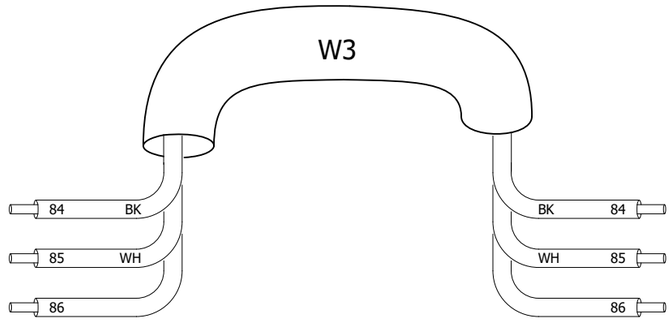

Departure	Cross ref.	Terminator	Terminator	Cross ref.	Arrival
XA1:107:A	+QE/11.8:H			+QE/11.8:B	+QE-AP1:J8 FIELD-BUS:Tx/Rx -
XA1:108:B	+QE/11.8:H			+QE/11.8:B	+QE-AP1:J8 FIELD-BUS:Tx/Rx +
XA1:109:A	+QE/11.8:H			+QE/11.8:B	+QE-AP1:J8 FIELD-BUS:GND

Unsheathing cable departure

Unsheathing cable arrival

			Date	23/12/2015
			Elab.	Franco Meneghetti
Modification	Date	Name		

CM00009728

EP 4 FANS ALFA-LUVE

ALFA LU-VE

Multicore cables scheme

Mounting locations +

Function =REP1

Page =REP1/1,2

Next 2,0

Total pages 31

Terminal diagram

Terminal strip

XA1

External targets				Teminal type	Terminal position on the drawings
101	89	Brown	0,5	STTB 2,5	+QE/13.7:H
102	90	Black	0,5		+QE/13.6:H
103	91	Gray	0,5	STTB 2,5	+QE/13.6:H
109	86		0.34	STTB 2,5	+QE/11.8:H
108	85	White	0,35		+QE/11.8:H
107	84	Black	0,35	STTB 2,5	+QE/11.8:H
					+QE/11.9:H
+VDC	77	Red	1	STTB 2,5	+QE/7.7:H
+5V	74	Red	1		+QE/7.7:H
+VDC				STTB 2,5	+QE/7.8:H
+5V					+QE/7.7:H
B3	71	Red	1	STTB 2,5	+QE/7.3:H
B1	68	Red	1		+QE/7.2:H
B5	94	Red	1	STTB 2,5	+QE/7.5:H
B4	73	Red	1		+QE/7.4:H
B6	95	Red	1	STTB 2,5	+QE/7.5:H
C1	75	Red	1		+QE/5.4:H
GND				STTB 2,5	+QE/7.2:H
C2	78	Red	1		+QE/5.8:H
GND				STTB 2,5	+QE/7.3:H
C3	80	Red	1		+QE/9.1:H
GND	92	Red	1	STTB 2,5	+QE/11.1:H
ID2	93	Red	1		+QE/11.1:H
GND	67	Red	1	STTB 2,5	+QE/7.4:H

Terminal diagram

Terminal strip

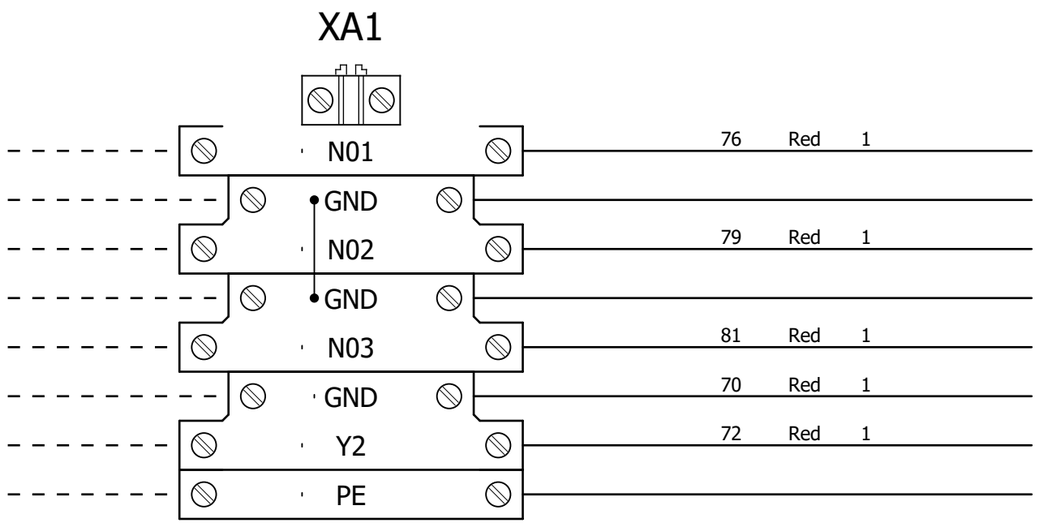

External targets	Teminal type	Terminal position on the drawings
		+QE/5.5:H
	STTB 2,5	+QE/7.5:H
		+QE/5.8:H
	STTB 2,5	+QE/7.6:H
		+QE/9.1:H
	STTB 2,5	+QE/9.8:H
		+QE/9.8:H
		+QE/13.5:H

Terminal diagram

Terminal strip

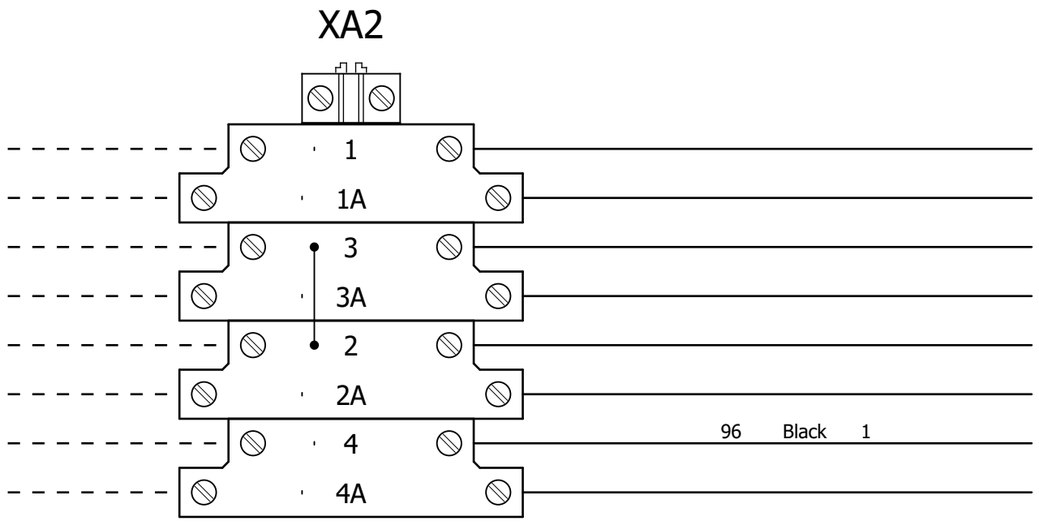

External targets	Teminal type	Terminal position on the drawings
	STTB 2,5	+QE/15.0:H
		+QE/15.1:H
	STTB 2,5	+QE/15.2:H
		+QE/15.2:H
	STTB 2,5	+QE/15.1:H
		+QE/15.1:H
	STTB 2,5	+QE/15.3:H
		+QE/15.3:H

BOM internal panel

InternoQE_F01_003

Short name	Designation	Function text	Position	Manufacturer	Component tipe	Oracle code
AP1	Programmable control		=+QE/5.0:A	CAREL	PCO Compact	PCOXLV0DB0
AP2	Damping magnet, M 5.0	FERRITE 2 SPIRE	=+QE/5.1:D	KE-KITAGAWA	FERRITE CORE	0907877AXX
AP3	Scheda seriale BMS		=+QE/13.6:B	CAREL	Scheda seriale BMS	PCOS004850
E1	Earth terminal	GROUND BAR	=+QE/1.2:D	SCHNEIDER ELECTRIC	14977	2217096CEL
HL1	White lamp 24Vac	POWER ON	=+QE/5.1:F	EATON ELECTRIC	M22-LED-W	0505103CEL
HL1	Plate	=	=+QE/5.1:F	CEMBRE	15X27	1800243AXX
HL1	Support plate	=	=+QE/5.1:F	CEMBRE	D22 17X30	1800242AXX
HL1	Glass plate	=	=+QE/5.1:F	CEMBRE	15X27	1800244AXX
HL1	Support	=	=+QE/5.1:F	EATON ELECTRIC	M22-A	0505184AXX
HL1	White indicator plate	=	=+QE/5.1:F	EATON ELECTRIC	216771	0505111CEL
KR1	Relay	ALARM RELAY	=+QE/15.3:E	FINDER	40.52.8.230.0000	0100751CEL
KR1	Base element	=	=+QE/15.3:E	FINDER	95.05	5931384AXX
M1	Internal fan	EXTRACTOR	=+QE/9.5:F	EZM	150x150	1312697AXX
PE	GROUND		=+QE/1.1:H		PE	PE
PE2	GROUND		=+QE/1.2:H		PE	PE
PE3	GROUND		=+QE/1.3:H		PE	PE
PE4	GROUND		=+QE/4.4:H		PE	PE
PE5	GROUND		=+QE/9.5:G		PE	PE
QF1	Power circuit breaker	PROTECTION 1	=+QE/1.4:C	EATON ELECTRIC	FAZ6-C10/3	0403856CEL
QF2	Power circuit breaker	PROTECTION 2	=+QE/1.6:C	EATON ELECTRIC	FAZ6-C10/3	0403856CEL
QF3	Power circuit breaker	PROTECTION 3	=+QE/1.8:C	EATON ELECTRIC	FAZ6-C10/3	0403856CEL
QF4	Power circuit breaker	PROTECTION 4	=+QE/2.1:C	EATON ELECTRIC	FAZ6-C10/3	0403856CEL
QF21	Power circuit breaker	TRANSFORMER PROTECTION	=+QE/4.2:B	EATON ELECTRIC	FAZ6-C4/2	0403468AXX

BOM internal panel

InternoQE_F01_003

Short name	Designation	Function text	Position	Manufacturer	Component tipe	Oracle code
QF22	Power circuit breaker	SECONDARY PROTECTION 24V	=+QE/4.2:G	EATON ELECTRIC	FAZ6-C4/1	0403824AXX
QF23	Power circuit breaker	230V SECONDARY PROTECTION	=+QE/4.3:G	EATON ELECTRIC	FAZ6-C2/1	0403819AXX
QS1	Disconnect switch	MAIN SWITCH	=+QE/1.1:E	SOCOMEC	Sirco M80	0402331AXX
QS1	Operation	=	=+QE/1.1:E	SOCOMEC	Y/R 16-80A	0402333AXX
RR1	Scaldiglia 200W 230V	HEATER E.P.	=+QE/9.4:D	EZM	091187	5729759AXX
ST1	SENSOR NTC WH IP68 -50T105 CABLE 1,5M	CABINET TEMPERATURE	=+QE/7.3:E	CAREL	NTC015WH01	NTC015WH01
TC1	TRANSFORMER	TRANSFORMER	=+QE/4.2:D		400V-230V 310VA//24V 60AV - 230V 250VA	0910244AXX

BOM external panel

EsternoQE_F01_003

Place	Short name	Function text	Position	Technical characteristics
+EXT	M1.1	Fan	=+QE/1.4:I	
+EXT	M1.2	=	=+QE/1.8:I	
+EXT	M2.1	=	=+QE/1.6:I	
+EXT	M4.1	=	=+QE/2.1:I	
+EXT	ST1	SIGNAL FOR FANS	=+QE/7.2:I	
+EXT	ST2	EXTERNAL AIR TEMP	=+QE/7.3:I	
+EXT	ST3	SIGNAL FOR FANS REGULATOR	=+QE/7.4:I	

alfa.luvegroup.com

Product code	CM00009729	Rev	5
Project description	EP 6 FANS ALFA-LUVE		

Supply voltage	3P+N+E - 400V - 50Hz	Operating temperature	40°C
Rated current	39A Icc 6KA		
Auxiliary voltage	24Vac/230Vac		

Designed by	Franco Menenghetti	on	23/12/2015
Checked by	Franco Meneghetti	on	11/07/2016
Approved by	Luca Tessaro	on	11/07/2016

NOT ALLOWED DELIVER TO THIRD PARTIES OR REPRODUCE THIS DOCUMENT NOT USE THE CONTENT OR OTHERWISE MAKE KNOWN TO THIRD PARTIES WITHOUT OUR EXPRESS PERMISSION. ANY INFRINGEMENT WILL RESULT IN DAMAGES SUFFERED. And it MADE SUBJECT TO ALL RIGHTS UNDER PATENTS OR MODELS

Cables Range

Cross-sect	N07V-K Range (A)	N07G9 Range (A)
0,5	\	NOT AVAILABLE
0,75	\	NOT AVAILABLE
1	8A	12A
1,5	11A	16A
2,5	15A	22.4A
4	20A	29.6A
6	26A	38.4A
10	36A	52.8A
16	48A	70.4A
25	64A	93.6A
35	80A	115.2A
50	95A	140A
95	150A	177.6A
120	170A	215.2A
150	195A	NOT AVAILABLE
185	220A	NOT AVAILABLE
240	260A	NOT AVAILABLE
300	300A	NOT AVAILABLE

Colors Table

Colors	Short name
Red	RD
Black	BK
Yellow	YE
Yellow\Green	GNYE
Orange	OG
Light blue	TQ
Blue	BU
Pink	PK
White	WH
Gray	GY
Brown	BN
Green	GN
Purple	VT
\	
\	
\	
\	

REVIEW TABLE

Rev.	Technical name	Date	Note
01	Meneghetti F.	08/02/2016	- -
02	Meneghetti F.	11/07/2016	- -
03	Meneghetti F.	22/06/2017	- -
04	Quaggia L.	08/11/2018	- -
05	Quaggia L.	10/09/2019	- -

Table of contents

F06_003

Page	Page type	Page description	Date	Edited by
/1	Title page / cover sheet	Title page	31/01/2020	Luca Quaggia
/2	Pre-planning	Technical information	31/01/2020	Luca Quaggia
/3	Table of contents	Table of contents	31/01/2020	Luca Quaggia
/4	Model view	General view	31/01/2020	Luca Quaggia
/5	Model view	View of all sides	31/01/2020	Luca Quaggia
/6	Model view	Mounting plate view	31/01/2020	Luca Quaggia
/7	Model view	Door view	31/01/2020	Luca Quaggia
/8	Model view	Guides view	31/01/2020	Luca Quaggia
/9	Model view	Channels view	31/01/2020	Luca Quaggia
/10	Model view	Bottom view	31/01/2020	Luca Quaggia
+QE/1	Schematic multi-line	Power circuit	31/01/2020	Luca Quaggia
+QE/2	Schematic multi-line	Power circuit	31/01/2020	Luca Quaggia
+QE/3	Schematic multi-line	Power circuit	31/01/2020	Luca Quaggia
+QE/4	Schematic multi-line	Auxiliary circuit	31/01/2020	Luca Quaggia
+QE/5	Schematic multi-line	Auxiliary circuit	31/01/2020	Luca Quaggia
+QE/5.a	Schematic multi-line	Auxiliary circuit	31/01/2020	Luca Quaggia
+QE/6	Schematic multi-line	Auxiliary circuit	31/01/2020	Luca Quaggia
+QE/7	Schematic multi-line	Auxiliary circuit	31/01/2020	Luca Quaggia
+QE/8	Schematic multi-line	Auxiliary circuit	31/01/2020	Luca Quaggia
+QE/9	Schematic multi-line	Auxiliary circuit	31/01/2020	Luca Quaggia
+QE/10	Schematic multi-line	Auxiliary circuit	31/01/2020	Luca Quaggia
+QE/11	Schematic multi-line	Auxiliary circuit	31/01/2020	Luca Quaggia
+QE/12	Graphic	Serial connection	31/01/2020	Luca Quaggia
+QE/13	Graphic	Serial connection	31/01/2020	Luca Quaggia
=REP1/1,0	Cable diagram	Multicore cables scheme	31/01/2020	Luca Quaggia
=REP1/1,1	Cable diagram	Multicore cables scheme	31/01/2020	Luca Quaggia
=REP1/1,2	Cable diagram	Multicore cables scheme	31/01/2020	Luca Quaggia
=REP1/1,3	Cable diagram	Multicore cables scheme	31/01/2020	Luca Quaggia
=REP1/2,0	Terminal diagram	Terminal strip	31/01/2020	Luca Quaggia
=REP1/2,0.a	Terminal diagram	Terminal strip	31/01/2020	Luca Quaggia
=REP1/2,1	Terminal diagram	Terminal strip	31/01/2020	Luca Quaggia
=REP1/3,0	Parts list	BOM internal panel	31/01/2020	Luca Quaggia
=REP1/3,0.a	Parts list	BOM internal panel	31/01/2020	Luca Quaggia
=REP1/4,0	Parts list	BOM external panel	31/01/2020	Luca Quaggia

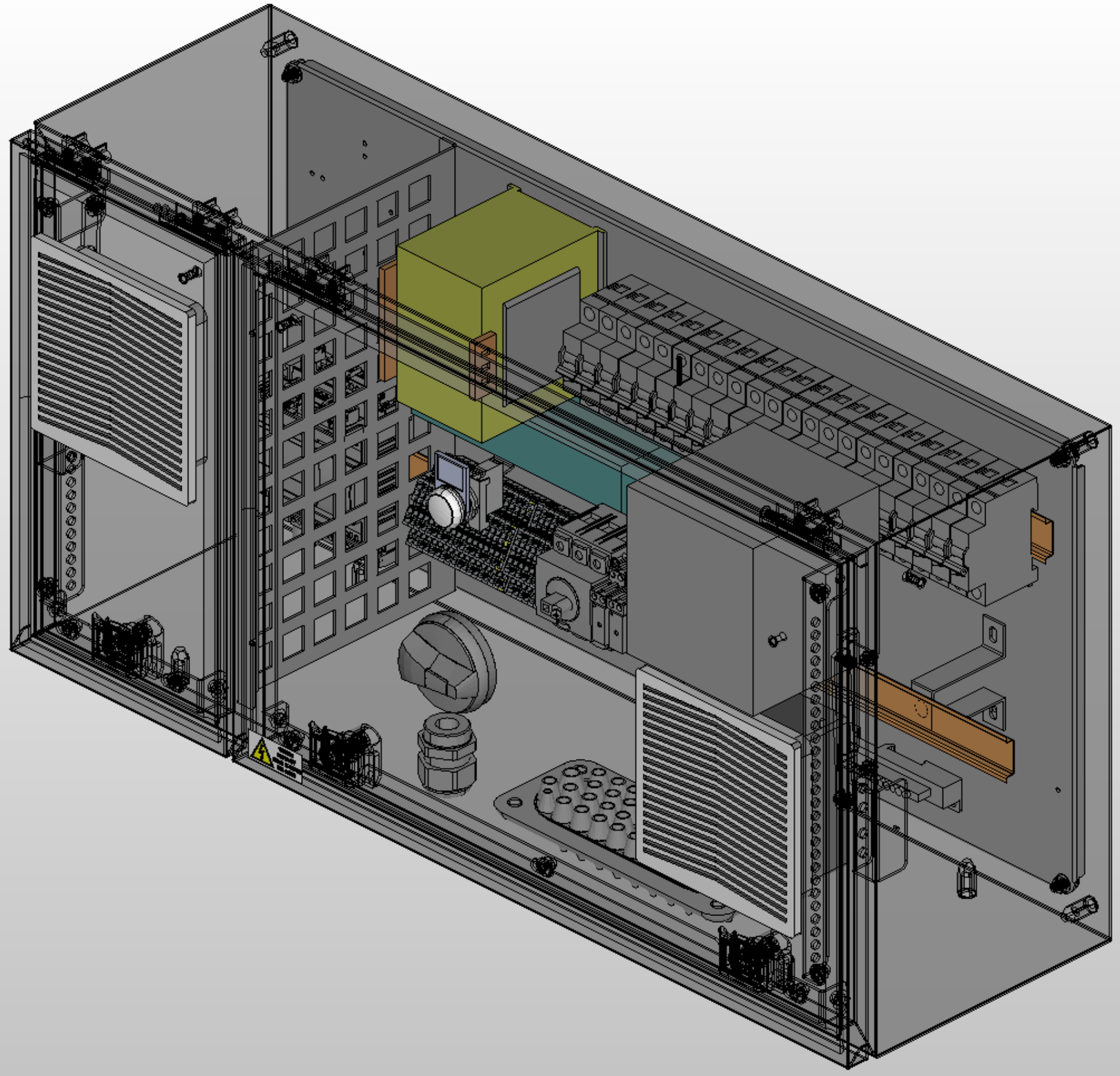

			Date	23/12/2015	CM00009729	ALFA LU-VE	General view	Mounting locations +	Page /4
			Elab.	Franco Menenghetti	EP 6 FANS ALFA-LUVE			Function =	Next 5
									Total pages 34
Modification	Date	Name							

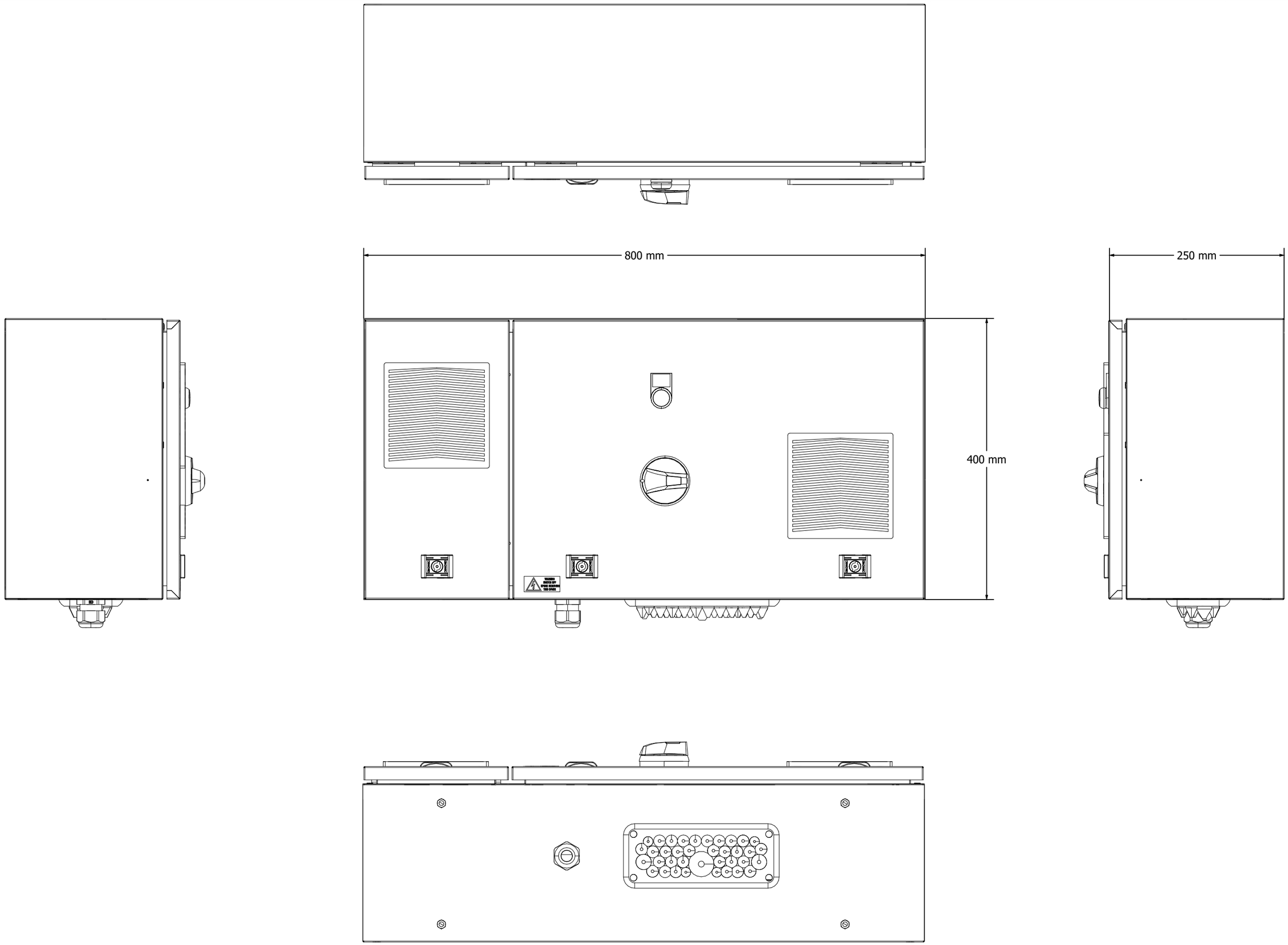

			Date	23/12/2015	CM00009729	ALFA LU-VE	View of all sides	Mounting locations +	Page /5
			Elab.	Franco Menenghetti	EP 6 FANS ALFA-LUVE				Next 6
Modification	Date	Name						Function =	Total pages 34

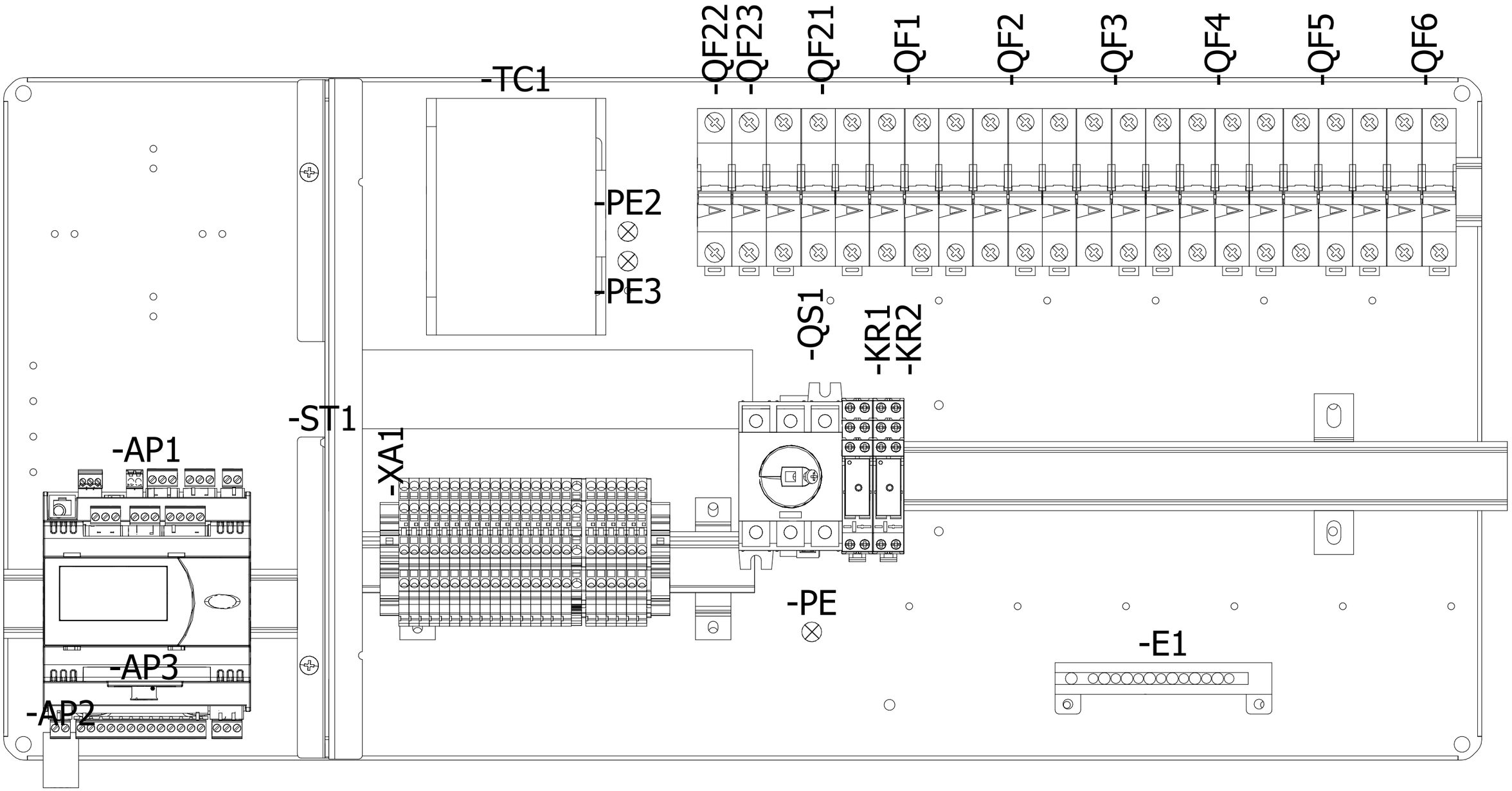

			Date	23/12/2015	CM00009729	ALFA LU-VE	Mounting plate view	Mounting locations +	Page /6
			Elab.	Franco Menenghetti	EP 6 FANS ALFA-LUVE				Next 7
								Function =	Total pages 34
Modification	Date	Name							

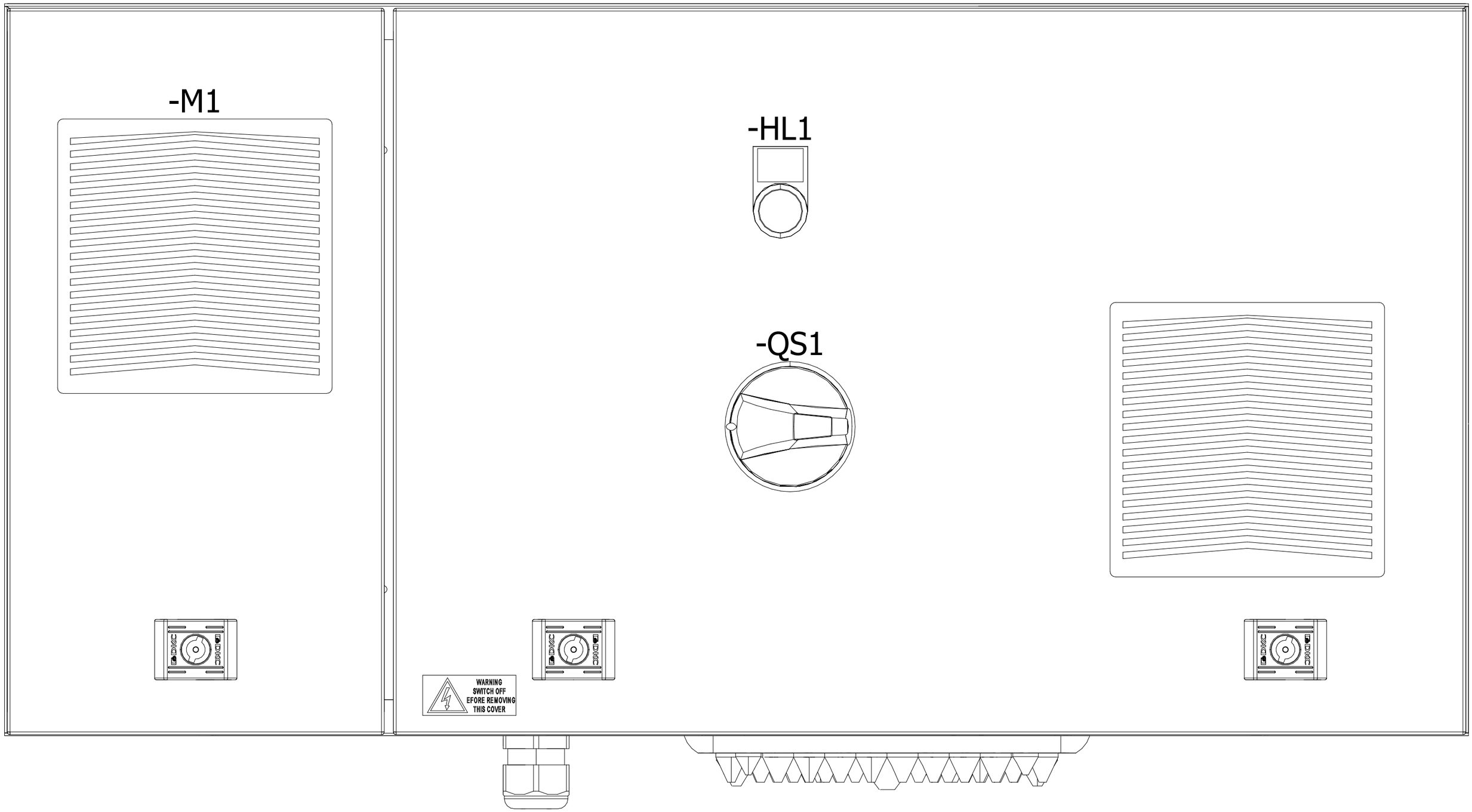

			Date	23/12/2015	CM00009729	ALFA LU-VE	Door view	Mounting locations +	Page /7
			Elab.	Franco Menenghetti	EP 6 FANS ALFA-LUVE			Function =	Next 8
Modification	Date	Name							Total pages 34

Layout guides and channels

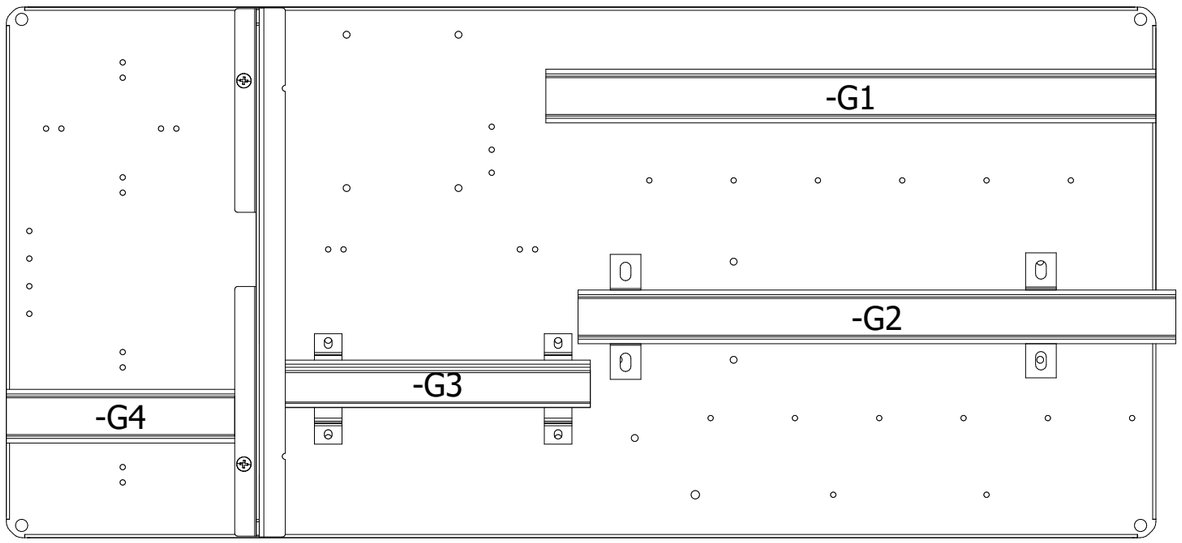

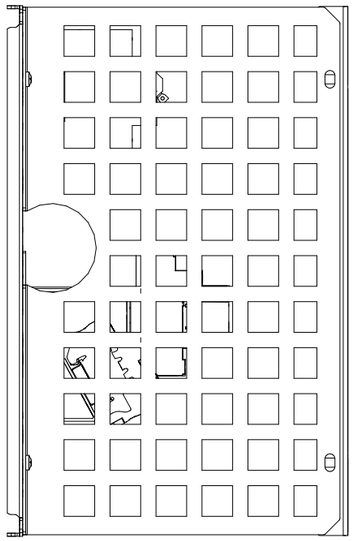

Sign	Type	Length (Tollerance -5mm)
U6	Inclined Bracket	
U7	Inclined Bracket	

G1	35x7.5	400 mm
G2	35x7.5	390 mm
G3	35x7.5	200 mm
G4	35x7.5	150 mm

U5	Support H=70mm	
U4	Support H=70mm	

U1	2cm Rise	
U2	2cm Rise	
U3	2cm Rise	

Empty

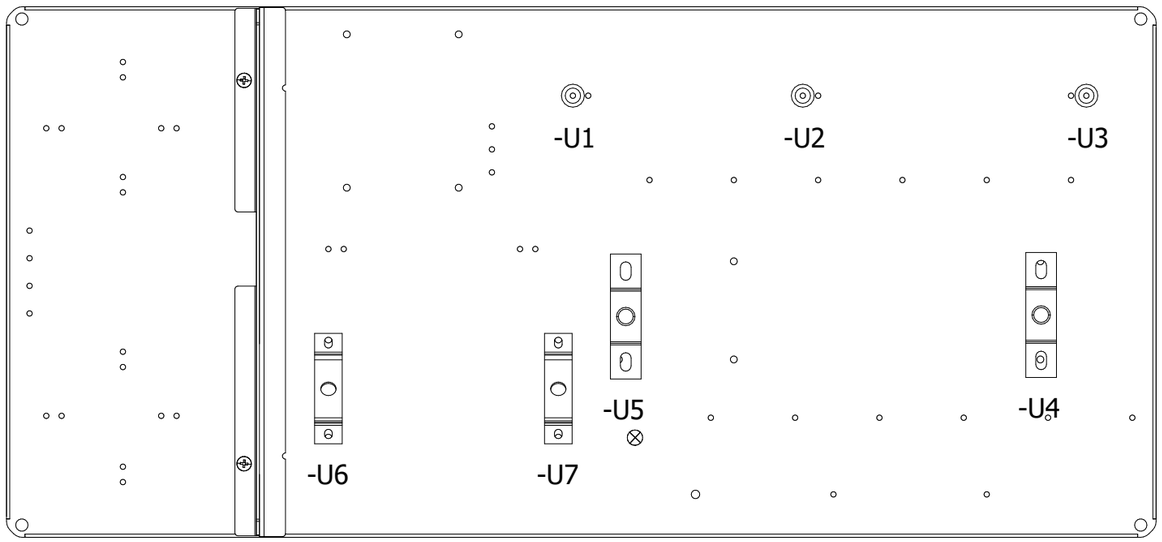

Empty

			Date	23/12/2015	CM00009729	ALFA LU-VE	Guides view	Mounting locations +	Page /8
			Elab.	Franco Menenghetti	EP 6 FANS ALFA-LUVE				Next 9
								Function =	Total pages 34
Modification	Date	Name							

Layout guides and channels

Sign	Type	Length (Tollerance -5mm)
C1	40x60	205 mm

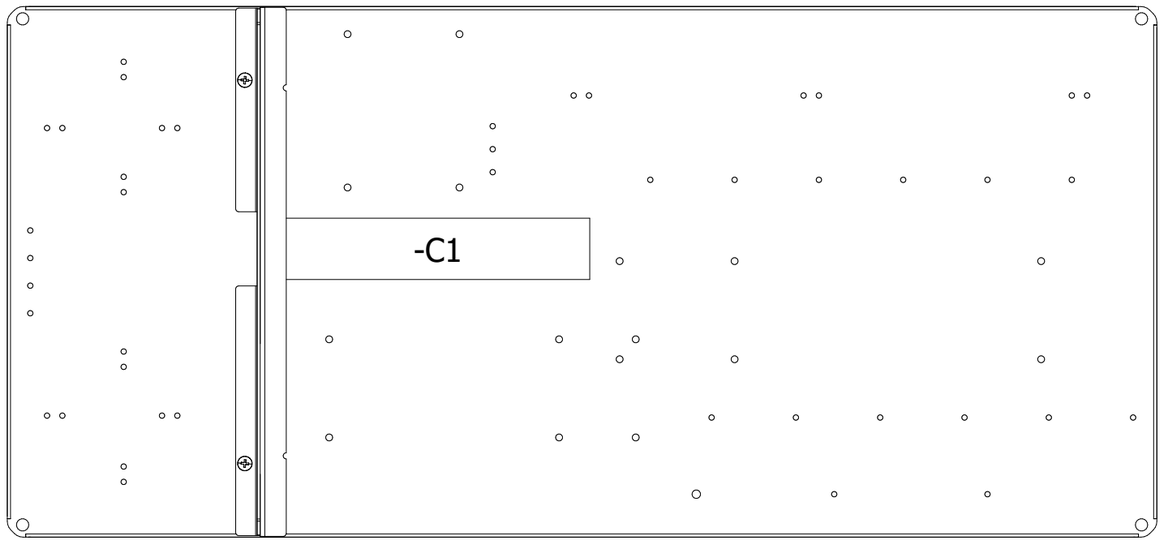

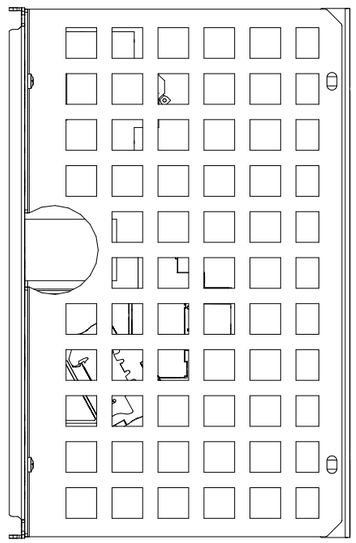

			Date	23/12/2015
			Elab.	Franco Menenghetti
Modification	Date	Name		

CM00009729

EP 6 FANS ALFA-LUVE

ALFA LU-VE

Channels view

Mounting locations +

Function =

Page /9

Next 10

Total pages 34

Cable entry/exit components

Item number	Component tipe	Drilling (Tollerance +-0.5mm)
1	M32 Gland	Ø 32.5mm
2	Multi-cable gland	

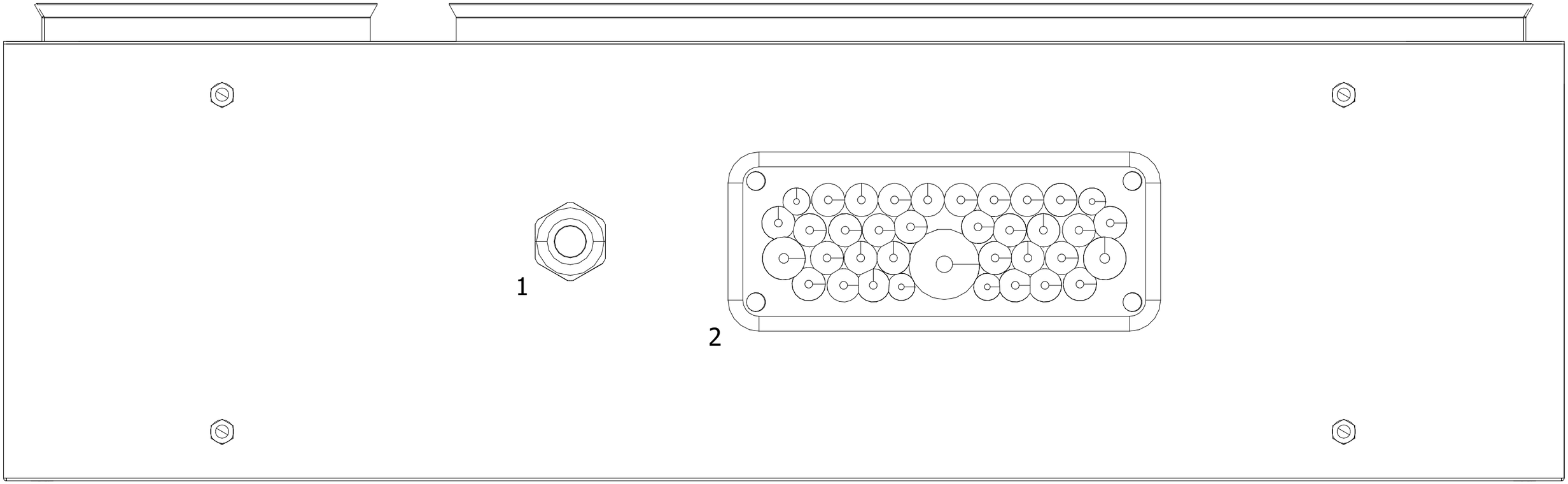

			Date	23/12/2015	CM00009729	ALFA LU-VE	Bottom view	Mounting locations +	Page /10
			Elab.	Franco Menenghetti	EP 6 FANS ALFA-LUVE				Next +QE/1
								Function =	Total pages 34
Modification	Date	Name							

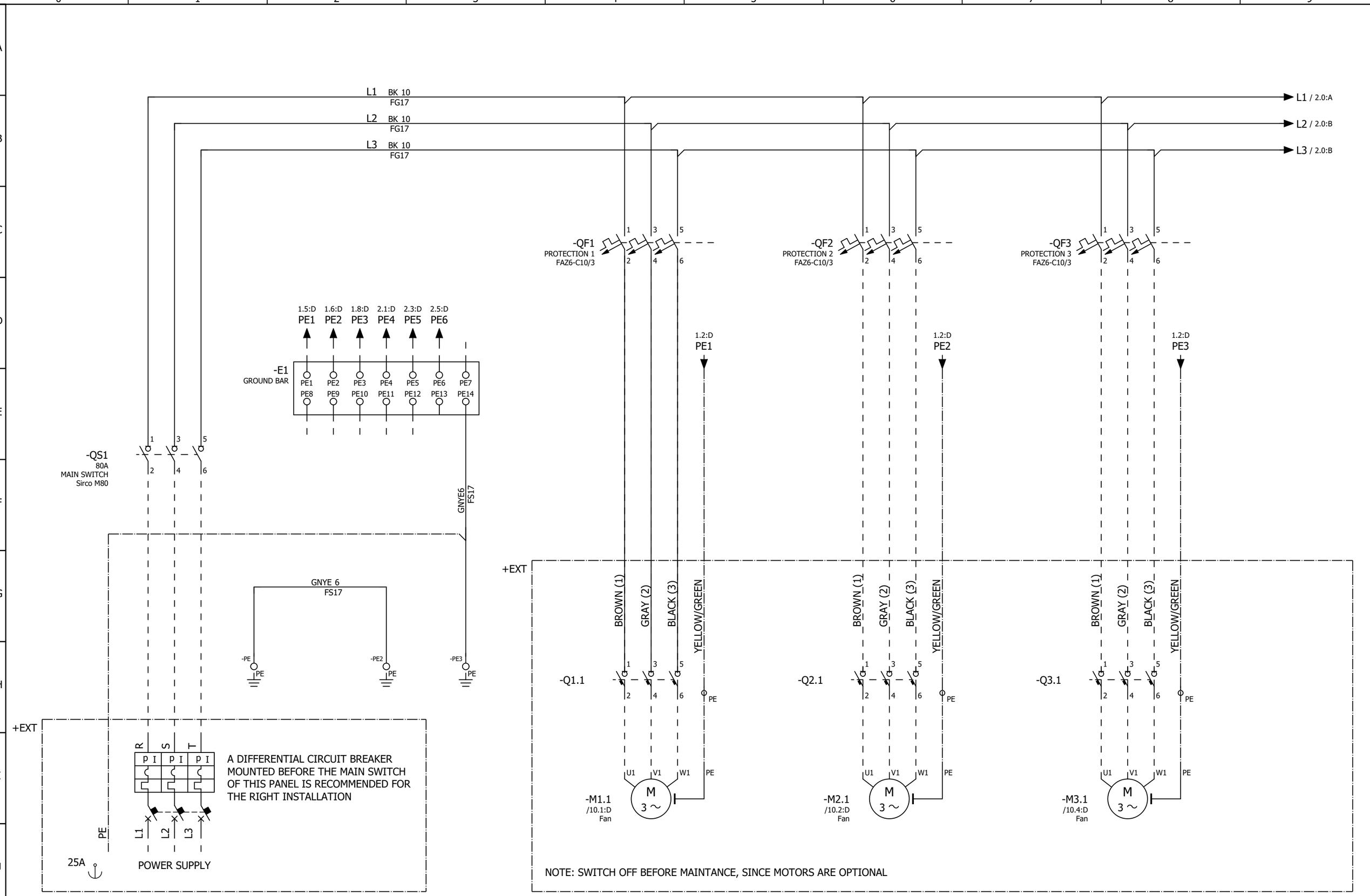

			Date	23/12/2015
			Elab.	Franco Menenghetti
Modification	Date	Name		

CM00009729

EP 6 FANS ALFA-LUVE

ALFA LU-VE

Power circuit

Mounting locations + QE

Function =

Page +QE/1

Next 2

Total pages 34

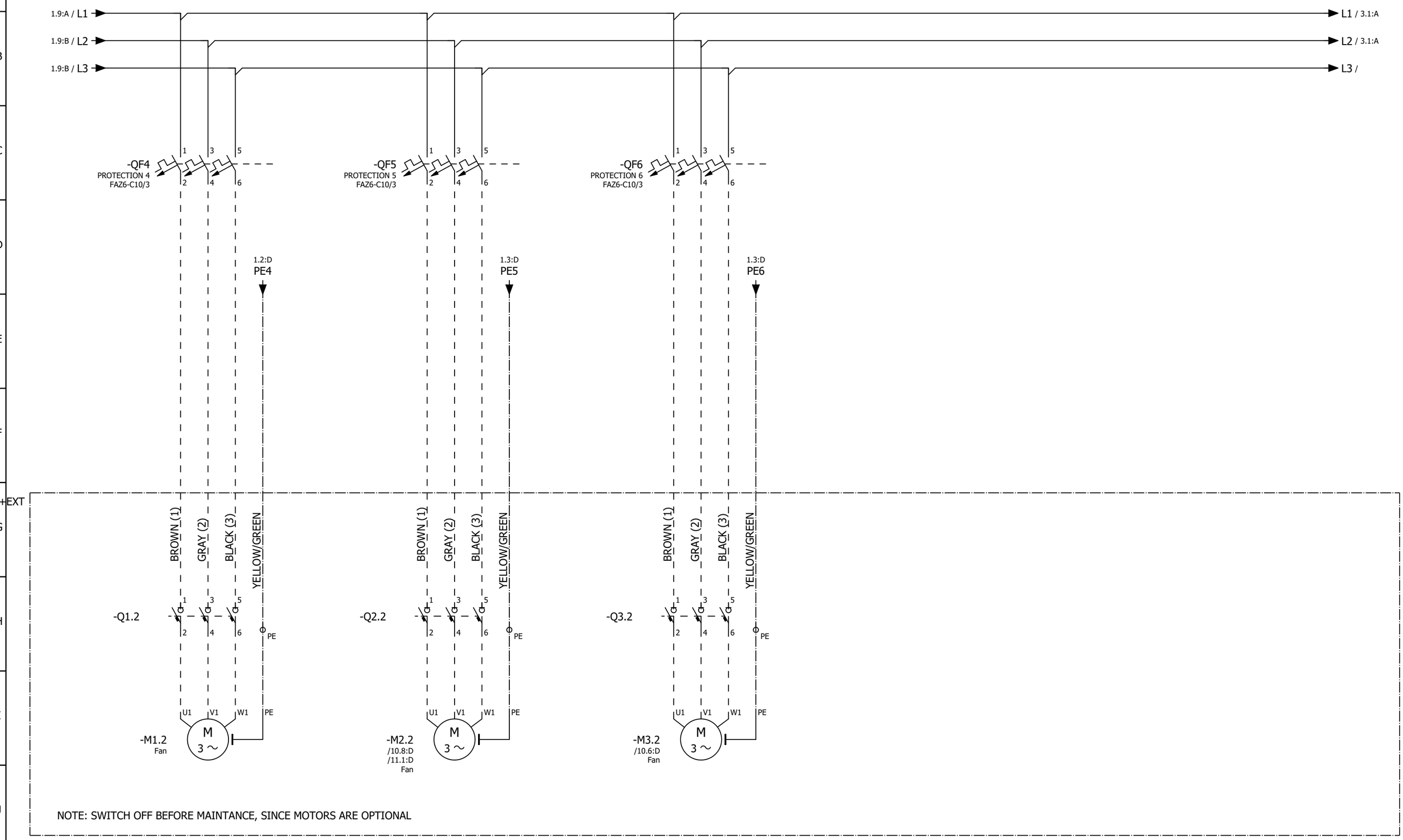

			Date	23/12/2015	CM00009729	ALFA LU-VE	Power circuit	Mounting locations + QE	Page +QE/2
			Elab.	Franco Menenghetti	EP 6 FANS ALFA-LUVE				Next 3
Modification	Date	Name						Function =	Total pages 34

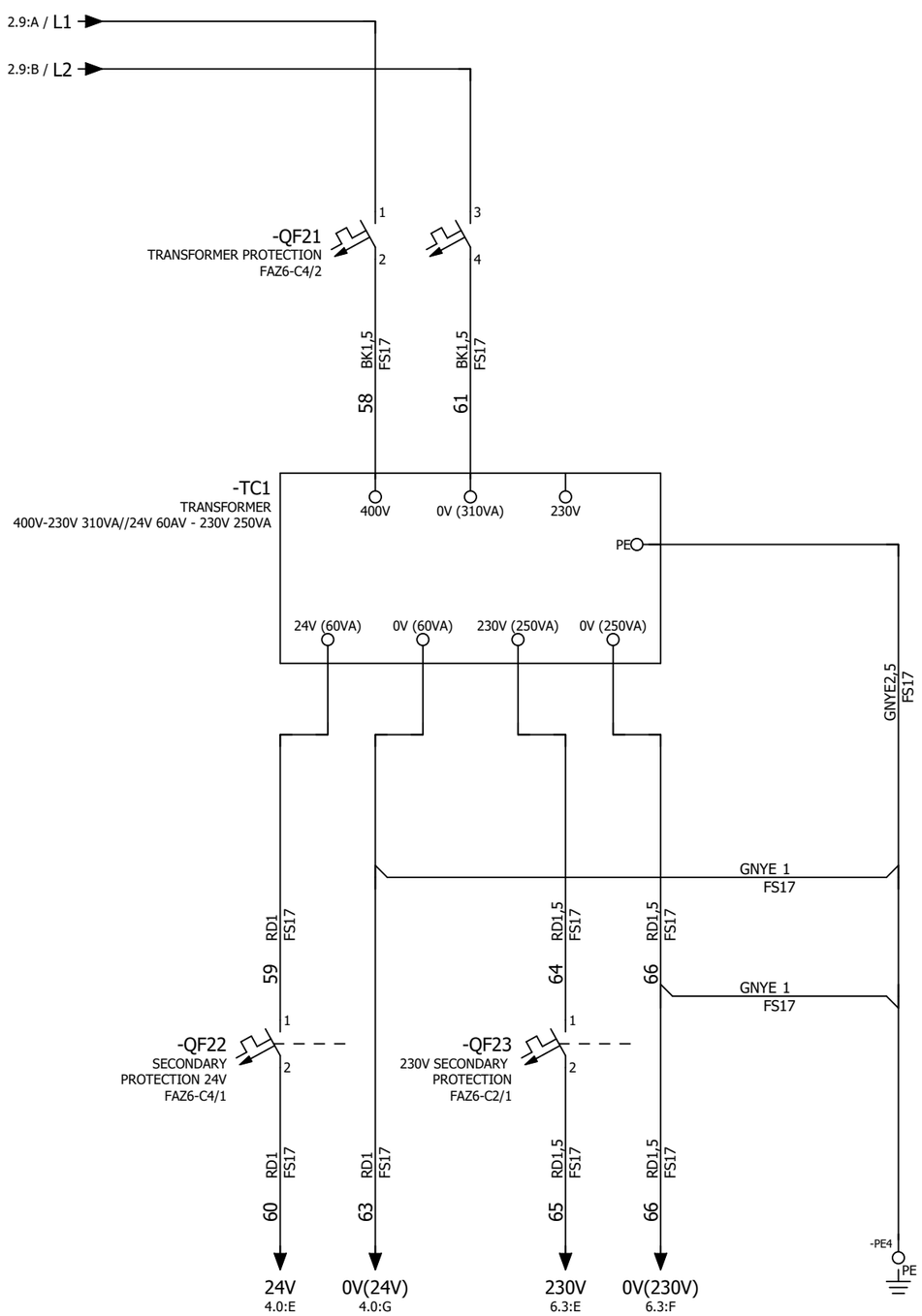

			Date	23/12/2015	CM00009729	ALFA LU-VE	Power circuit	Mounting locations + QE	Page +QE/3
			Elab.	Franco Menenghetti	EP 6 FANS ALFA-LUVE			Function =	Next 4
Modification	Date	Name							Total pages 34

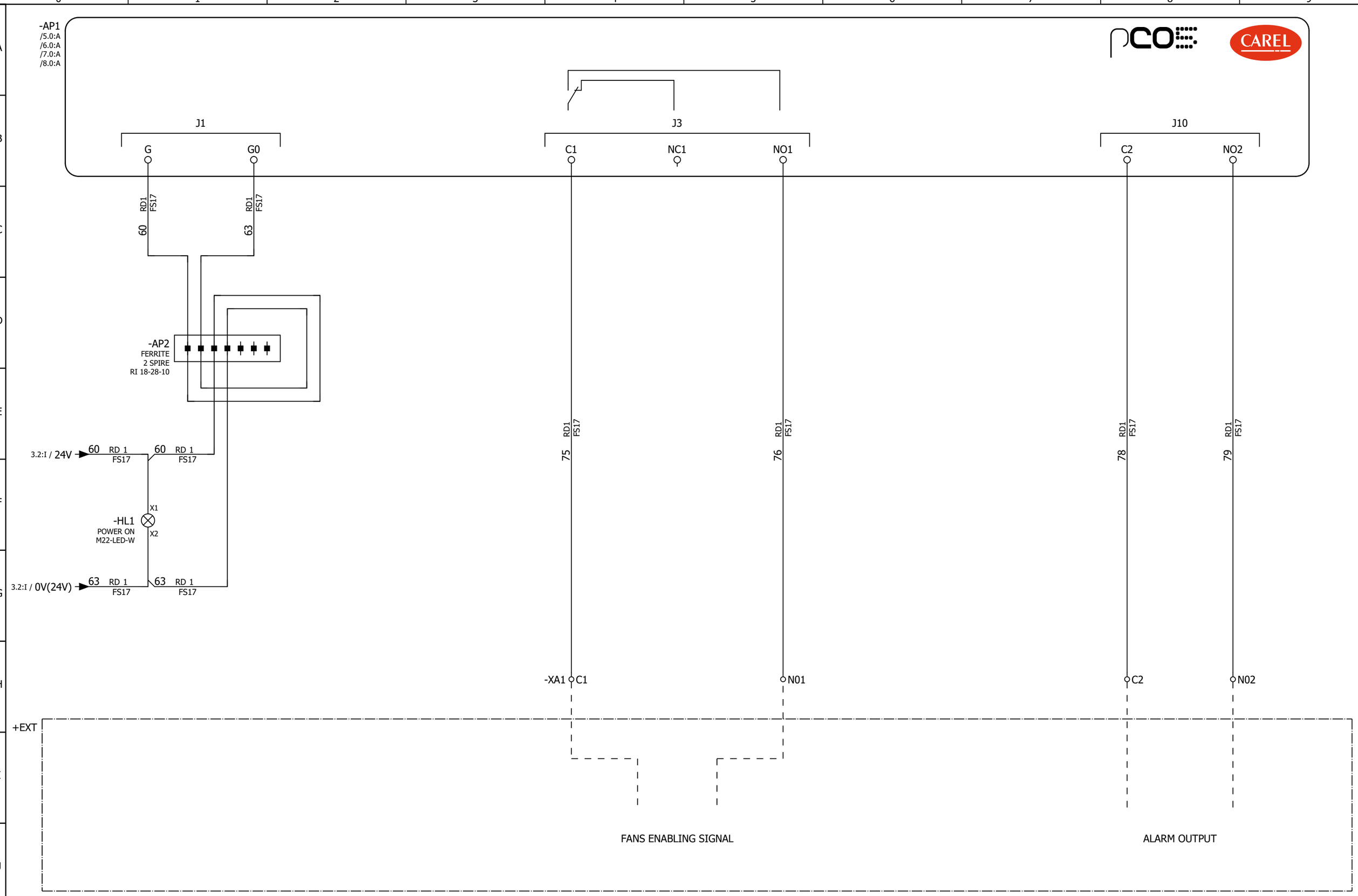

			Date	23/12/2015
			Elab.	Franco Menenghetti
Modification	Date	Name		

CM00009729

EP 6 FANS ALFA-LUVE

Auxiliary circuit

Mounting locations + QE

Function =

Page +QE/4

Next 5

Total pages 34

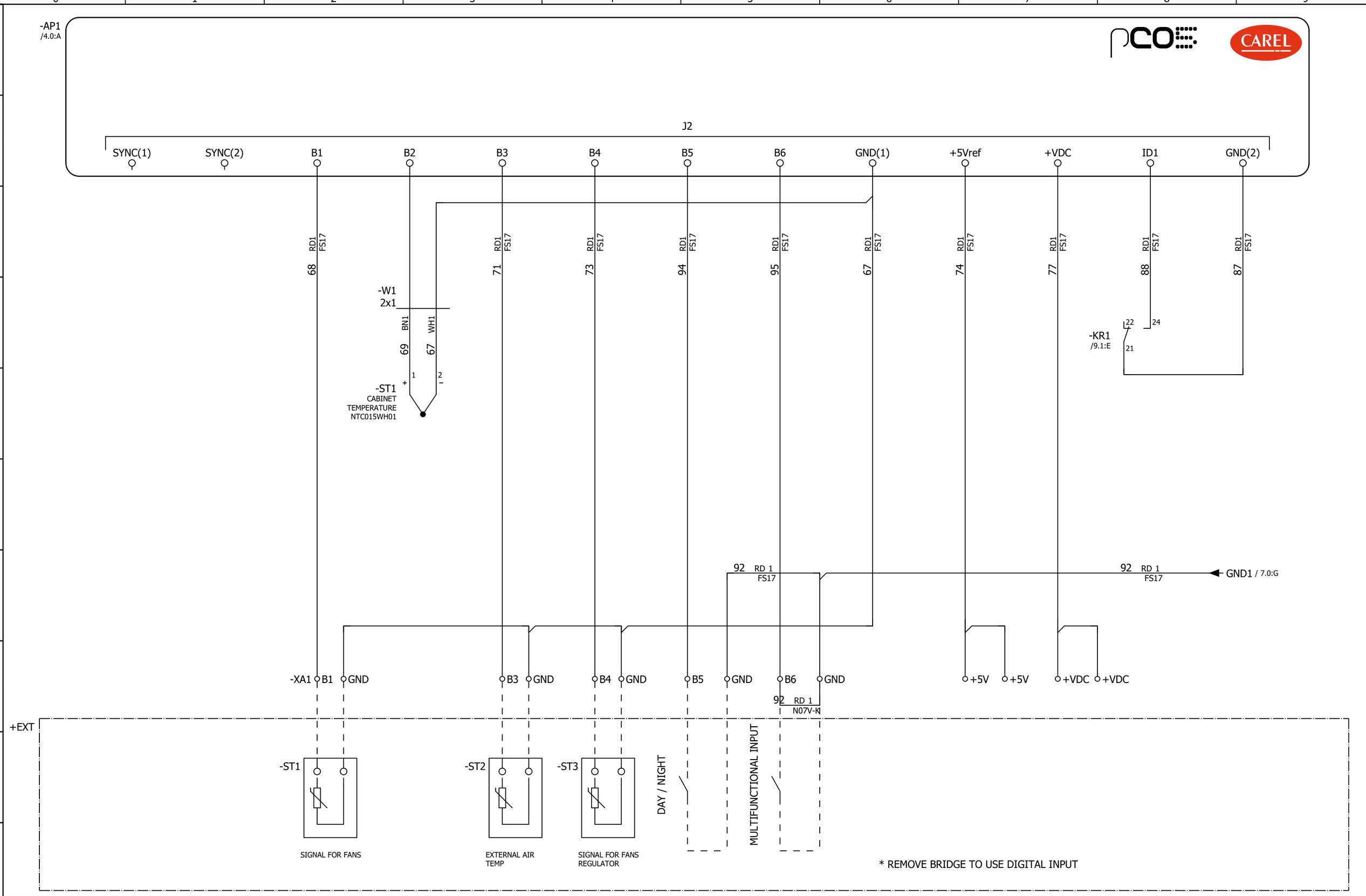

			Date	23/12/2015
			Elab.	Franco Menenghetti
Modification	Date	Name		

CM00009729

EP 6 FANS ALFA-LUVE

Auxiliary circuit

Mounting locations + QE

Function =

Page +QE/5

Next 5.a

Total pages 34

NO PT1000
B1 SIGNAL FOR FANS (NTC)
B2 E.P. TEMPERATURE (NTC)
B3 EXTERNAL AIR TEMPERATURE (NTC)
B4 ----------

WITH PT1000
B1 ----------
B2 E.P. TEMPERATURE (NTC)
B3 EXTERNAL AIR TEMPERATURE (NTC)
B4 SIGNAL FOR FANS (PT1000)

PROBE CONNECTIONS

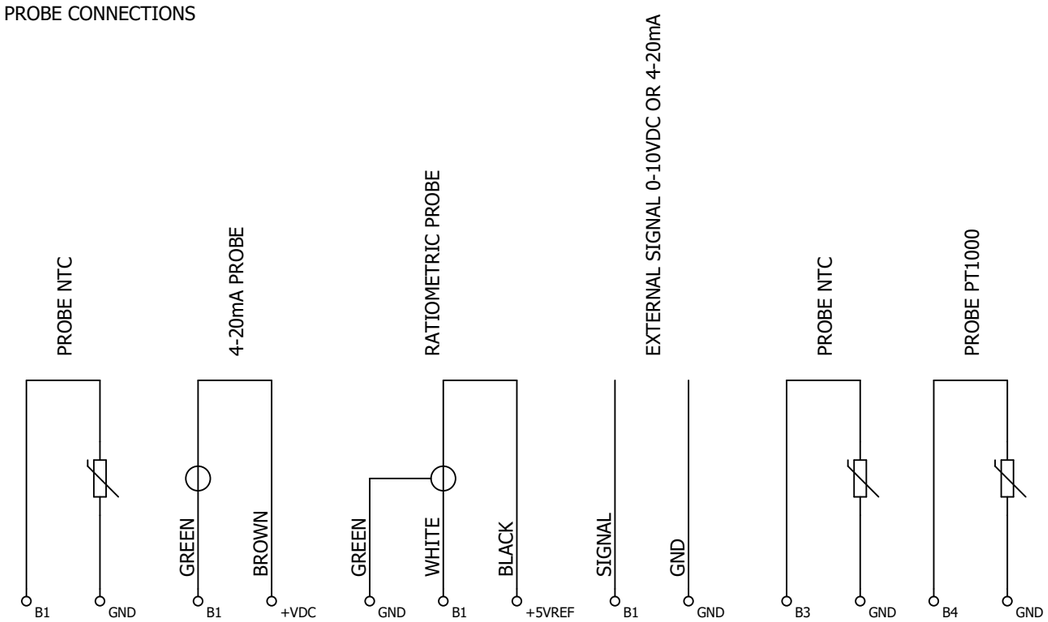

			Date	23/12/2015	CM00009729	ALFA LU-VE	Auxiliary circuit	Mounting locations + QE	Page +QE/5.a
			Elab.	Franco Menenghetti	EP 6 FANS ALFA-LUVE			Function =	Next 6
Modification	Date	Name							Total pages 34

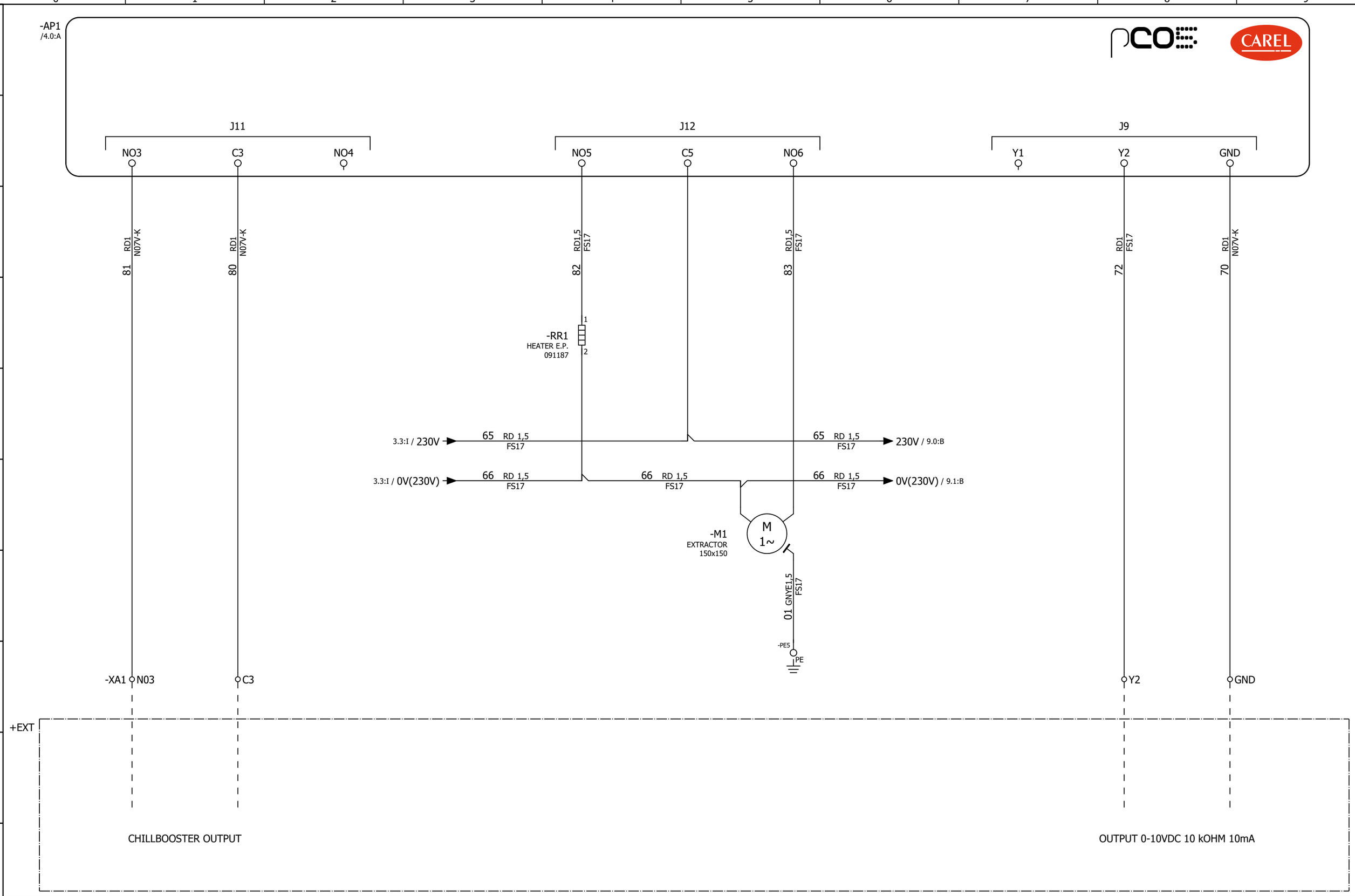

			Date	23/12/2015
			Elab.	Franco Menenghetti
Modification	Date	Name		

CM00009729

EP 6 FANS ALFA-LUVE

Auxiliary circuit

Mounting locations + QE

Function =

Page +QE/6

Next 7

Total pages 34

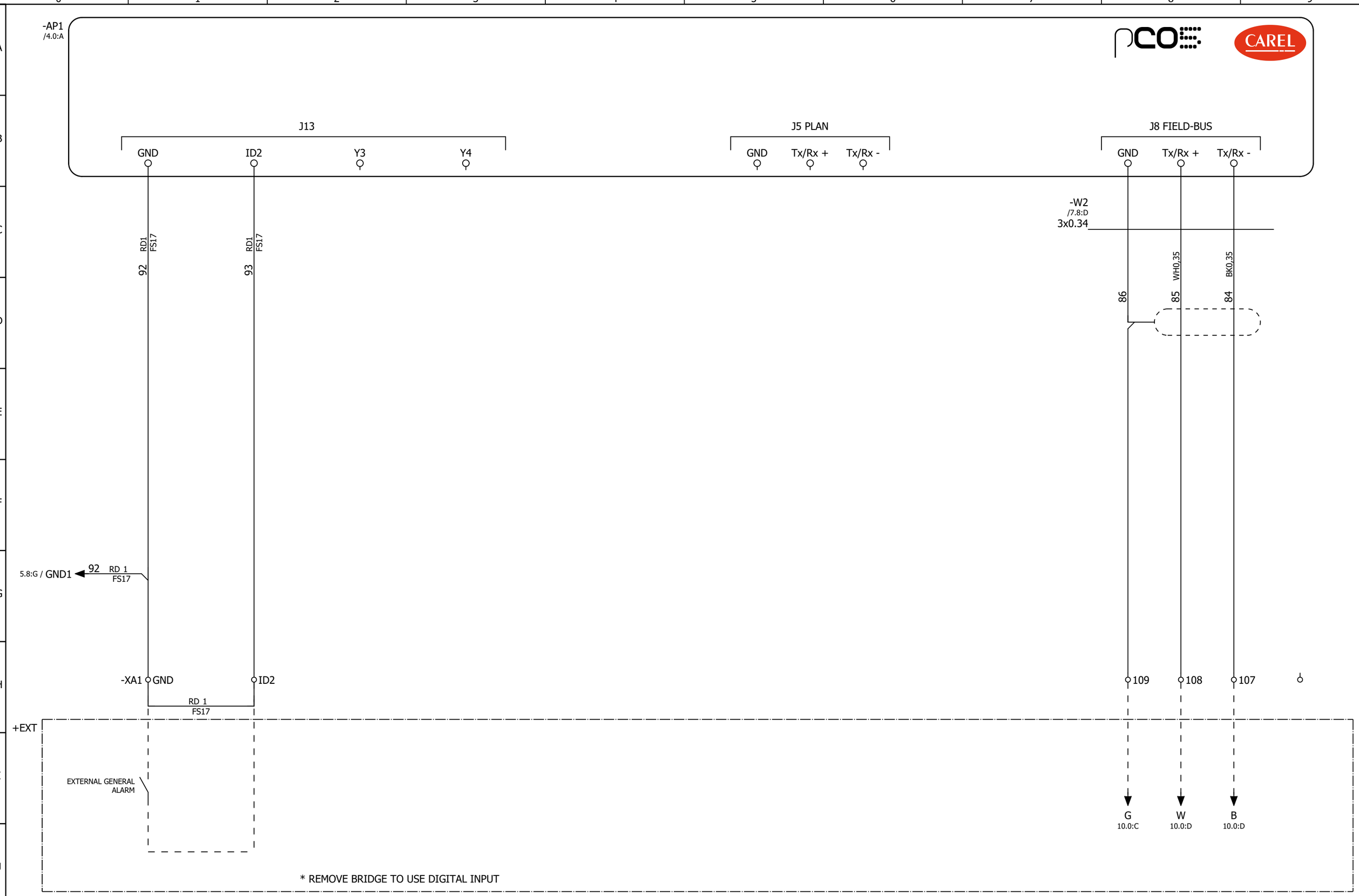

			Date	23/12/2015
			Elab.	Franco Menenghetti
Modification	Date	Name		

CM00009729

EP 6 FANS ALFA-LUVE

Auxiliary circuit

Mounting locations + QE

Function =

Page +QE/7

Next 8

Total pages 34

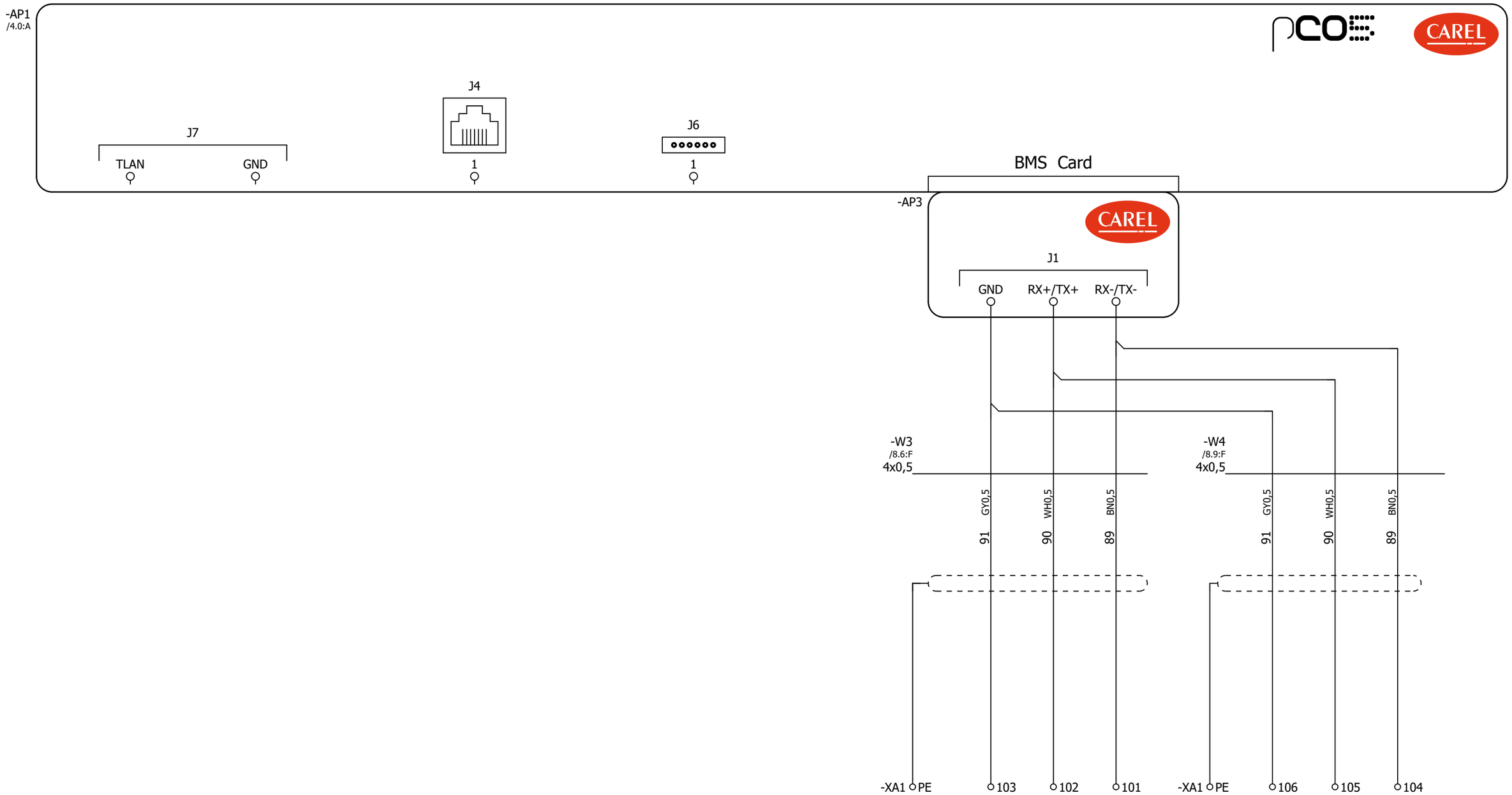

+EXT

			Date	23/12/2015
			Elab.	Franco Menenghetti
Modification	Date	Name		

CM00009729

EP 6 FANS ALFA-LUVE

Auxiliary circuit

Mounting locations + QE

Function =

Page +QE/8

Next 9

Total pages 34

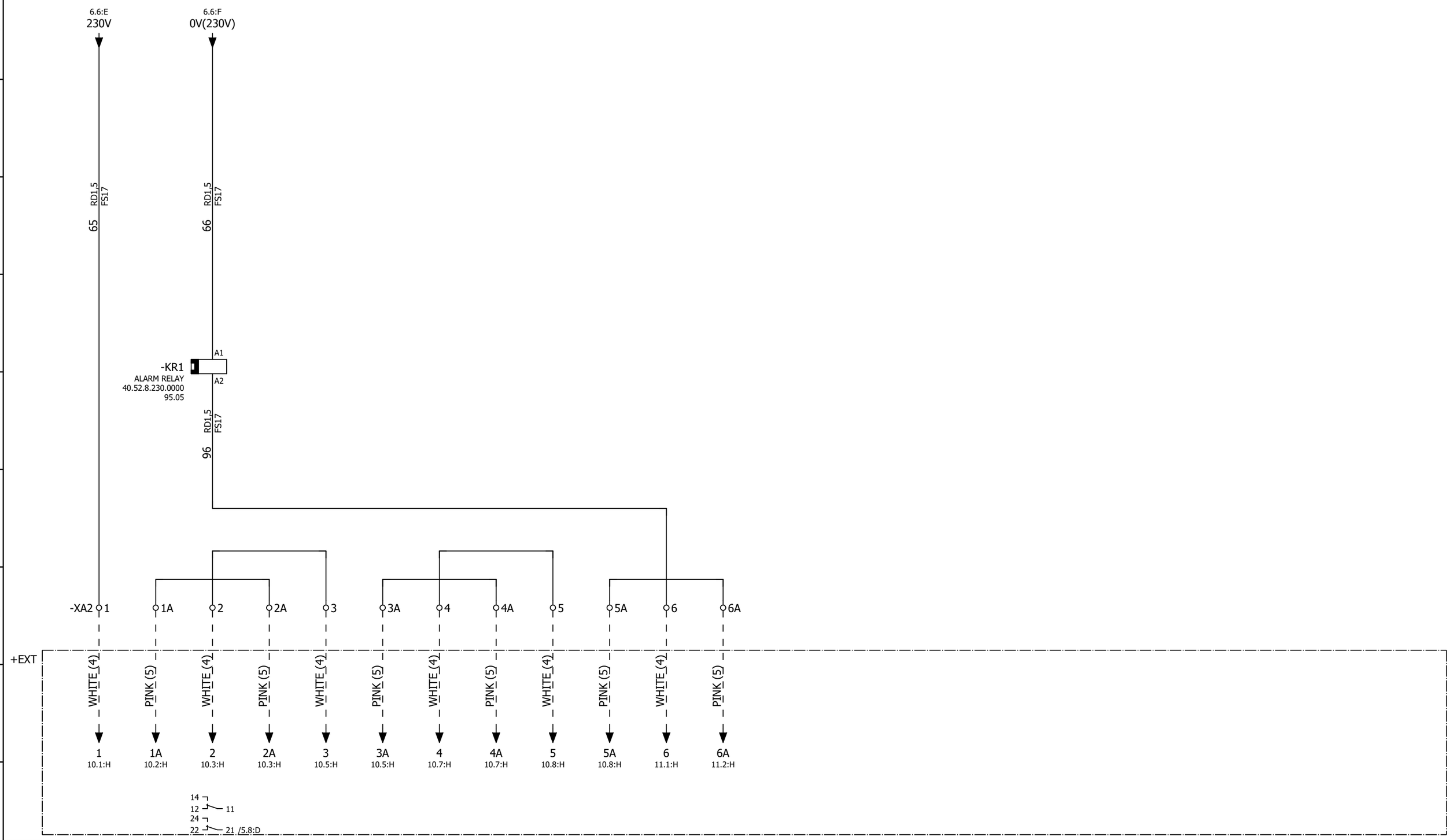

			Date	23/12/2015	CM00009729	ALFA LU-VE	Auxiliary circuit	Mounting locations + QE	Page +QE/9
			Elab.	Franco Menenghetti	EP 6 FANS ALFA-LUVE				Next 10
								Function =	Total pages 34
Modification	Date	Name							

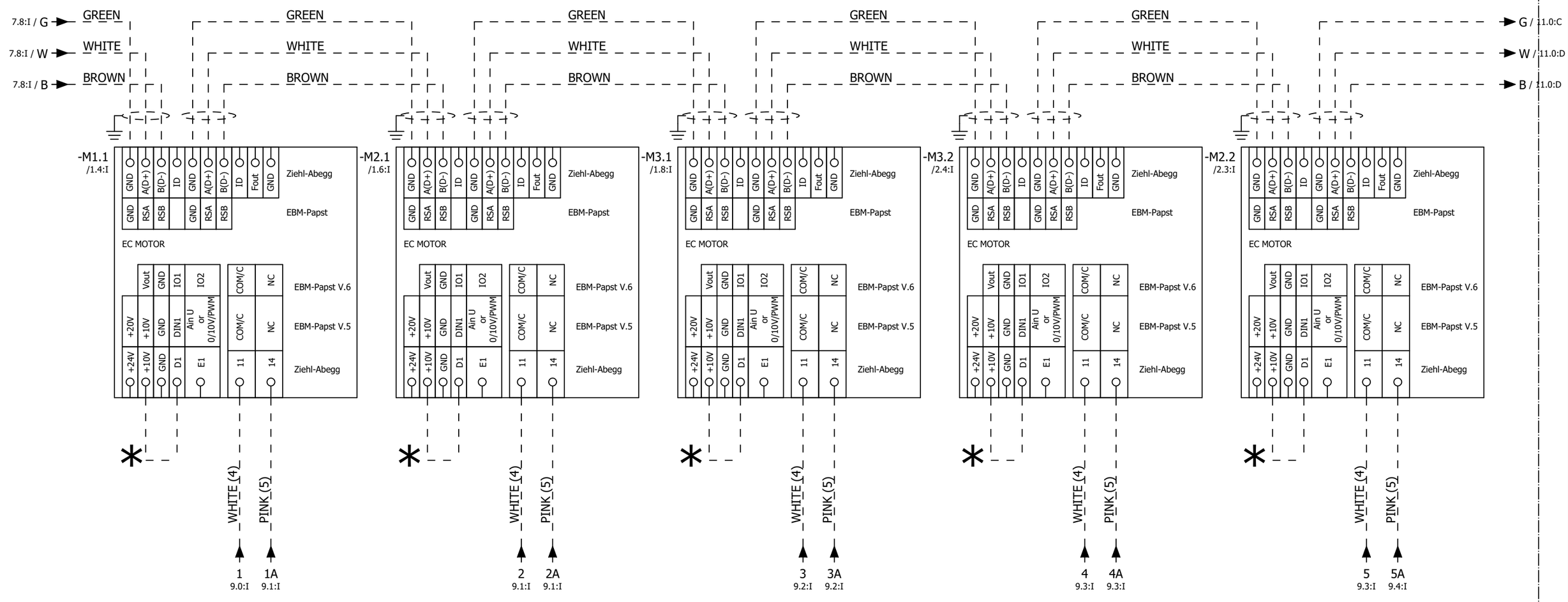

* CONNECTION NEEDED ONLY FOR ZIEHL-ABBEGG FANS

			Date	23/12/2015	CM00009729	ALFA LU-VE	Auxiliary circuit	Mounting locations + QE
			Elab.	Franco Menenghetti	EP 6 FANS ALFA-LUVE			Function =
Modification	Date	Name						

Page	+QE/10
Next	11
Total pages	34

+EXT

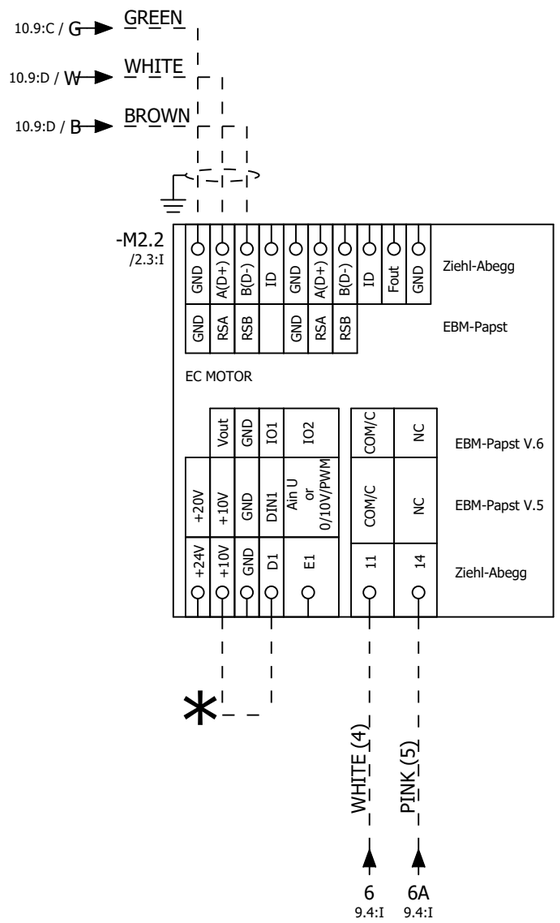

* CONNECTION NEEDED ONLY FOR ZIEHL-ABBEGG FANS

			Date	23/12/2015	CM00009729	ALFA LU-VE	Auxiliary circuit	Mounting locations + QE	Page +QE/11
			Elab.	Franco Menenghetti	EP 6 FANS ALFA-LUVE			Function =	Next 12
Modification	Date	Name							Total pages 34

6 FAN MOTORS

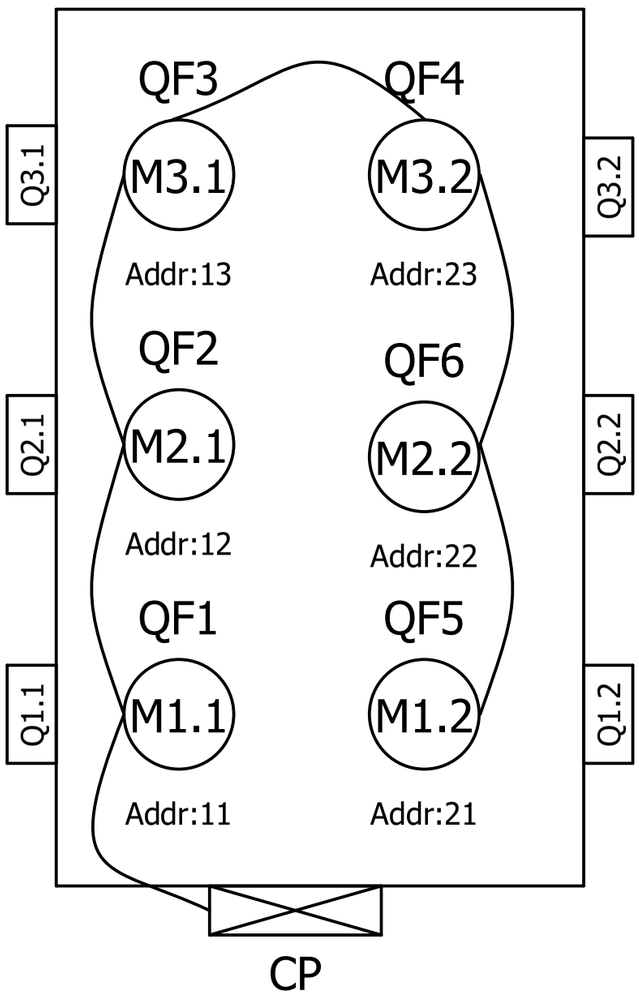

Page	+QE/12		
Next	13		
Total pages	34		
Mounting locations	+ QE		
Function	=		

Serial connection

CM00009729

EP 6 FANS ALFA-LUVE

Date	23/12/2015	
Elab.	Franco Menenghetti	
		Name
		Date
		Modification

CAREL INDUSTRIES S.p.A. - Società Unipersonale
Via dell'Industria, 11 - 35020 Brugine – Padova – Italia
Tel. (+39) 049.9716611 – Fax (+39) 049.9716600
www.carel.com – e-mail: carel@carel.com

Cap. Soc. € 10.000.000 i.v.
C.C.I.A.A. Padova Reg. Imp n. 4359090281
Part. IVA e Cod. Fisc. 04359090281
Società soggetta ad attività di direzione e coordinamento di Carel S.p.A.

CE

EU Declaration of Conformity

Manufacturer: **CAREL Industries S.p.A.**
Via dell'Industria, 11 35020 Brugine (PD) Italy

Electric Control Panels series Carel Power Solutions
Code :
Serial number:

CM00009729 / CM00009731

The manufacturer declares that all the above indicated products are in accordance with the EU Directives:

2006/95/EC (LVD)

and comply with the requirements of the following European standards:

EN 60204-1

Brugine, 23/12/2015

CAREL INDUSTRIES S.p.A.
Technical Director

Ing. Umberto Bianchini

Modification			
Date			
Name			
		Date	23/12/2015
		Elab.	Franco Menenghetti

CM00009729
EP 6 FANS ALFA-LUVE

ALFA LU-VE

Serial connection

Mounting locations + QE
Function =
Page +QE/13
Next =REP1+/1,0
Total pages 34

Multicore cables scheme

Carel STD-V2

Cable type PROBE CABLE

Oracle code PROBE CABLE

Total Cable Length Cut:

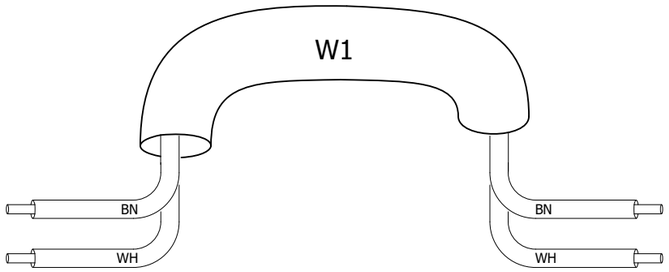

Departure Cross ref. Terminator

Terminator Cross ref. Arrival

Unsheathing cable departure

Unsheathing cable arrival

			Date	23/12/2015
			Elab.	Franco Menenghetti
Modification	Date	Name		

CM00009729

EP 6 FANS ALFA-LUVE

ALFA LU-VE

Multicore cables scheme

Mounting locations +

Function =REP1

Page =REP1/1,0

Next 1,1

Total pages 34

Multicore cables scheme

Cable type Belden

Oracle code 1008176AXX

Total Cable Length Cut:

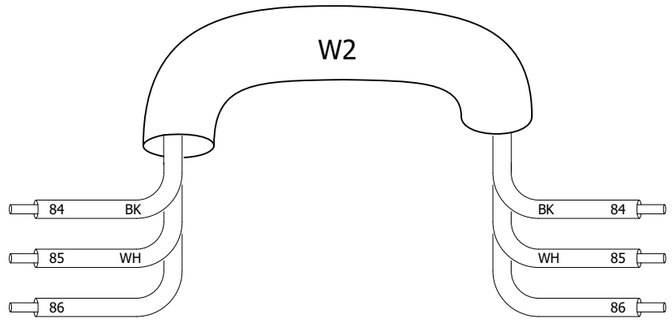

Departure	Cross ref.	Terminator	Terminator	Cross ref.	Arrival
XA1:107:A	+QE/7.8:H			+QE/7.8:B	+QE-AP1:J8 FIELD-BUS:Tx/Rx -
XA1:108:B	+QE/7.8:H			+QE/7.8:B	+QE-AP1:J8 FIELD-BUS:Tx/Rx +
XA1:109:A	+QE/7.8:H			+QE/7.8:B	+QE-AP1:J8 FIELD-BUS:GND

Unsheathing cable departure

Unsheathing cable arrival

			Date	23/12/2015	CM00009729	ALFA LU-VE	Multicore cables scheme	Mounting locations +	Page =REP1/1,1
			Elab.	Franco Menenghetti	EP 6 FANS ALFA-LUVE				Next 1,2
								Function =REP1	Total pages 34
Modification	Date	Name							

Multicore cables scheme

Carel STD-V2

Cable type Shielded 3x0.5

Oracle code 1008019AXX

Total Cable Length Cut:

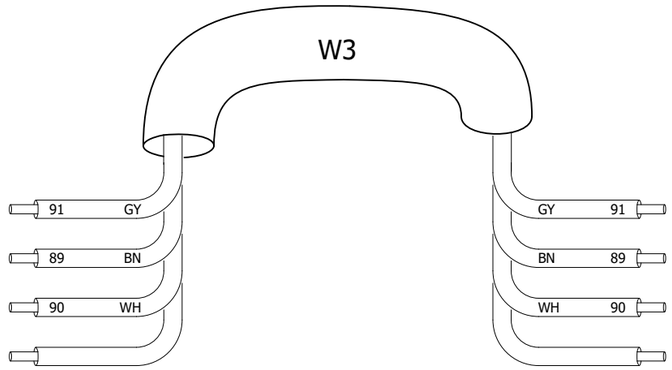

Departure	Cross ref.	Terminator	Terminator	Cross ref.	Arrival
XA1:103:A	+QE/8.6:H			+QE/8.6:C	+QE-AP3:J1:GND
XA1:101:A	+QE/8.7:H			+QE/8.7:C	+QE-AP3:J1:RX-/TX-
XA1:102:B	+QE/8.6:H			+QE/8.6:C	+QE-AP3:J1:RX+/TX+
XA1:PE:B	+QE/8.5:H			+QE/8.5:E	W3

Unsheathing cable departure

Unsheathing cable arrival

			Date	23/12/2015	CM00009729	ALFA LU-VE	Multicore cables scheme	Mounting locations +	Page =REP1/1,2
			Elab.	Franco Menenghetti	EP 6 FANS ALFA-LUVE				Next 1,3
								Function =REP1	Total pages 34
Modification	Date	Name							

Multicore cables scheme

Carel STD-V2

Cable type Shielded 3x0.5

Oracle code 1008019AXX

Total Cable Length Cut:

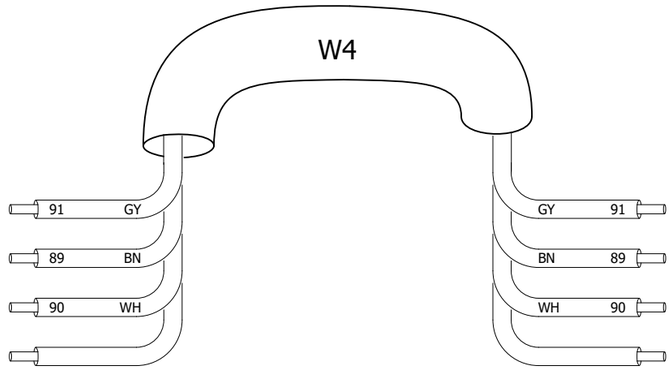

Departure	Cross ref.	Terminator	Terminator	Cross ref.	Arrival
XA1:106:B	+QE/8.8:H			+QE/8.6:C	+QE-AP3:J1:GND
XA1:104:B	+QE/8.8:H			+QE/8.7:C	+QE-AP3:J1:RX-/TX-
XA1:105:A	+QE/8.8:H			+QE/8.6:C	+QE-AP3:J1:RX+/TX+

Unsheathing cable departure

Unsheathing cable arrival

			Date	23/12/2015
			Elab.	Franco Menenghetti
Modification	Date	Name		

CM00009729

EP 6 FANS ALFA-LUVE

ALFA LU-VE

Multicore cables scheme

Mounting locations +

Function =REP1

Page =REP1/1,3

Next 2,0

Total pages 34

Terminal diagram

Terminal strip

XA1

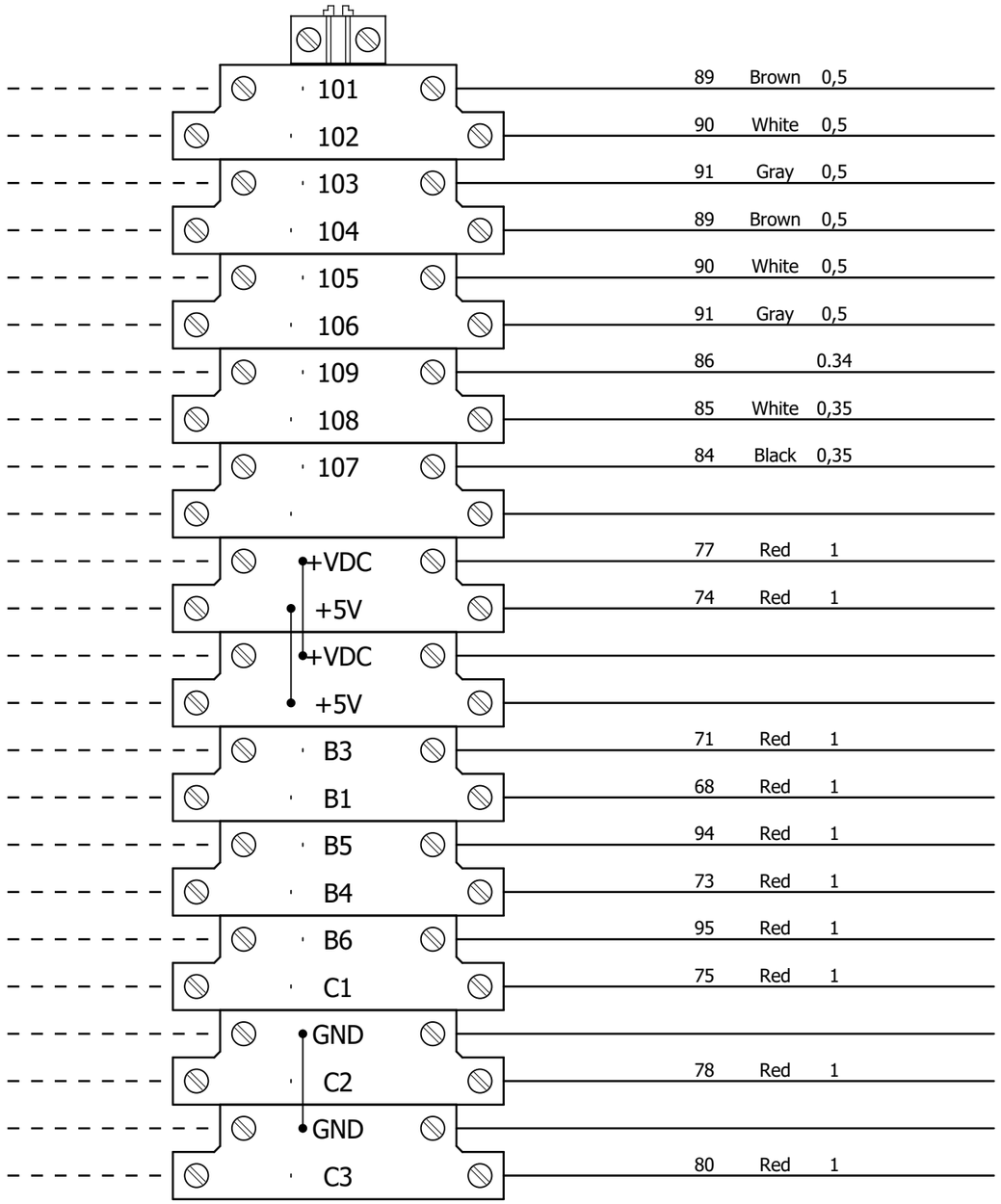

External targets	Teminal type	Terminal position on the drawings
	STTB 2,5	+QE/8.7:H
		+QE/8.6:H
	STTB 2,5	+QE/8.6:H
		+QE/8.8:H
	STTB 2,5	+QE/8.8:H
		+QE/8.8:H
	STTB 2,5	+QE/7.8:H
		+QE/7.8:H
	STTB 2,5	+QE/7.8:H
		+QE/7.9:H
	STTB 2,5	+QE/5.7:H
		+QE/5.7:H
	STTB 2,5	+QE/5.8:H
		+QE/5.7:H
	STTB 2,5	+QE/5.3:H
		+QE/5.2:H
	STTB 2,5	+QE/5.5:H
		+QE/5.4:H
	STTB 2,5	+QE/5.5:H
		+QE/4.4:H
	STTB 2,5	+QE/5.2:H
		+QE/4.8:H
	STTB 2,5	+QE/5.3:H
		+QE/6.1:H

Terminal diagram

Terminal strip

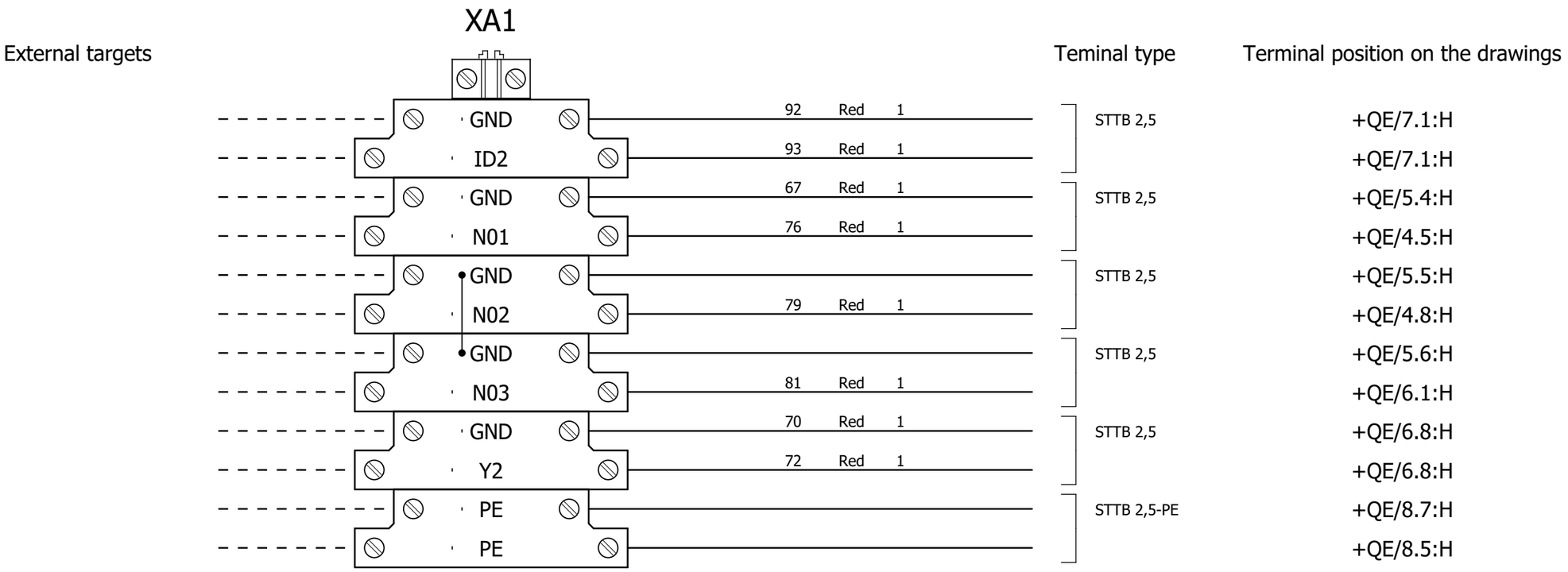

			Date	23/12/2015	CM00009729	ALFA LU-VE	Terminal strip	Mounting locations +	Page =REP1/2,0.a
			Elab.	Franco Menenghetti	EP 6 FANS ALFA-LUVE				Next 2,1
								Function =REP1	Total pages 34
Modification	Date	Name							

Terminal diagram

Terminal strip

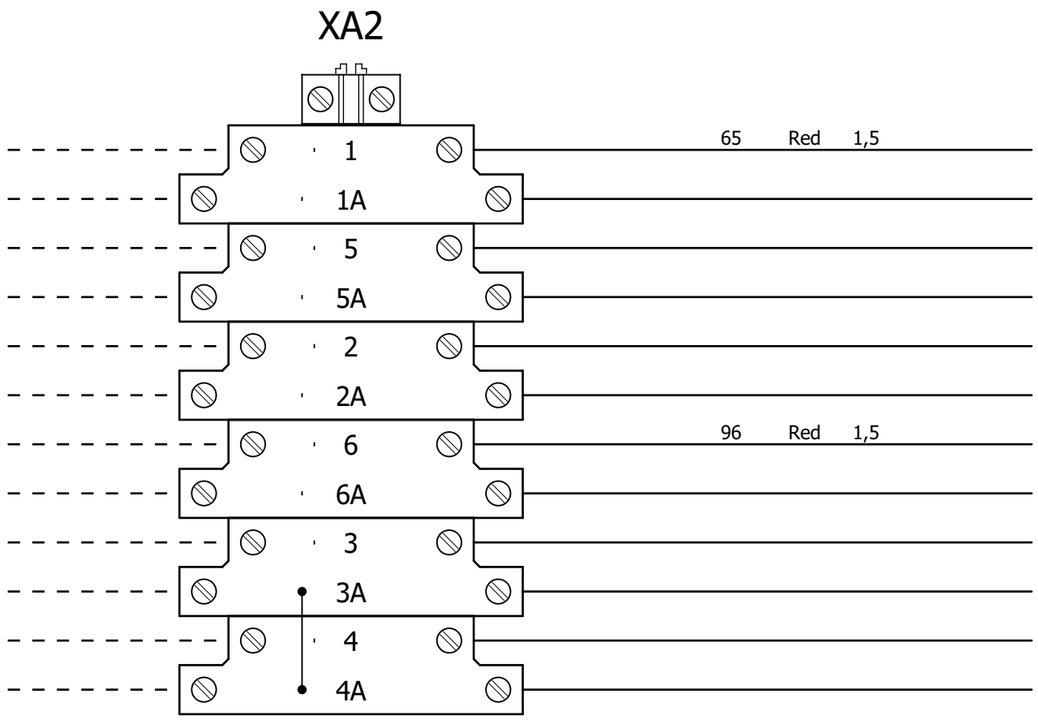

External targets	Teminal type	Terminal position on the drawings
	STTB 2,5	+QE/9.0:H
		+QE/9.1:H
	STTB 2,5	+QE/9.3:H
		+QE/9.4:H
	STTB 2,5	+QE/9.1:H
		+QE/9.1:H
	STTB 2,5	+QE/9.4:H
		+QE/9.4:H
	STTB 2,5	+QE/9.2:H
		+QE/9.2:H
	STTB 2,5	+QE/9.3:H
		+QE/9.3:H

BOM internal panel

InternoQE_F01_003

Short name	Designation	Function text	Position	Manufacturer	Component tipe	Oracle code
AP1	Programmable control		=+QE/4.0:A	CAREL	PCO Compact	PCOXLV0DB0
AP2	Damping magnet, M 5.0	FERRITE 2 SPIRE	=+QE/4.1:D	KE-KITAGAWA	FERRITE CORE	0907877AXX
AP3	Scheda seriale BMS		=+QE/8.6:B	CAREL	Scheda seriale BMS	PCOS004850
E1	Earth terminal	GROUND BAR	=+QE/1.2:D	SCHNEIDER ELECTRIC	14977	2217096CEL
HL1	White lamp 24Vac	POWER ON	=+QE/4.1:F	EATON ELECTRIC	M22-LED-W	0505103CEL
HL1	Plate	=	=+QE/4.1:F	CEMBRE	15X27	1800243AXX
HL1	Support plate	=	=+QE/4.1:F	CEMBRE	D22 17X30	1800242AXX
HL1	Glass plate	=	=+QE/4.1:F	CEMBRE	15X27	1800244AXX
HL1	Support	=	=+QE/4.1:F	EATON ELECTRIC	M22-A	0505184AXX
HL1	White indicator plate	=	=+QE/4.1:F	EATON ELECTRIC	216771	0505111CEL
KR1	Relay	ALARM RELAY	=+QE/9.1:E	FINDER	40.52.8.230.0000	0100751CEL
KR1	Base element	=	=+QE/9.1:E	FINDER	95.05	5931384AXX
KR2	Base element		(Quadro elettri co)	FINDER	95.05	5931384AXX
KR2	Relay		(Quadro elettri co)	FINDER	40.52.8.230.0000	0100751CEL
M1	Internal fan	EXTRACTOR	=+QE/6.5:F	EZM	150x150	1312697AXX
PE	GROUND		=+QE/1.1:H		PE	PE
PE2	GROUND		=+QE/1.2:H		PE	PE
PE3	GROUND		=+QE/1.3:H		PE	PE
PE4	GROUND		=+QE/3.4:H		PE	PE
PE5	GROUND		=+QE/6.5:G		PE	PE
QF1	Power circuit breaker	PROTECTION 1	=+QE/1.4:C	EATON ELECTRIC	FAZ6-C10/3	0403856CEL
QF2	Power circuit breaker	PROTECTION 2	=+QE/1.6:C	EATON ELECTRIC	FAZ6-C10/3	0403856CEL
QF3	Power circuit breaker	PROTECTION 3	=+QE/1.8:C	EATON ELECTRIC	FAZ6-C10/3	0403856CEL

BOM internal panel

InternoQE_F01_003

Short name	Designation	Function text	Position	Manufacturer	Component tipe	Oracle code
QF4	Power circuit breaker	PROTECTION 4	=+QE/2.1:C	EATON ELECTRIC	FAZ6-C10/3	0403856CEL
QF5	Power circuit breaker	PROTECTION 5	=+QE/2.3:C	EATON ELECTRIC	FAZ6-C10/3	0403856CEL
QF6	Power circuit breaker	PROTECTION 6	=+QE/2.4:C	EATON ELECTRIC	FAZ6-C10/3	0403856CEL
QF21	Power circuit breaker	TRANSFORMER PROTECTION	=+QE/3.2:B	EATON ELECTRIC	FAZ6-C4/2	0403468AXX
QF22	Power circuit breaker	SECONDARY PROTECTION 24V	=+QE/3.2:G	EATON ELECTRIC	FAZ6-C4/1	0403824AXX
QF23	Power circuit breaker	230V SECONDARY PROTECTION	=+QE/3.3:G	EATON ELECTRIC	FAZ6-C2/1	0403819AXX
QS1	Disconnect switch	MAIN SWITCH	=+QE/1.1:E	SOCOMEC	Sirco M80	0402331AXX
QS1	Operation	=	=+QE/1.1:E	SOCOMEC	Y/R 16-80A	0402333AXX
RR1	Scaldiglia 200W 230V	HEATER E.P.	=+QE/6.4:D	EZM	091187	5729759AXX
ST1	SENSOR NTC WH IP68 -50T105 CABLE 1,5M	CABINET TEMPERATURE	=+QE/5.3:E	CAREL	NTC015WH01	NTC015WH01
TC1	TRANSFORMER	TRANSFORMER	=+QE/3.2:D		400V-230V 310VA//24V 60AV - 230V 250VA	0910244AXX

BOM external panel

EsternoQE_F01_003

Place	Short name	Function text	Position	Technical characteristics
+EXT	M1.1	Fan	=+QE/1.4:I	
+EXT	M1.2	=	=+QE/2.1:I	
+EXT	M2.1	=	=+QE/1.6:I	
+EXT	M2.2	=	=+QE/2.3:I	
+EXT	M3.1	=	=+QE/1.8:I	
+EXT	M3.2	=	=+QE/2.4:I	
+EXT	ST1	SIGNAL FOR FANS	=+QE/5.2:I	
+EXT	ST2	EXTERNAL AIR TEMP	=+QE/5.3:I	
+EXT	ST3	SIGNAL FOR FANS REGULATOR	=+QE/5.4:I	

alfa.luvegroup.com

Product code	CMAL0ME001	Rev	1
Project description	EP 4 FANS ALFA LU-VE DOUBLE GROUP WITH BOX STANDARD		

Supply voltage	3P+N+E - 400V - 50Hz	Operating temperature	40°C
Rated current	26A Icc 6KA		
Auxiliary voltage	24Vac/230Vac		

Designed by	Filippo Gregolin	on	27/06/2017
Checked by	Andrea Bacchin	on	27/06/2017
Approved by	Franco Meneghetti	on	27/06/2017

NOT ALLOWED DELIVER TO THIRD PARTIES OR REPRODUCE THIS DOCUMENT NOT USE THE CONTENT OR OTHERWISE MAKE KNOWN TO THIRD PARTIES WITHOUT OUR EXPRESS PERMISSION. ANY INFRINGEMENT WILL RESULT IN DAMAGES SUFFERED. And it MADE SUBJECT TO ALL RIGHTS UNDER PATENTS OR MODELS

Cables Range

Cross-sect	N07V-K Range (A)	N07G9 Range (A)
0,5	\	NOT AVAILABLE
0,75	\	NOT AVAILABLE
1	8A	12A
1,5	11A	16A
2,5	15A	22.4A
4	20A	29.6A
6	26A	38.4A
10	36A	52.8A
16	48A	70.4A
25	64A	93.6A
35	80A	115.2A
50	95A	140A
95	150A	177.6A
120	170A	215.2A
150	195A	NOT AVAILABLE
185	220A	NOT AVAILABLE
240	260A	NOT AVAILABLE
300	300A	NOT AVAILABLE

Colors Table

Colors	Short name
Red	RD
Black	BK
Yellow	YE
Yellow\Green	GNYE
Orange	OG
Light blue	TQ
Blue	BU
Pink	PK
White	WH
Gray	GY
Brown	BN
Green	GN
Purple	VT
\	
\	
\	
\	

REVIEW TABLE

Rev.	Technical name	Date	Note
01	Quaggia L.	29/01/2020	- -

Table of contents

F06_003

Page	Page type	Page description	Date	Edited by
/1	Title page / cover sheet	Title page	29/01/2020	Luca Quaggia
/2	Pre-planning	Technical information	31/01/2020	Luca Quaggia
/3	Table of contents	Table of contents	31/01/2020	Luca Quaggia
/4	Model view	General view	31/01/2020	Luca Quaggia
/5	Model view	View of all sides	31/01/2020	Luca Quaggia
/6	Model view	Mounting plate view	31/01/2020	Luca Quaggia
/7	Model view	Door view	31/01/2020	Luca Quaggia
/8	Model view	Guides view	31/01/2020	Luca Quaggia
/9	Model view	Channels view	31/01/2020	Luca Quaggia
/10	Model view	Bottom view	31/01/2020	Luca Quaggia
+QE/1	Schematic multi-line	Power circuit	29/01/2020	Luca Quaggia
+QE/2	Schematic multi-line	Power circuit	29/01/2020	Luca Quaggia
+QE/4	Schematic multi-line	Power circuit	29/01/2020	Luca Quaggia
+QE/5	Schematic multi-line	Auxiliary circuit	30/01/2020	Luca Quaggia
+QE/7	Schematic multi-line	Auxiliary circuit	30/01/2020	Luca Quaggia
+QE/8.a	Schematic multi-line	Auxiliary circuit	29/01/2020	Luca Quaggia
+QE/9	Schematic multi-line	Auxiliary circuit	30/01/2020	Luca Quaggia
+QE/11	Schematic multi-line	Auxiliary circuit	30/01/2020	Luca Quaggia
+QE/13	Schematic multi-line	Auxiliary circuit	30/01/2020	Luca Quaggia
+QE/15	Schematic multi-line	Auxiliary circuit	29/01/2020	Luca Quaggia
+QE/16	Schematic multi-line	Auxiliary circuit	29/01/2020	Luca Quaggia
+QE/18	Graphic	Serial connection	30/01/2020	Luca Quaggia
+QE/19	Graphic	Certificazione	29/01/2020	Luca Quaggia
=REP1/1,0	Cable diagram	Multicore cables scheme	30/01/2020	Luca Quaggia
=REP1/1,1	Cable diagram	Multicore cables scheme	30/01/2020	Luca Quaggia
=REP1/1,2	Cable diagram	Multicore cables scheme	30/01/2020	Luca Quaggia
=REP1/1,3	Cable diagram	Multicore cables scheme	30/01/2020	Luca Quaggia
=REP1/2,0	Terminal diagram	Terminal strip	30/01/2020	Luca Quaggia
=REP1/2,0.a	Terminal diagram	Terminal strip	30/01/2020	Luca Quaggia
=REP1/2,1	Terminal diagram	Terminal strip	30/01/2020	Luca Quaggia
=REP1/3,0	Parts list	BOM internal panel	30/01/2020	Luca Quaggia
=REP1/3,0.a	Parts list	BOM internal panel	30/01/2020	Luca Quaggia
=REP1/4,0	Parts list	BOM external panel	30/01/2020	Luca Quaggia

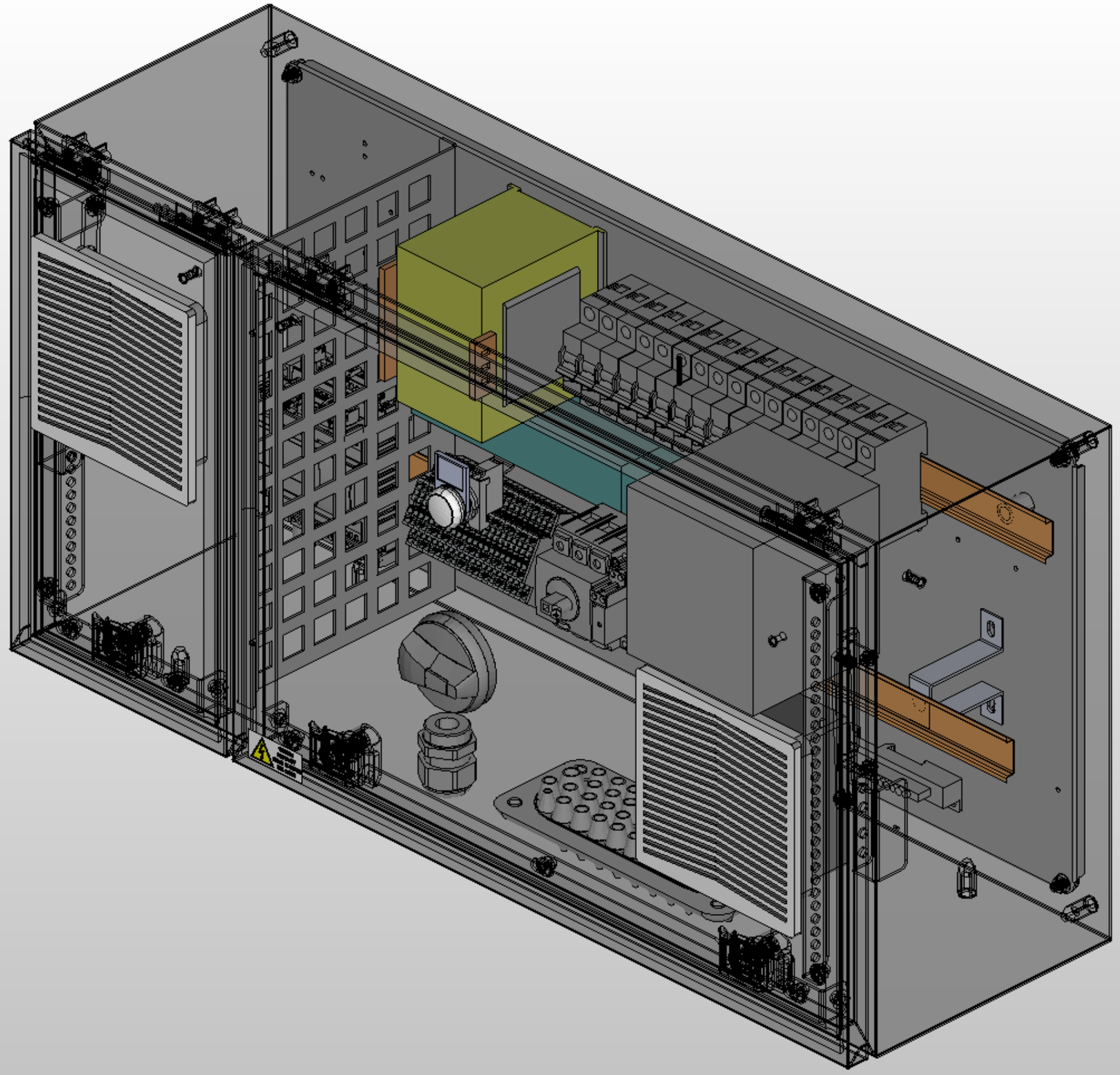

			Date	27/06/2017	CMAL0ME001	ALFA LU-VE	General view	Mounting locations +	Page /4
			Elab.	Filippo Gregolin	EP 4 FANS ALFA LU-VE DOUBLE GROUP WITH BOX STANDARD				Next 5
								Function =	Total pages 33
Modification	Date	Name							

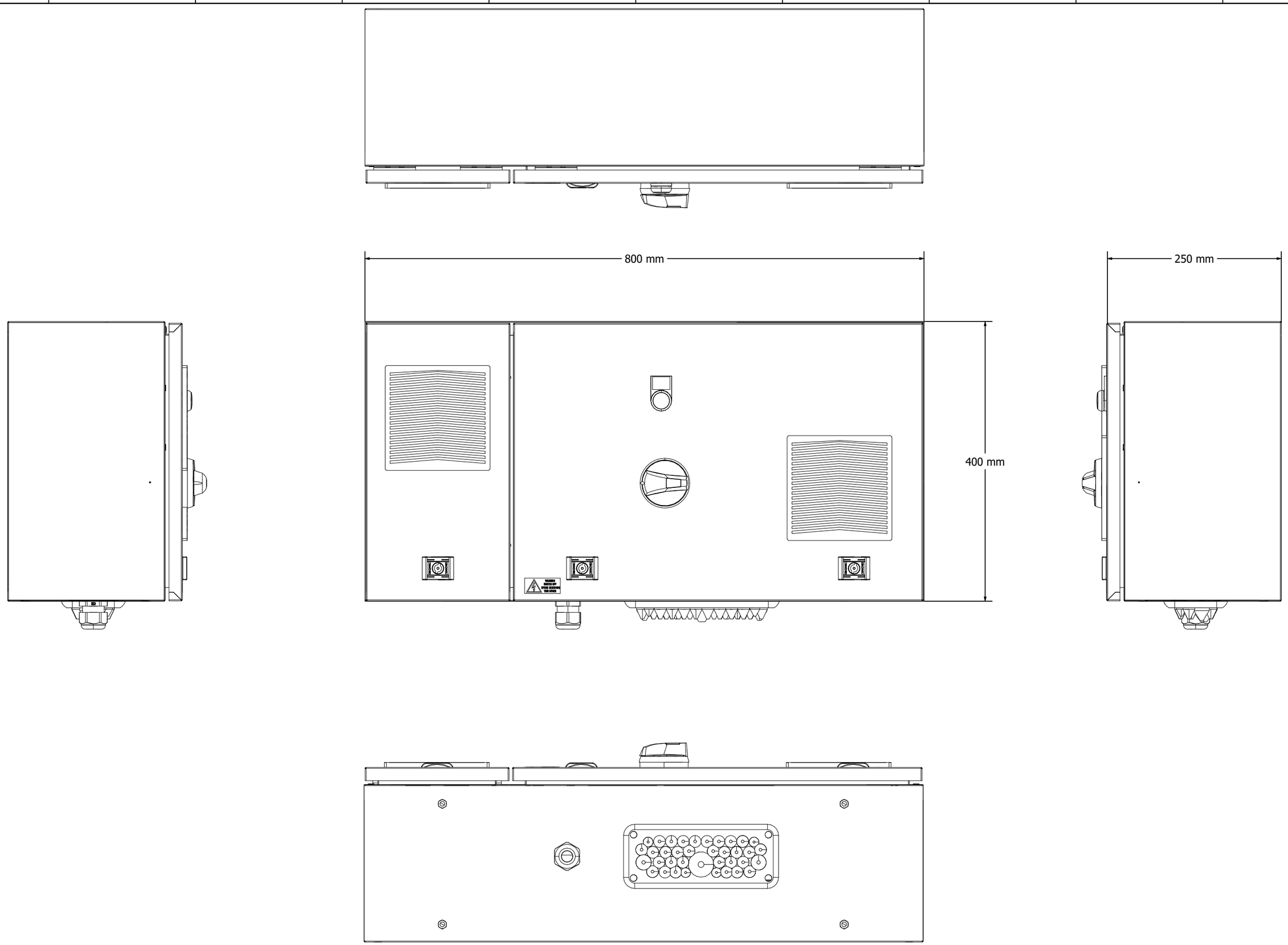

			Date	27/06/2017	CMAL0ME001	ALFA LU-VE	View of all sides	Mounting locations +	Page /5
			Elab.	Filippo Gregolin	EP 4 FANS ALFA LU-VE DOUBLE GROUP WITH BOX STANDARD				Next 6
Modification	Date	Name						Function =	Total pages 33

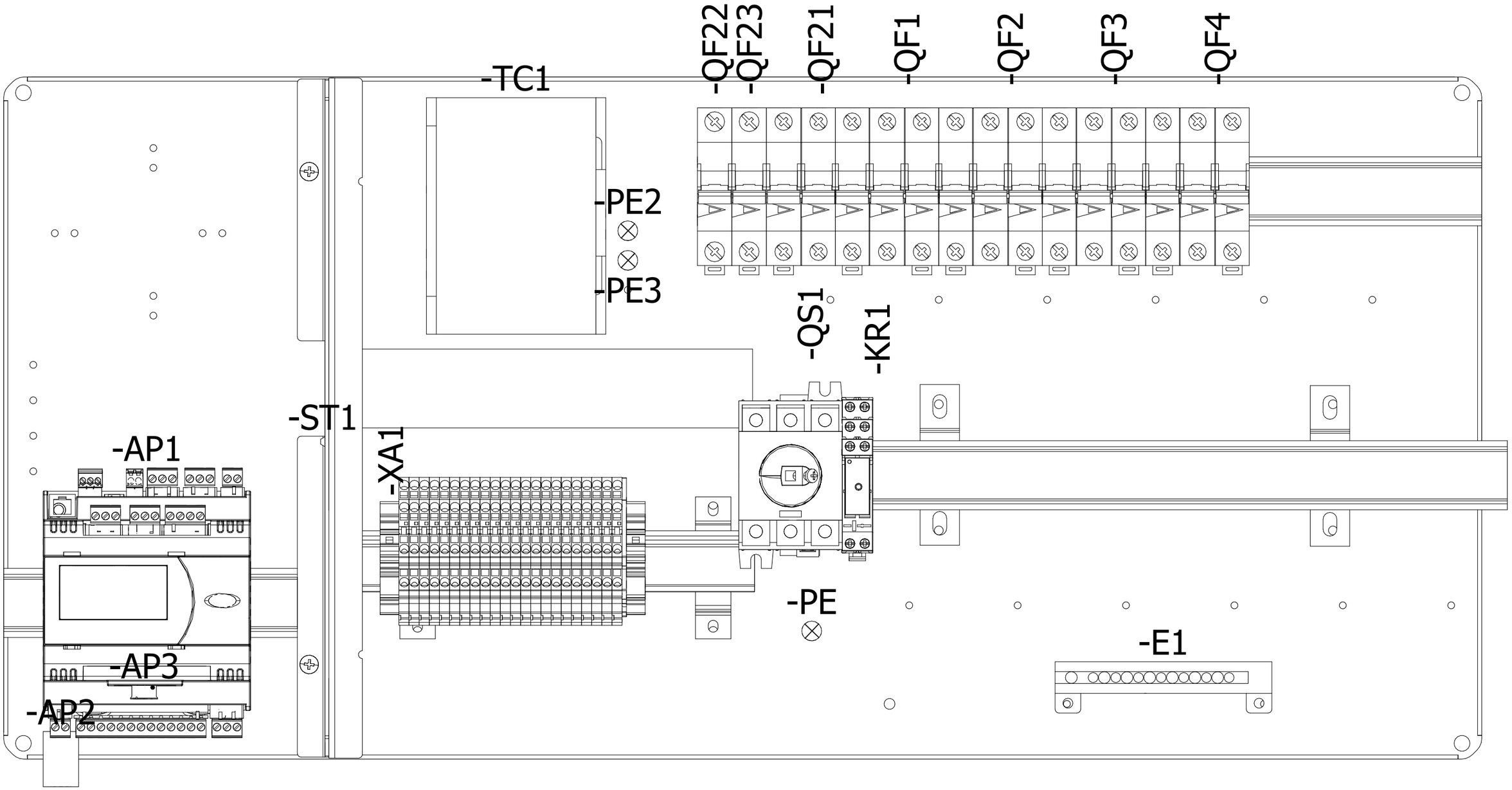

			Date	27/06/2017	CMAL0ME001	ALFA LU-VE	Mounting plate view	Mounting locations +	Page /6
			Elab.	Filippo Gregolin	EP 4 FANS ALFA LU-VE DOUBLE GROUP WITH BOX STANDARD				Next 7
Modification	Date	Name						Function =	Total pages 33

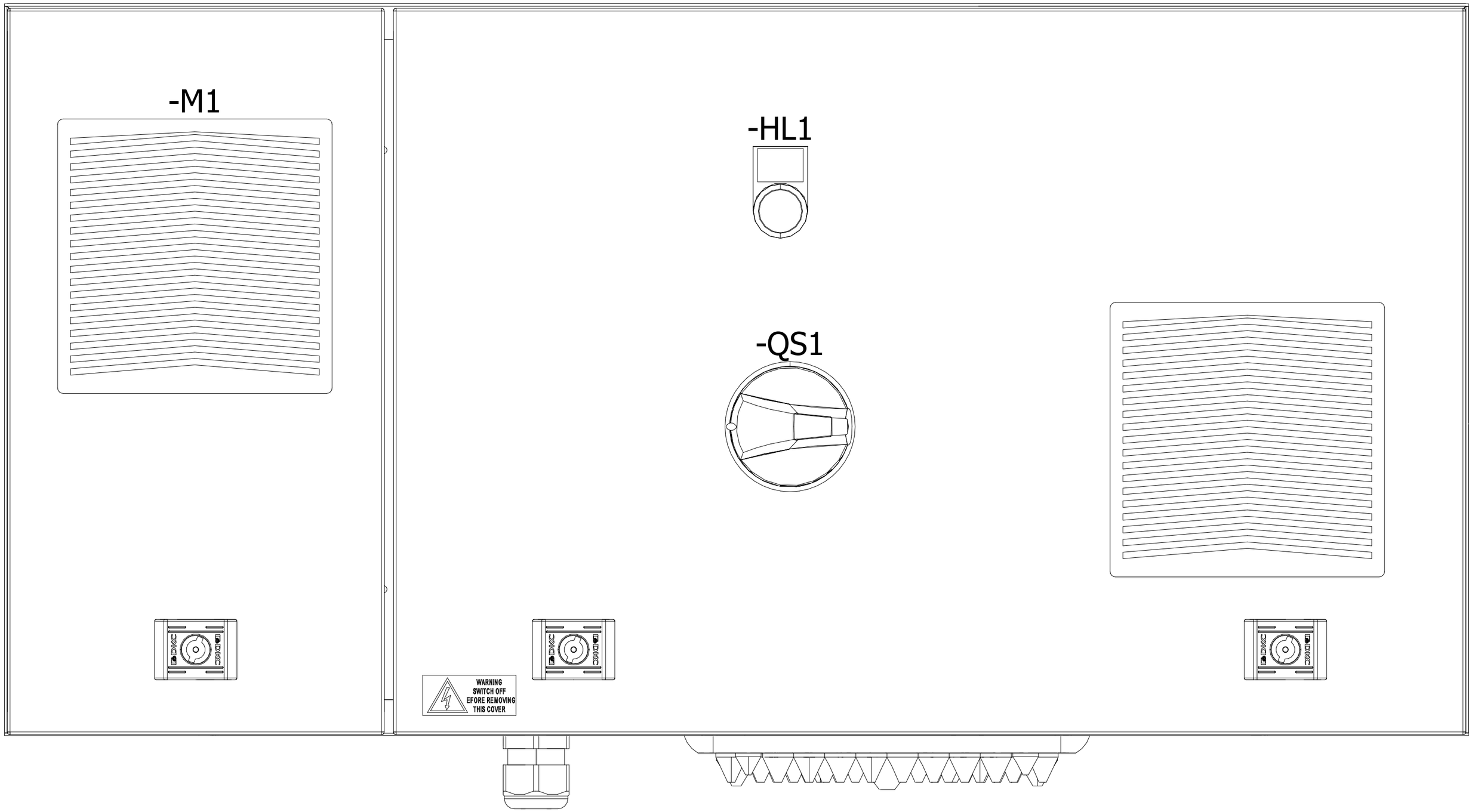

			Date	27/06/2017
			Elab.	Filippo Gregolin
Modification	Date	Name		

CMAL0ME001

EP 4 FANS ALFA LU-VE DOUBLE GROUP WITH BOX STANDARD

ALFA LU-VE

Door view

Mounting locations +

Function =

Page /7

Next 8

Total pages 33

Layout guides and channels

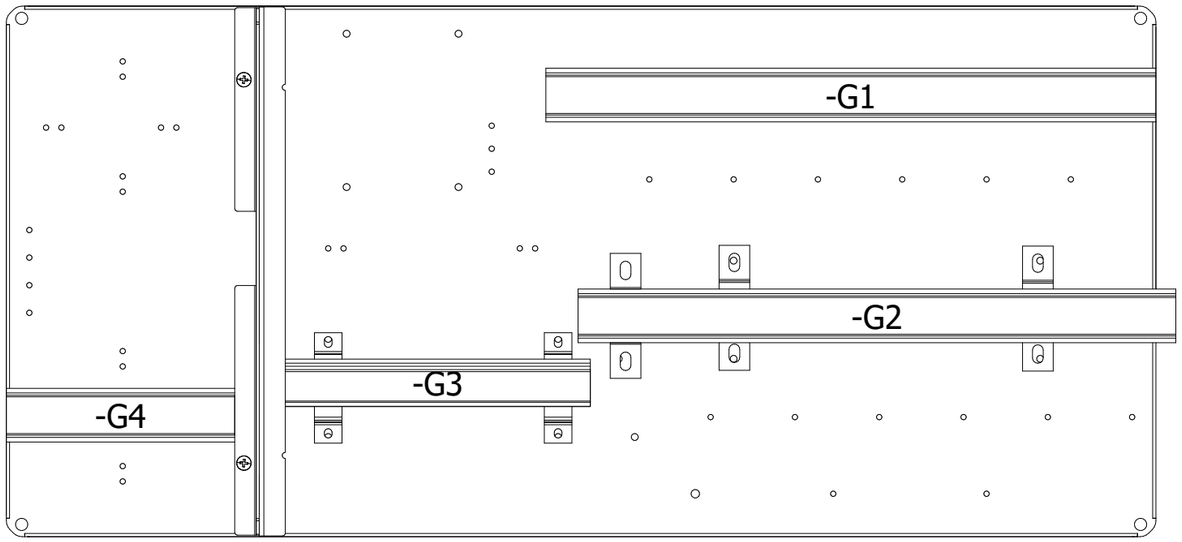

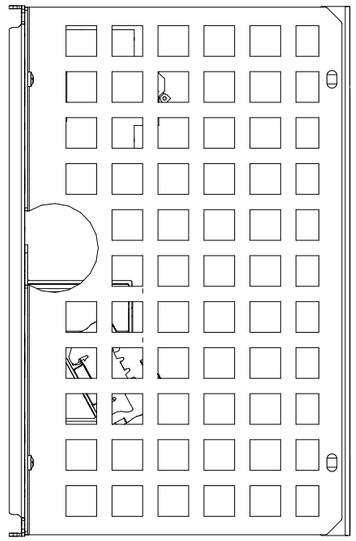

Sign	Type	Length (Tollerance -5mm)
U6	Inclined Bracket	
U7	Inclined Bracket	

G1	35x7.5	400 mm
G2	35x7.5	390 mm
G3	35x7.5	200 mm
G4	35x7.5	150 mm

U5	Support H=70mm	
U4	Support H=70mm	
U8	Support H=70mm	

U1	2cm Rise	
U2	2cm Rise	
U3	2cm Rise	

Empty

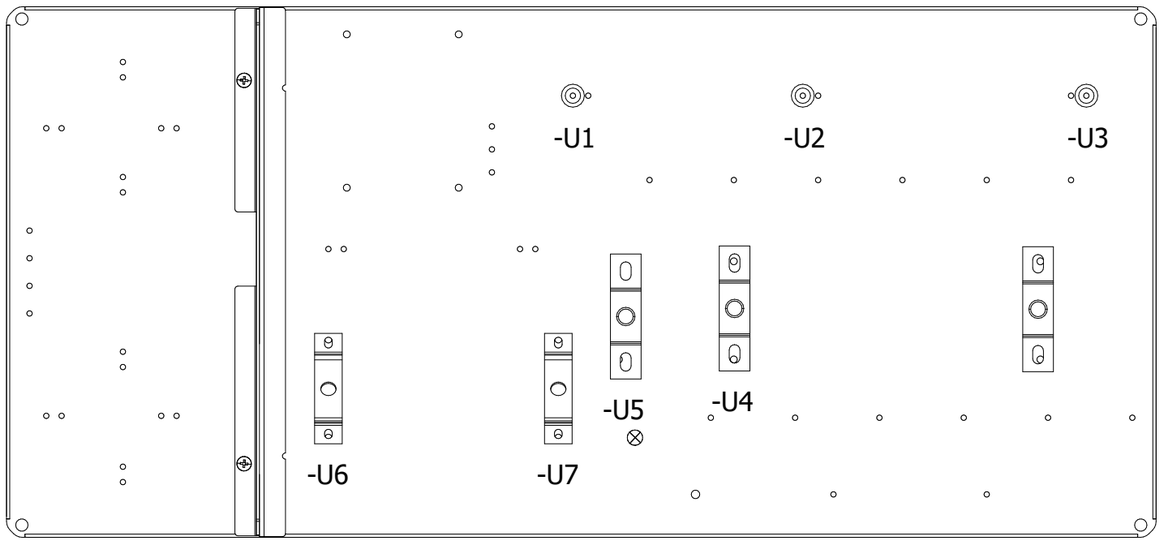

Empty

			Date	27/06/2017
			Elab.	Filippo Gregolin
Modification	Date	Name		

CMAL0ME001

EP 4 FANS ALFA LU-VE DOUBLE GROUP WITH BOX STANDARD

ALFA LU-VE

Guides view

Mounting locations +

Function =

Page /8

Next 9

Total pages 33

Layout guides and channels

Sign	Type	Length (Tollerance -5mm)
C1	40x60	205 mm

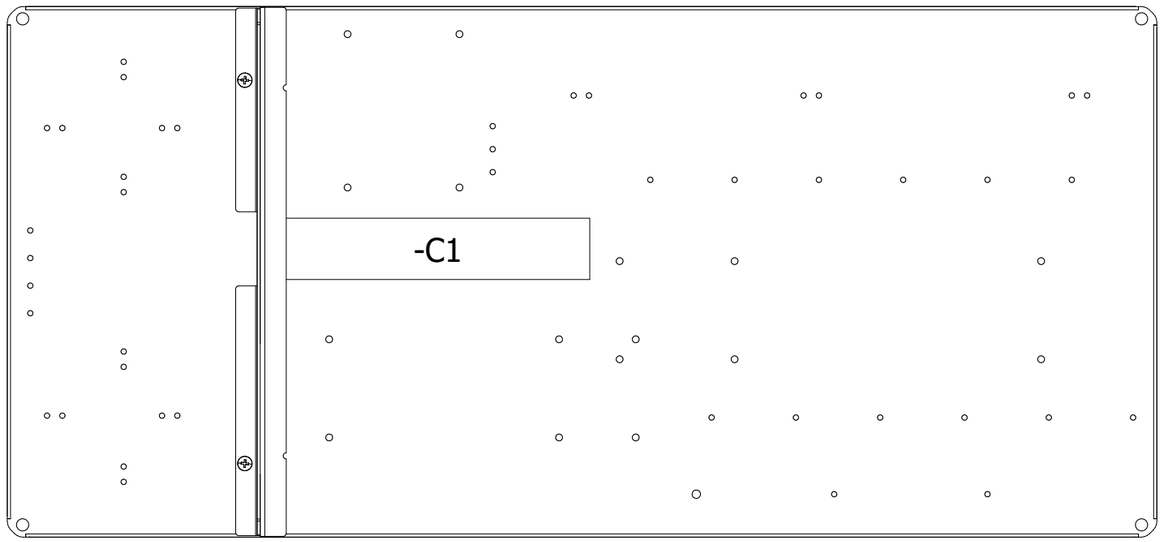

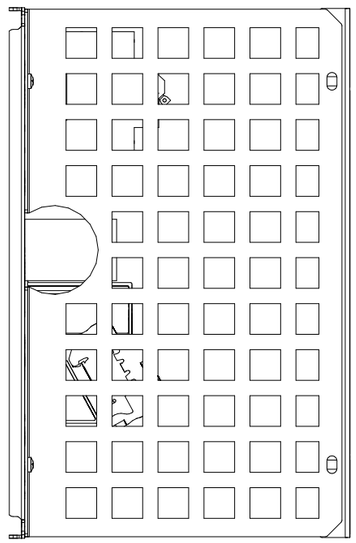

			Date	27/06/2017
			Elab.	Filippo Gregolin
Modification	Date	Name		

CMAL0ME001

EP 4 FANS ALFA LU-VE DOUBLE GROUP WITH BOX STANDARD

Channels view

Mounting locations +

Function =

Page /9

Next 10

Total pages 33

Cable entry/exit components

Item number	Component tipe	Drilling (Tollerance +-0.5mm)
1	M32 Gland	Ø 32.5mm
2	Multi-cable gland	

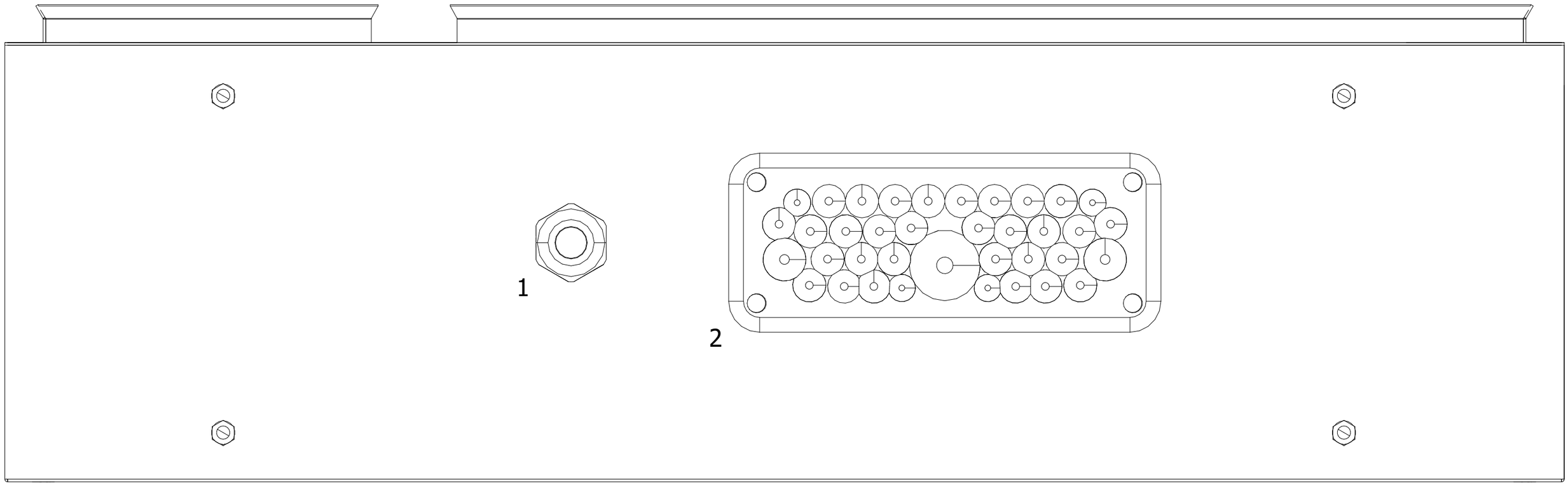

			Date	27/06/2017	CMAL0ME001	ALFA LU-VE	Bottom view	Mounting locations +	Page /10
			Elab.	Filippo Gregolin	EP 4 FANS ALFA LU-VE DOUBLE GROUP WITH BOX STANDARD			Function =	Next +QE/1
Modification	Date	Name							Total pages 33

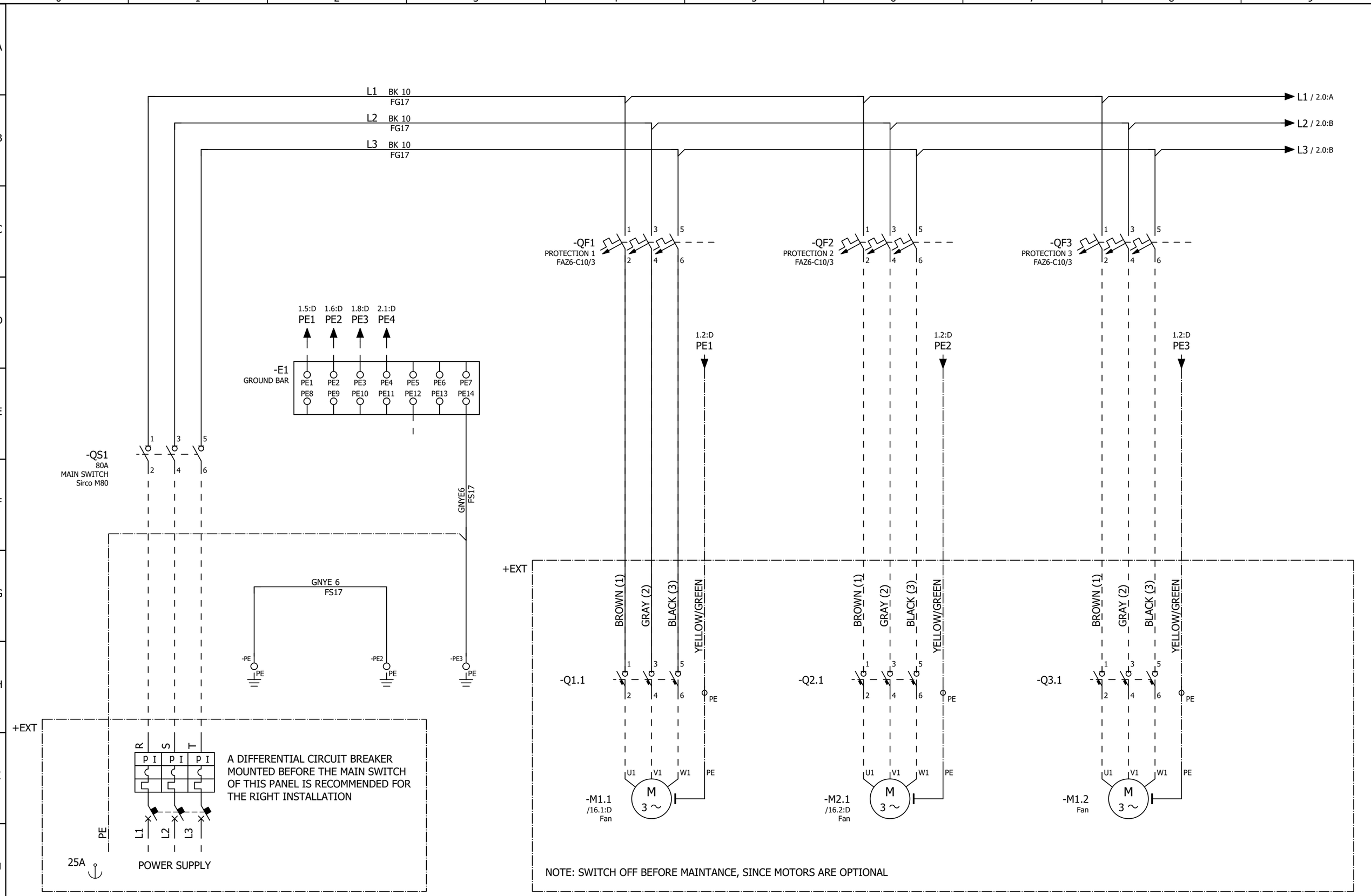

			Date	27/06/2017
			Elab.	Filippo Gregolin
Modification	Date	Name		

CMAL0ME001

EP 4 FANS ALFA LU-VE DOUBLE GROUP WITH BOX STANDARD

ALFA LU-VE

Power circuit

Mounting locations + QE

Function =

Page +QE/1

Next 2

Total pages 33

			Date	27/06/2017
			Elab.	Filippo Gregolin
Modification	Date	Name		

CMAL0ME001

EP 4 FANS ALFA LU-VE DOUBLE GROUP WITH BOX STANDARD

Power circuit

Mounting locations + QE

Function =

Page +QE/2

Next 4

Total pages 33

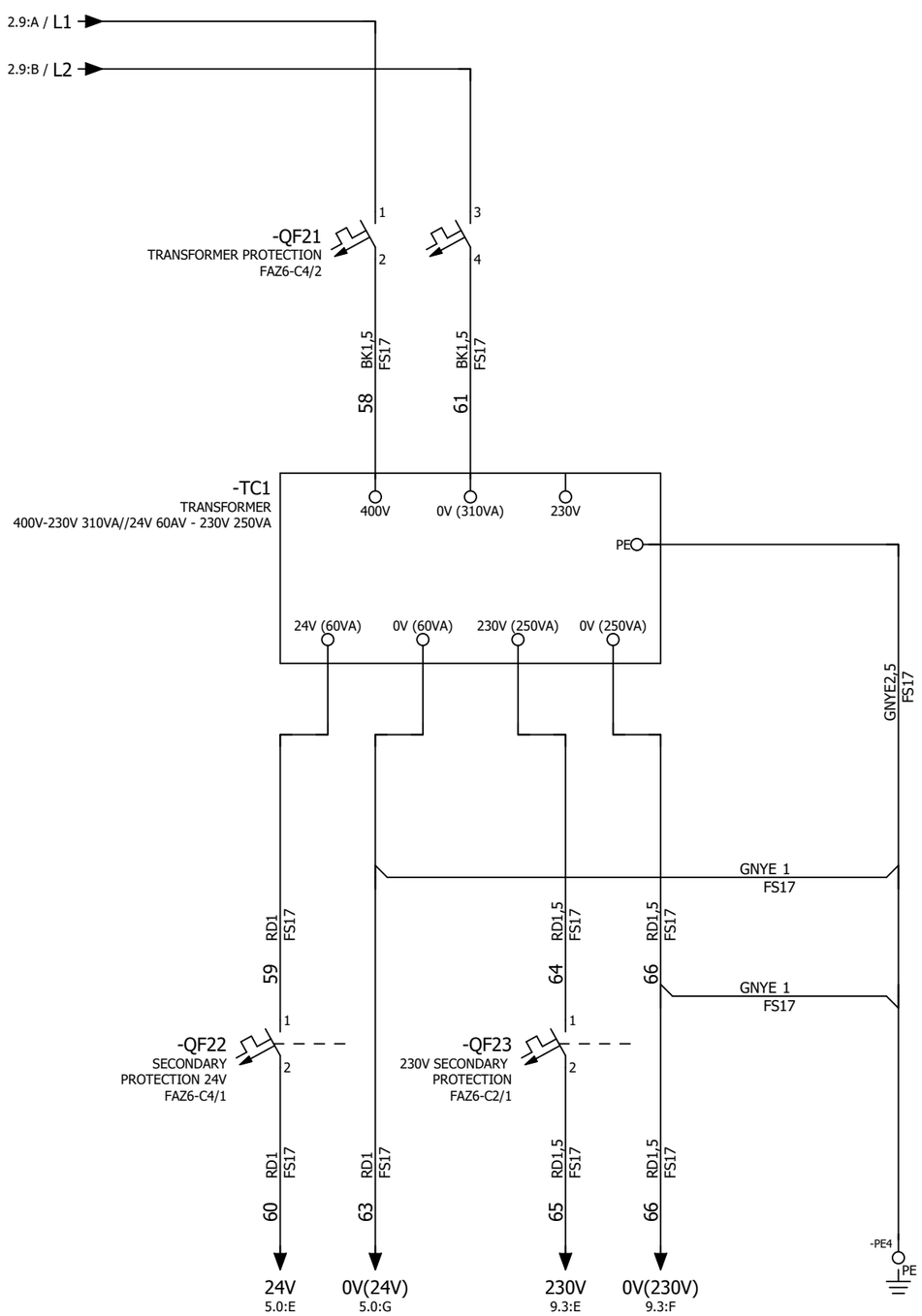

			Date	27/06/2017
			Elab.	Filippo Gregolin
Modification	Date	Name		

CMAL0ME001

EP 4 FANS ALFA LU-VE DOUBLE GROUP WITH BOX STANDARD

ALFA LU-VE

Power circuit

Mounting locations + QE

Function =

Page +QE/4

Next 5

Total pages 33

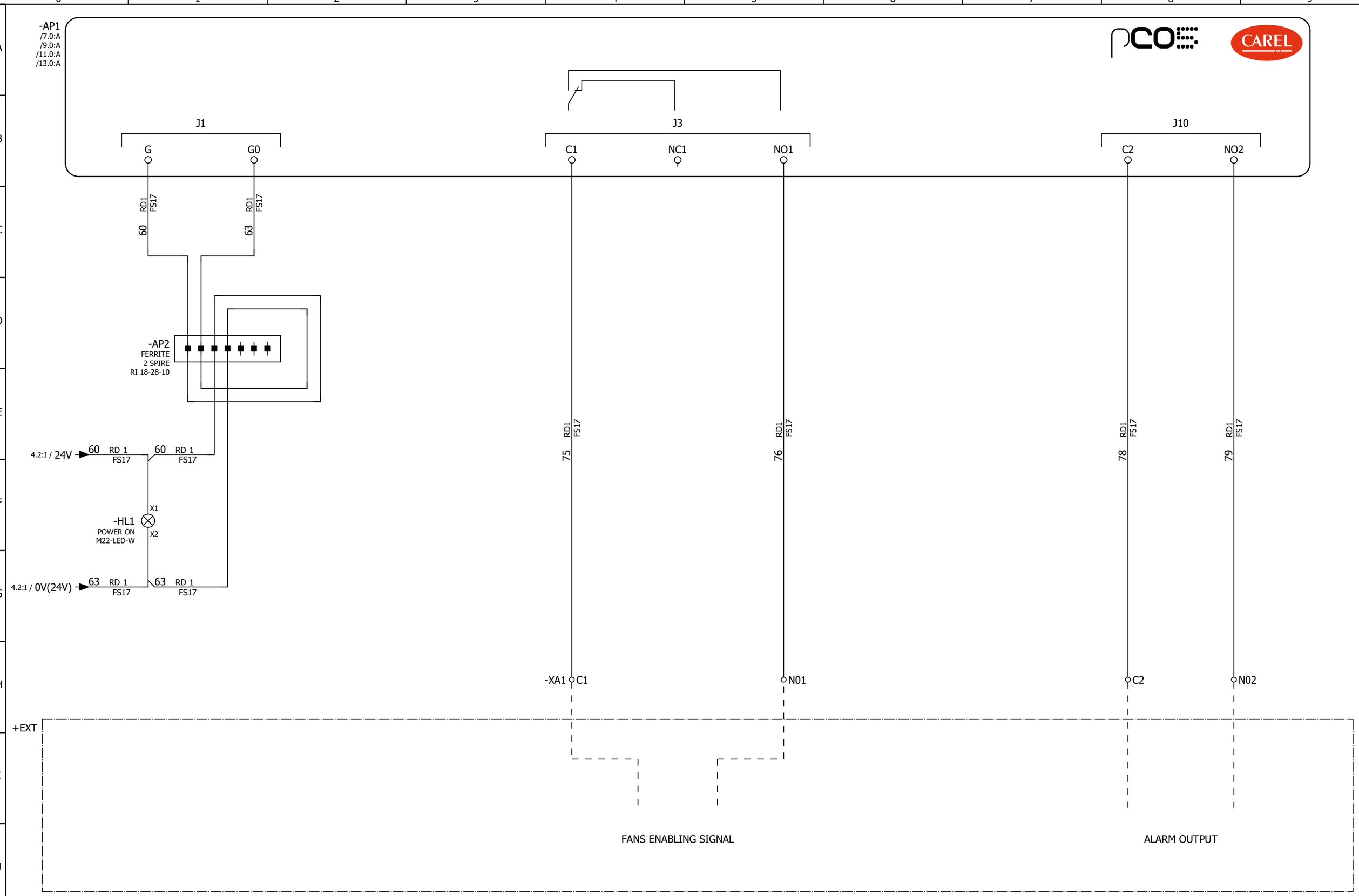

			Date	27/06/2017
			Elab.	Filippo Gregolin
Modification	Date	Name		

CMAL0ME001

EP 4 FANS ALFA LU-VE DOUBLE GROUP WITH BOX STANDARD

Auxiliary circuit

Mounting locations + QE

Function =

Page +QE/5

Next 7

Total pages 33

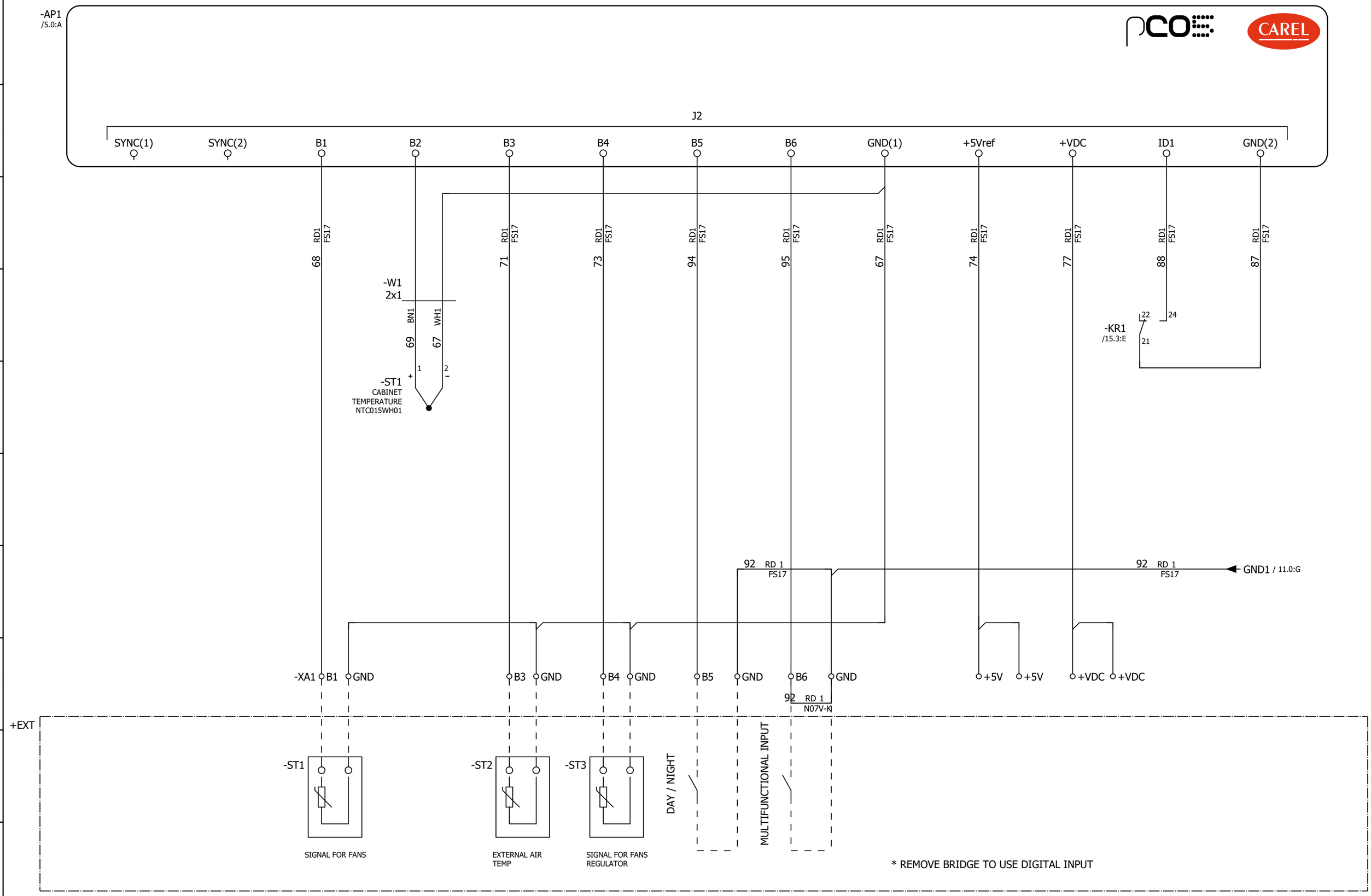

			Date	27/06/2017
			Elab.	Filippo Gregolin
Modification	Date	Name		

CMAL0ME001

EP 4 FANS ALFA LU-VE DOUBLE GROUP WITH BOX STANDARD

Auxiliary circuit

Mounting locations + QE

Function =

Page +QE/7

Next 8.a

Total pages 33

NO PT1000
B1 SIGNAL FOR FANS (NTC)
B2 E.P. TEMPERATURE (NTC)
B3 EXTERNAL AIR TEMPERATURE (NTC)
B4 ----------

WITH PT1000
B1 ----------
B2 E.P. TEMPERATURE (NTC)
B3 EXTERNAL AIR TEMPERATURE (NTC)
B4 SIGNAL FOR FANS (PT1000)

PROBE CONNECTIONS

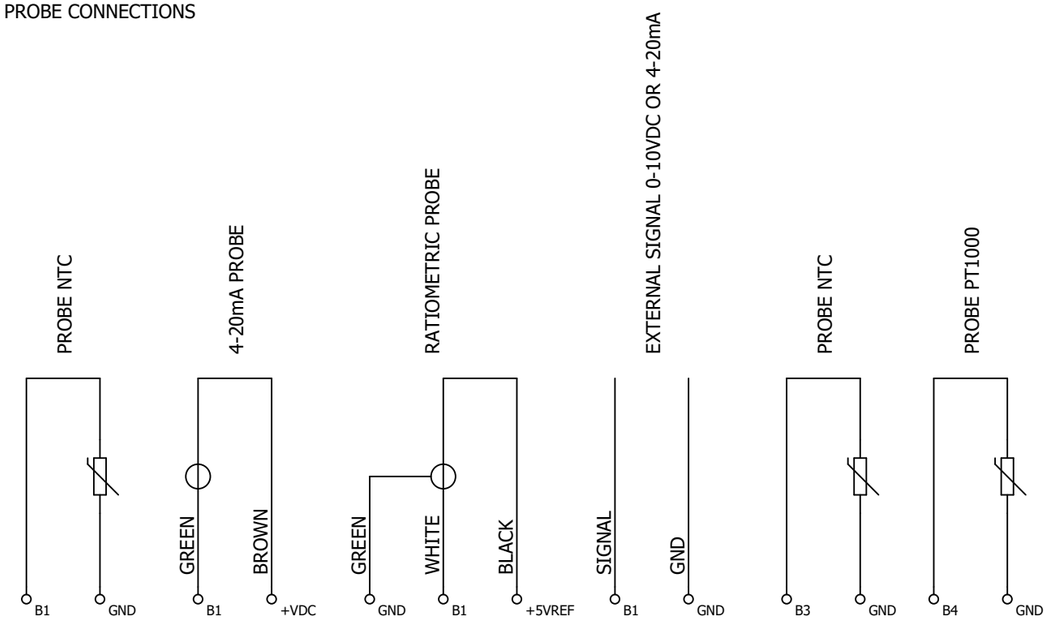

			Date	27/06/2017
			Elab.	Filippo Gregolin
Modification	Date	Name		

CMAL0ME001

EP 4 FANS ALFA LU-VE DOUBLE GROUP WITH BOX STANDARD

ALFA LU-VE

Auxiliary circuit

Mounting locations + QE

Function =

Page +QE/8.a

Next 9

Total pages 33

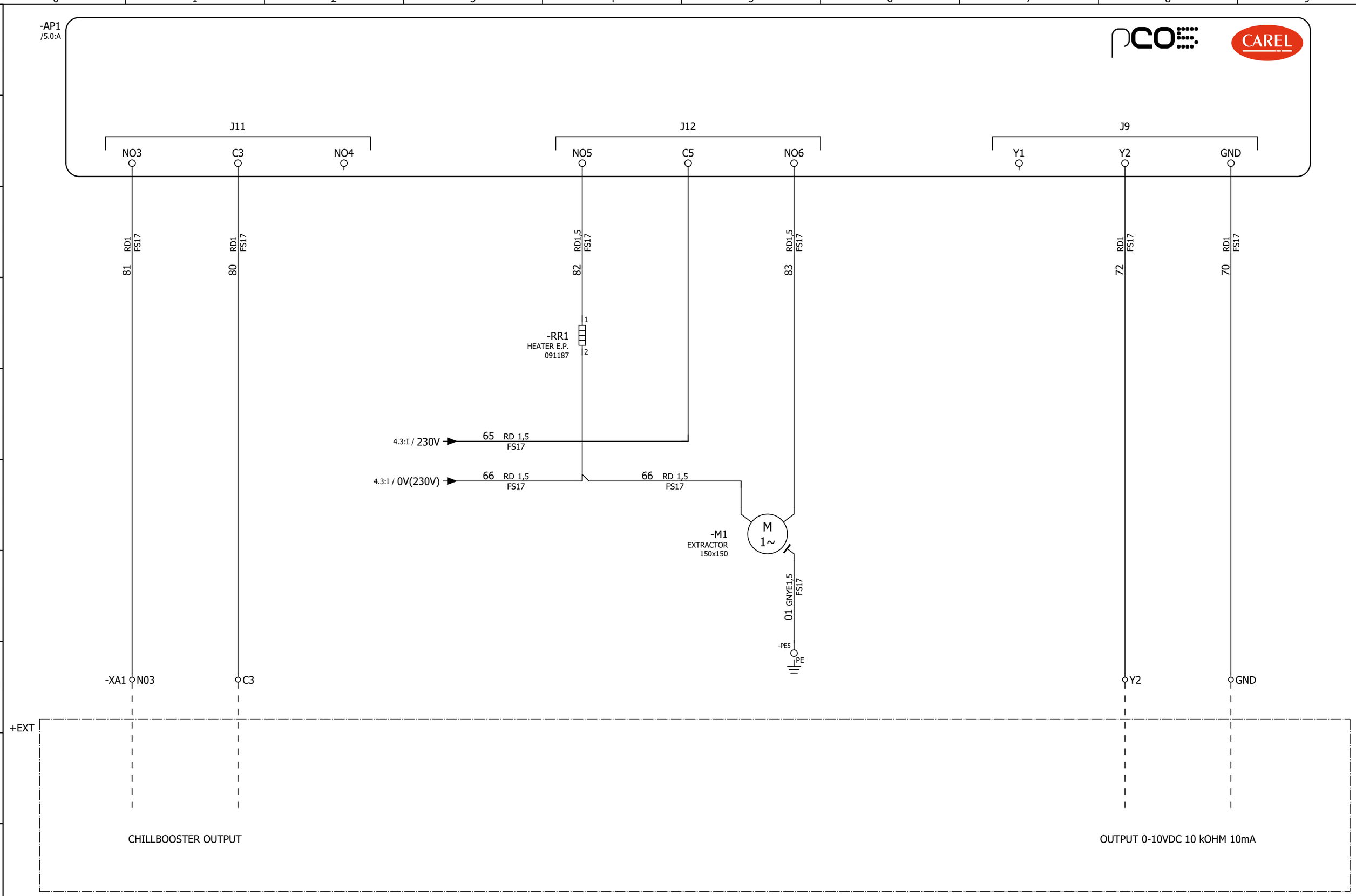

			Date	27/06/2017
			Elab.	Filippo Gregolin
Modification	Date	Name		

CMAL0ME001

EP 4 FANS ALFA LU-VE DOUBLE GROUP WITH BOX STANDARD

ALFA LU-VE

Auxiliary circuit

Mounting locations	+ QE
Function	=
Page	+QE/9
Next	11
Total pages	33

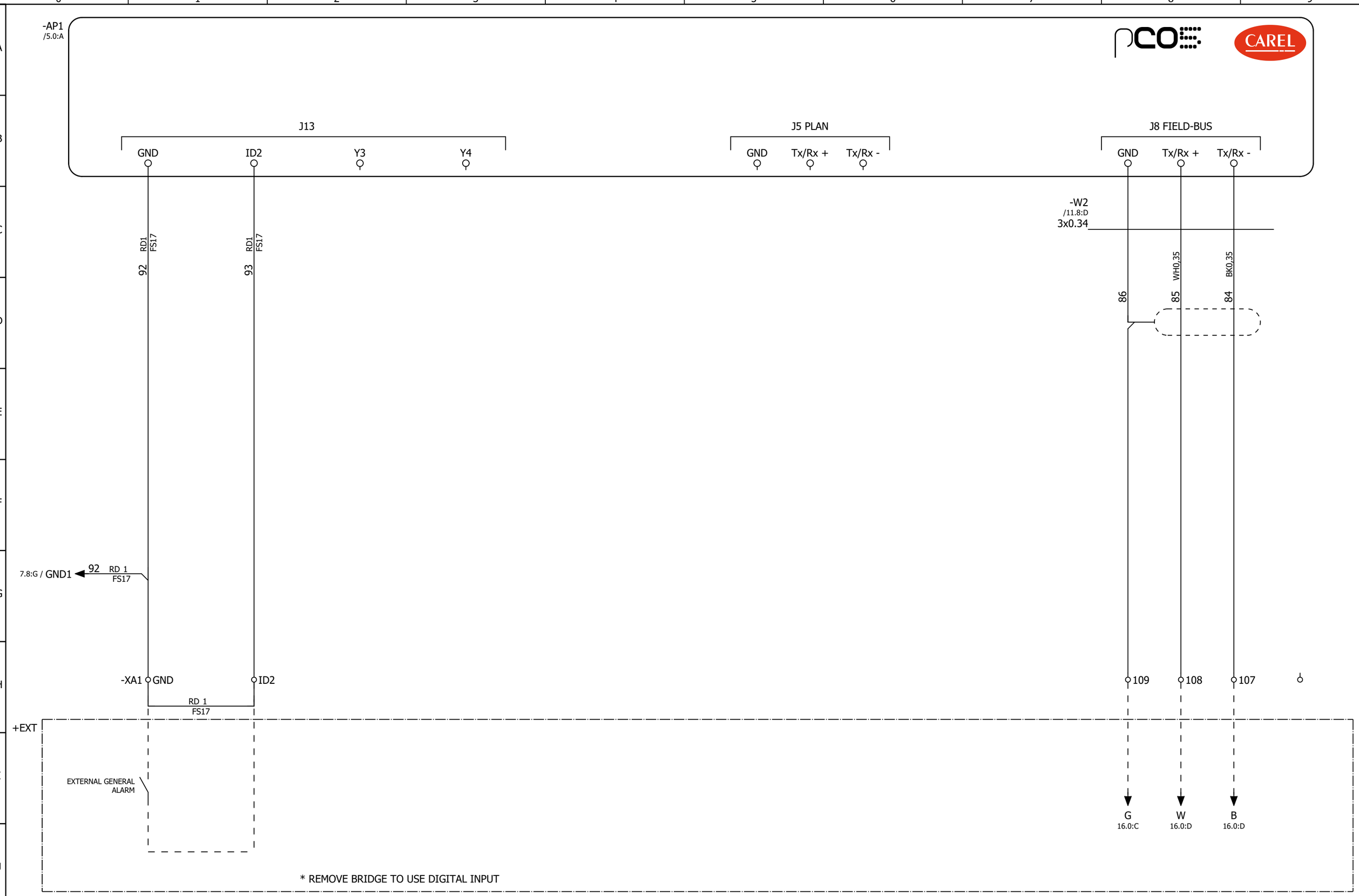

			Date	27/06/2017
			Elab.	Filippo Gregolin
Modification	Date	Name		

CMAL0ME001

EP 4 FANS ALFA LU-VE DOUBLE GROUP WITH BOX STANDARD

Auxiliary circuit

Mounting locations + QE

Function =

Page +QE/11

Next 13

Total pages 33

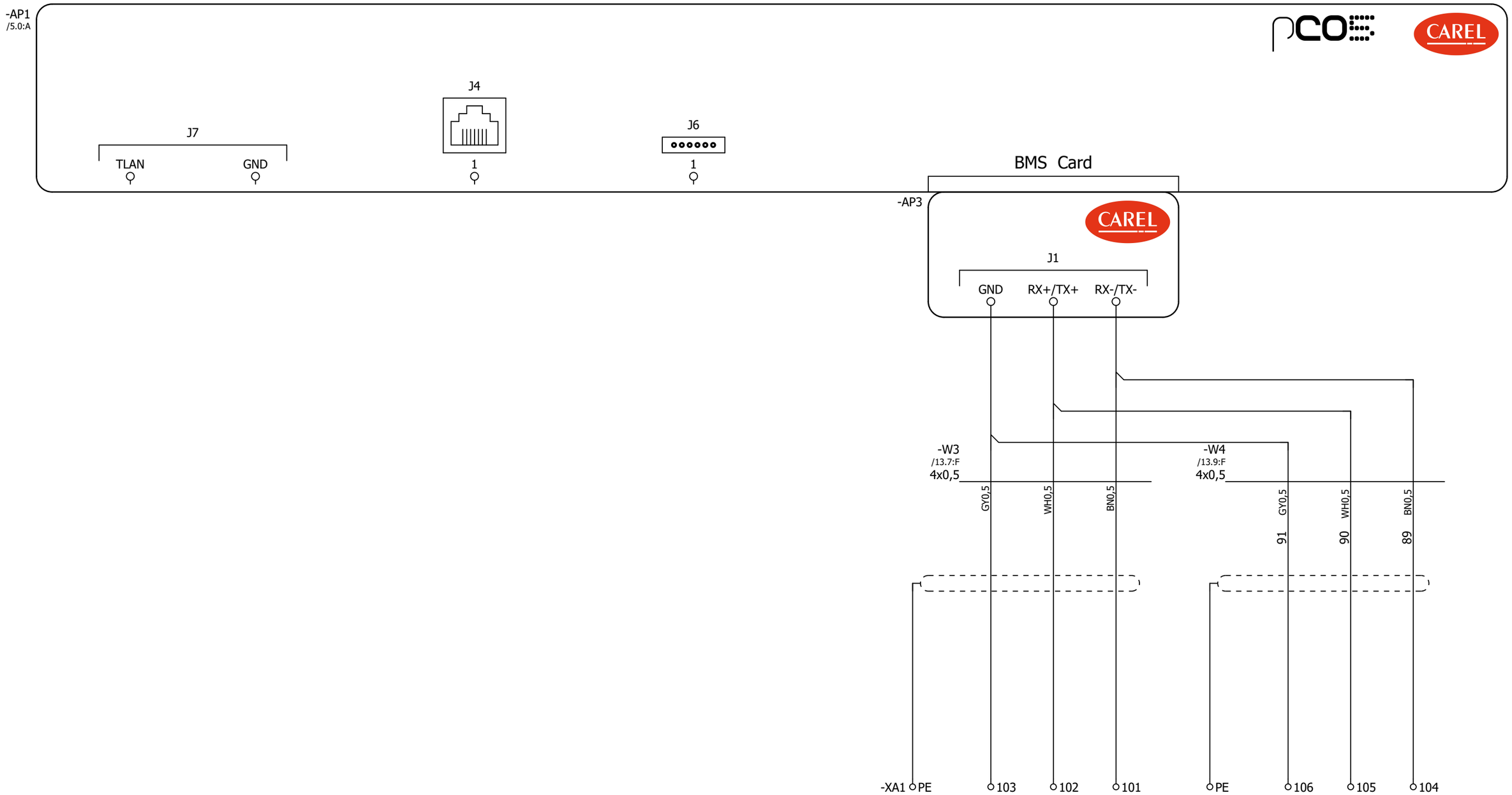

+EXT

			Date	27/06/2017
			Elab.	Filippo Gregolin
Modification	Date	Name		

CMAL0ME001

EP 4 FANS ALFA LU-VE DOUBLE GROUP WITH BOX STANDARD

Auxiliary circuit

Mounting locations + QE

Function =

Page +QE/13

Next 15

Total pages 33

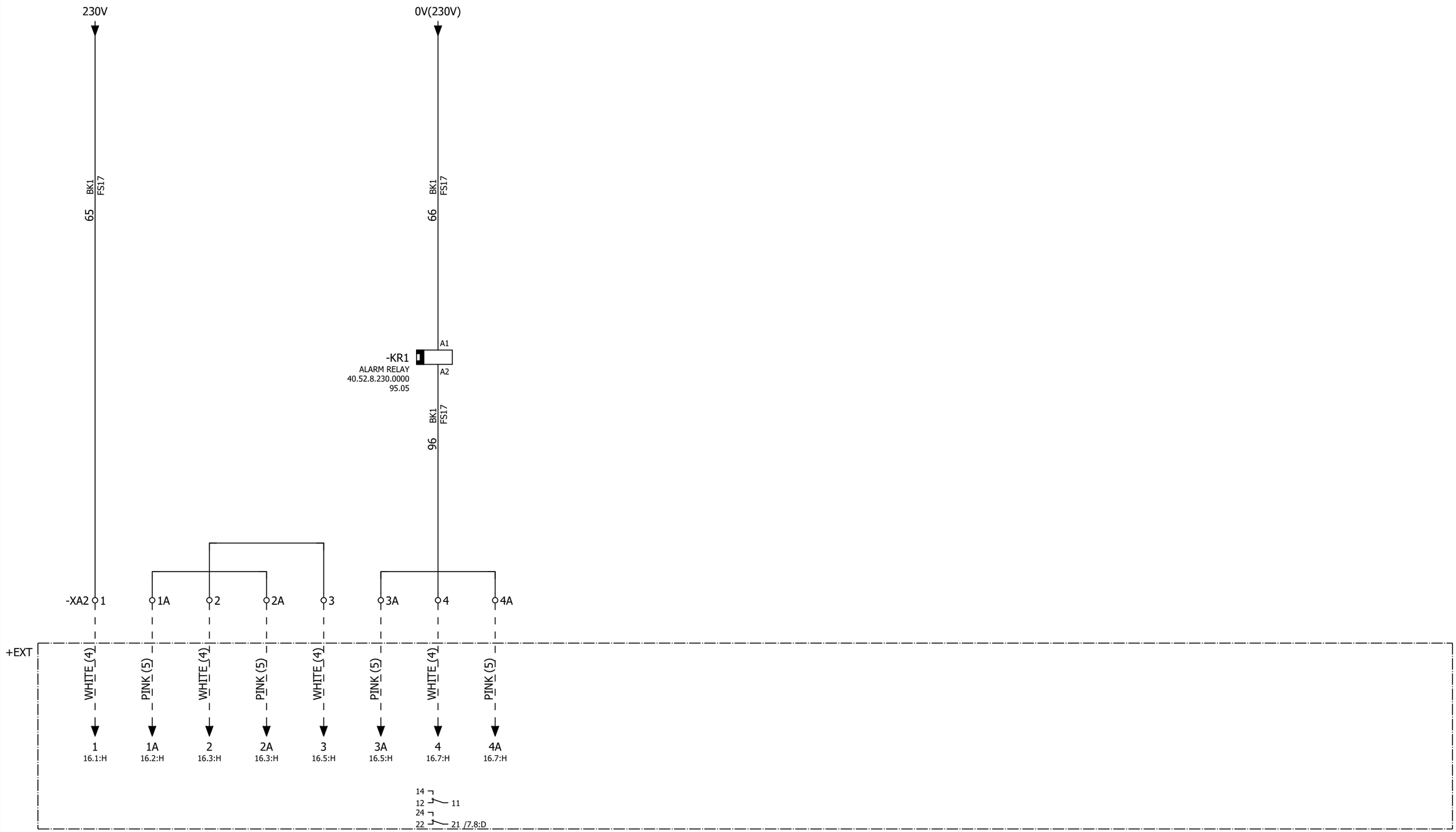

			Date	27/06/2017	CMAL0ME001	ALFA LU-VE	Auxiliary circuit	Mounting locations + QE	Page +QE/15
			Elab.	Filippo Gregolin	EP 4 FANS ALFA LU-VE DOUBLE GROUP WITH BOX STANDARD			Function =	Next 16
Modification	Date	Name							Total pages 33

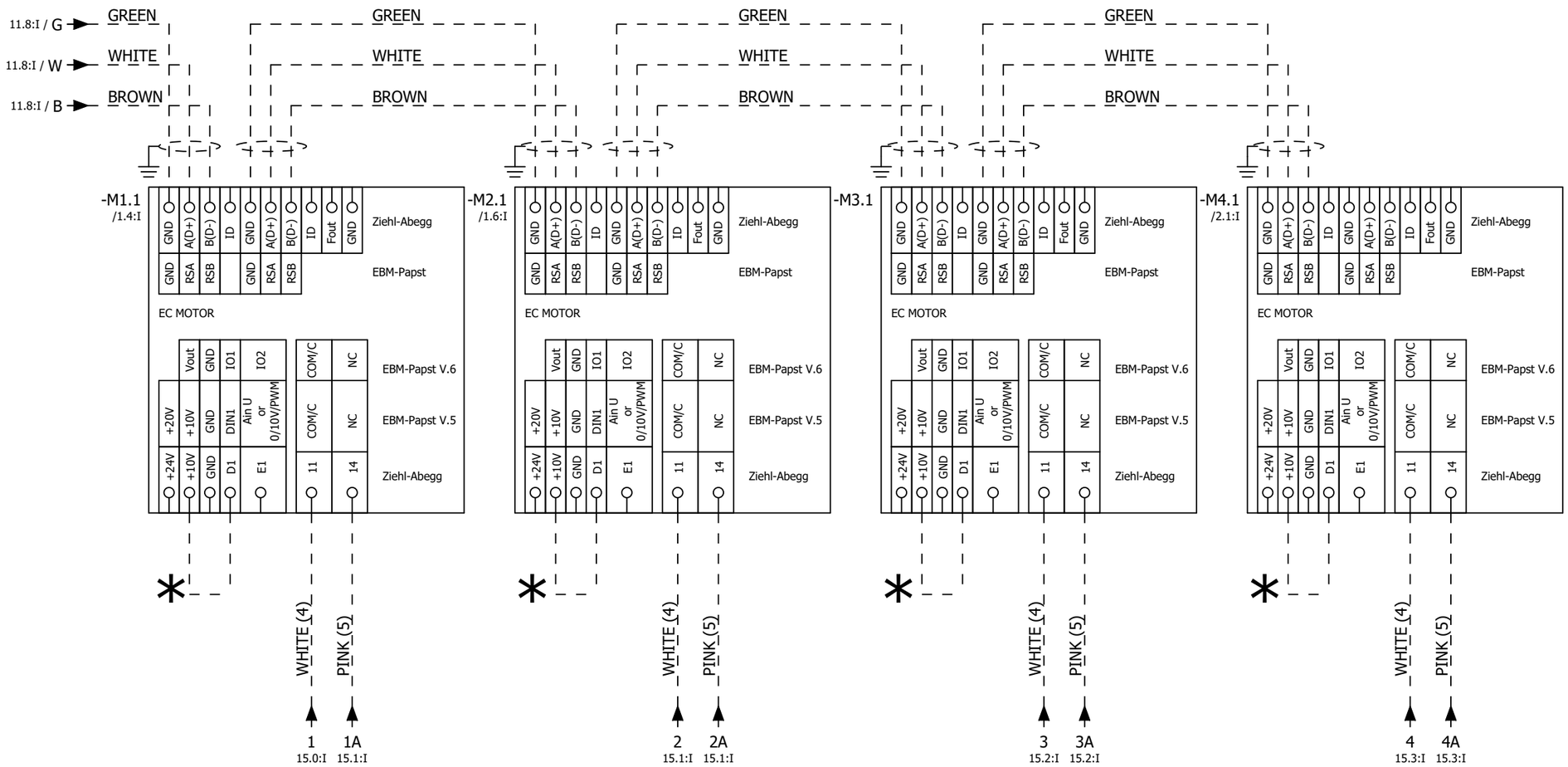

* CONNECTION NEEDED ONLY FOR ZIEHL-ABBEGG FANS

			Date	27/06/2017
			Elab.	Filippo Gregolin
Modification	Date	Name		

CMAL0ME001

EP 4 FANS ALFA LU-VE DOUBLE GROUP WITH BOX STANDARD

ALFA LU-VE

Auxiliary circuit

Mounting locations	+ QE
Function	=
Page	+QE/16
Next	18
Total pages	33

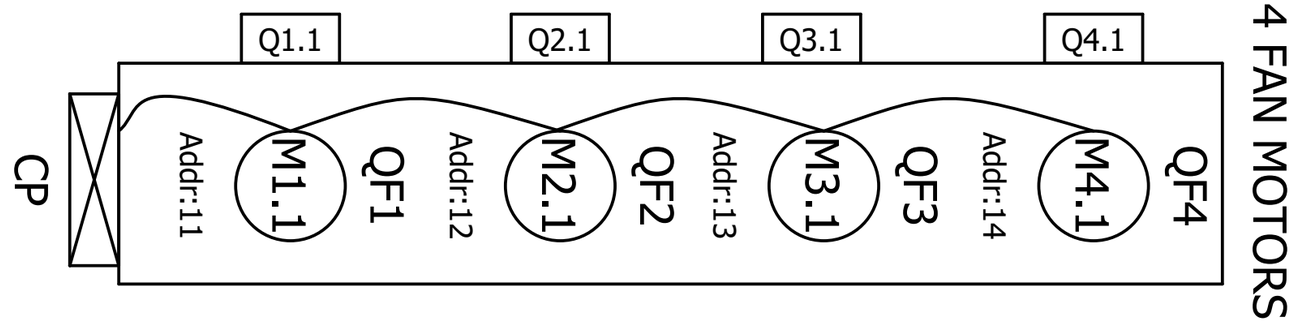

			Date	27/06/2017	CMAL0ME001	ALFA LU-VE	Serial connection	Mounting locations + QE	Page +QE/18
			Elab.	Filippo Gregolin	EP 4 FANS ALFA LU-VE DOUBLE GROUP WITH BOX STANDARD				Next 19
Modification	Date	Name						Function =	Total pages 33

CAREL INDUSTRIES S.p.A. - Società Unipersonale
Via dell'Industria, 11 - 35020 Brugine – Padova – Italia
Tel. (+39) 049.9716611 – Fax (+39) 049.9716600
www.carel.com – e-mail: carel@carel.com

Cap. Soc. € 10.000.000 i.v.
C.C.I.A.A. Padova Reg. Imp n. 4359090281
Part. IVA e Cod. Fisc. 04359090281
Società soggetta ad attività di direzione e coordinamento di Carel S.p.A.

CE

EU Declaration of Conformity

Manufacturer: **CAREL Industries S.p.A.**
Via dell'Industria, 11 35020 Brugine (PD) Italy

Electric Control Panels series Carel Power Solutions
Code :
Serial number:

CMAL0ME001 / CMAL0ME004

The manufacturer declares that all the above indicated products are in accordance with the EU Directives:

2006/95/EC (LVD)

and comply with the requirements of the following European standards:

EN 60204-1

Brugine, 27/06/2017

CAREL INDUSTRIES S.p.A.
Technical Director

Ing. Umberto Bianchini

Modification	Date	Name		Date	27/06/2017
				Elab.	Filippo Gregolin

CMAL0ME001
EP 4 FANS ALFA LU-VE DOUBLE GROUP WITH BOX STANDARD

ALFA LU-VE

Certificazione

Function	=	Mounting locations	+ QE	Page	+QE/19
				Next	=REP1+/1,0
				Total pages	33

Multicore cables scheme

Cable type PROBE CABLE

Oracle code PROBE CABLE

Total Cable Length Cut:

Departure | Cross ref. | Terminator

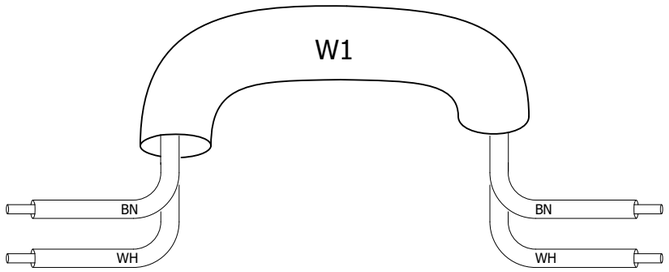

Terminator | Cross ref. | Arrival

Unsheathing cable departure

Unsheathing cable arrival

			Date	27/06/2017
			Elab.	Filippo Gregolin
Modification	Date	Name		

CMAL0ME001

EP 4 FANS ALFA LU-VE DOUBLE GROUP WITH BOX STANDARD

ALFA LU-VE

Multicore cables scheme

Mounting locations +

Function =REP1

Page =REP1/1,0

Next 1,1

Total pages 33

Multicore cables scheme

Cable type Belden

Oracle code 1008176AXX

Total Cable Length Cut:

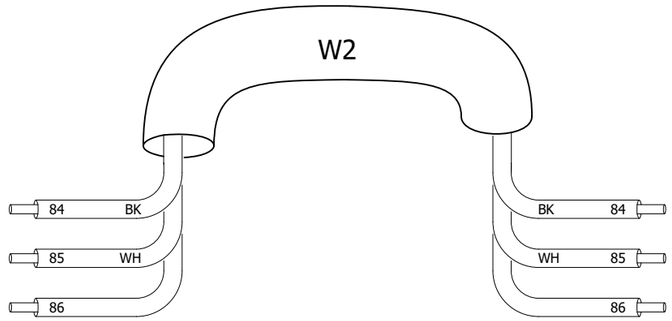

Departure	Cross ref.	Terminator	Terminator	Cross ref.	Arrival
XA1:107:A	+QE/11.8:H			+QE/11.8:B	+QE-AP1:J8 FIELD-BUS:Tx/Rx -
XA1:108:B	+QE/11.8:H			+QE/11.8:B	+QE-AP1:J8 FIELD-BUS:Tx/Rx +
XA1:109:A	+QE/11.8:H			+QE/11.8:B	+QE-AP1:J8 FIELD-BUS:GND

Unsheathing cable departure

Unsheathing cable arrival

			Date	27/06/2017
			Elab.	Filippo Gregolin
Modification	Date	Name		

CMAL0ME001

EP 4 FANS ALFA LU-VE DOUBLE GROUP WITH BOX STANDARD

ALFA LU-VE

Multicore cables scheme

Mounting locations +

Function =REP1

Page =REP1/1,1

Next 1,2

Total pages 33

Multicore cables scheme

Carel STD-V2

Cable type Shielded 3x0.5

Oracle code 1008019AXX

Total Cable Length Cut:

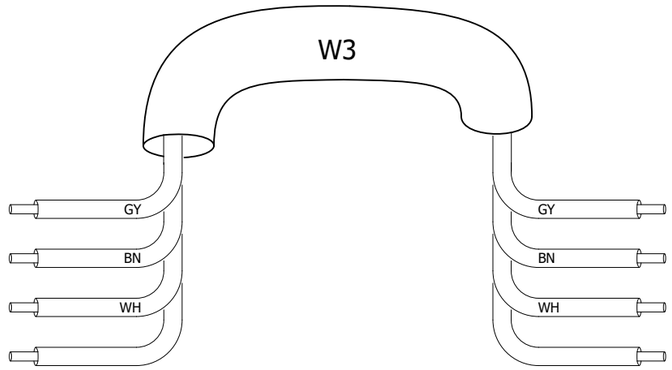

Departure	Cross ref.	Terminator	Terminator	Cross ref.	Arrival
XA1:103:A	+QE/13.6:H			+QE/13.6:C	+QE-AP3:J1:GND
XA1:101:A	+QE/13.7:H			+QE/13.7:C	+QE-AP3:J1:RX-/TX-
XA1:102:B	+QE/13.6:H			+QE/13.6:C	+QE-AP3:J1:RX+/TX+

Unsheathing cable departure

Unsheathing cable arrival

			Date	27/06/2017
			Elab.	Filippo Gregolin
Modification	Date	Name		

CMAL0ME001

EP 4 FANS ALFA LU-VE DOUBLE GROUP WITH BOX STANDARD

ALFA LU-VE

Multicore cables scheme

Mounting locations +

Function =REP1

Page =REP1/1,2

Next 1,3

Total pages 33

Multicore cables scheme

Cable type Shielded 3x0.5

Oracle code 1008019AXX

Total Cable Length Cut:

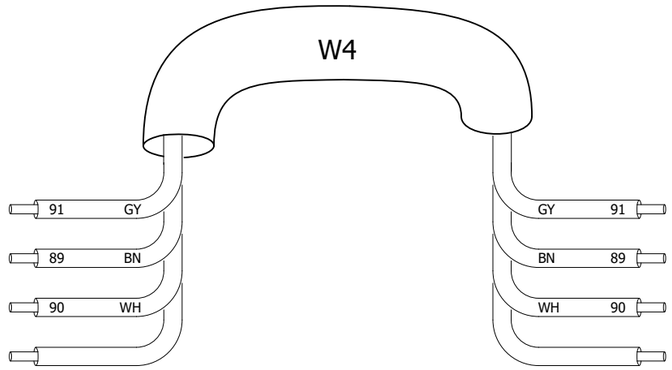

Departure	Cross ref.	Terminator	Terminator	Cross ref.	Arrival
XA1:106:A	+QE/13.8:H			+QE/13.6:C	+QE-AP3:J1:GND
XA1:104:A	+QE/13.8:H			+QE/13.7:C	+QE-AP3:J1:RX-/TX-
XA1:105:B	+QE/13.8:H			+QE/13.6:C	+QE-AP3:J1:RX+/TX+

Unsheathing cable departure

Unsheathing cable arrival

			Date	27/06/2017
			Elab.	Filippo Gregolin
Modification	Date	Name		

CMAL0ME001

EP 4 FANS ALFA LU-VE DOUBLE GROUP WITH BOX STANDARD

ALFA LU-VE

Multicore cables scheme

Mounting locations +

Function =REP1

Page =REP1/1,3

Next 2,0

Total pages 33

Terminal diagram

Terminal strip

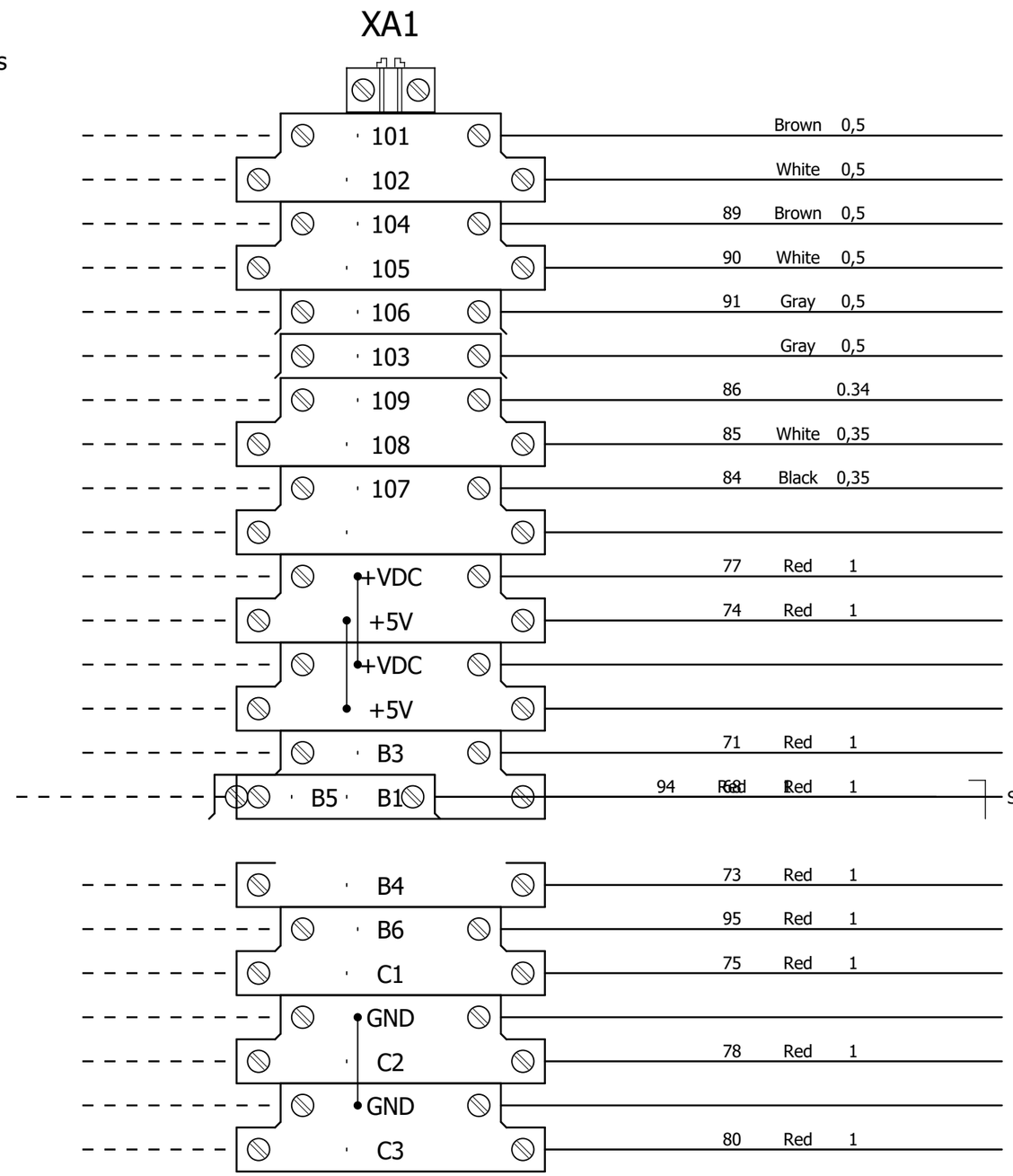

External targets	Teminal type	Terminal position on the drawings
	STTB 2,5	+QE/13.7:H
		+QE/13.6:H
	STTB 2,5	+QE/13.8:H
		+QE/13.8:H
	STTB 2,5	+QE/13.8:H
	STTB 2,5	+QE/13.6:H
	STTB 2,5	+QE/11.8:H
		+QE/11.8:H
	STTB 2,5	+QE/11.8:H
		+QE/11.9:H
	STTB 2,5	+QE/7.7:H
		+QE/7.7:H
	STTB 2,5	+QE/7.8:H
		+QE/7.7:H
	STTB 2,5	+QE/7.3:H
	STTB 2,5	+QE/7.2:H
		+QE/7.4:H
	STTB 2,5	+QE/7.5:H
		+QE/5.4:H
	STTB 2,5	+QE/7.2:H
		+QE/5.8:H
	STTB 2,5	+QE/7.3:H
		+QE/9.1:H

Terminal diagram

Terminal strip

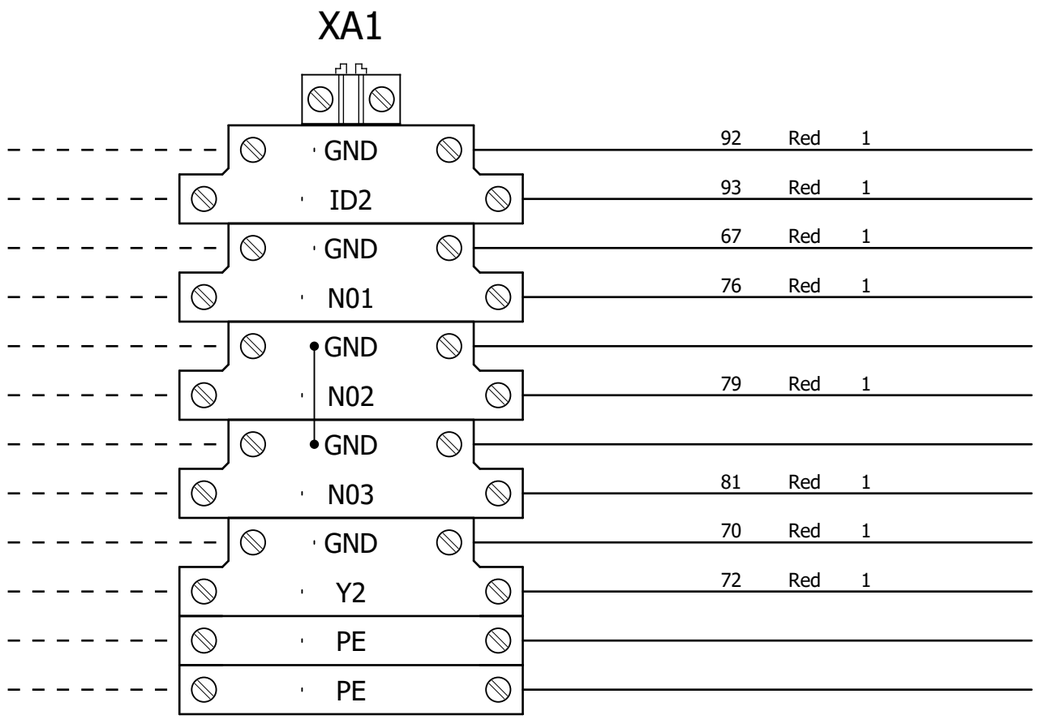

External targets	Teminal type	Terminal position on the drawings
	STTB 2,5	+QE/11.1:H
		+QE/11.1:H
	STTB 2,5	+QE/7.4:H
		+QE/5.5:H
	STTB 2,5	+QE/7.5:H
		+QE/5.8:H
	STTB 2,5	+QE/7.6:H
		+QE/9.1:H
	STTB 2,5	+QE/9.8:H
		+QE/9.8:H
		+QE/13.5:H
		+QE/13.7:H

Terminal diagram

Terminal strip

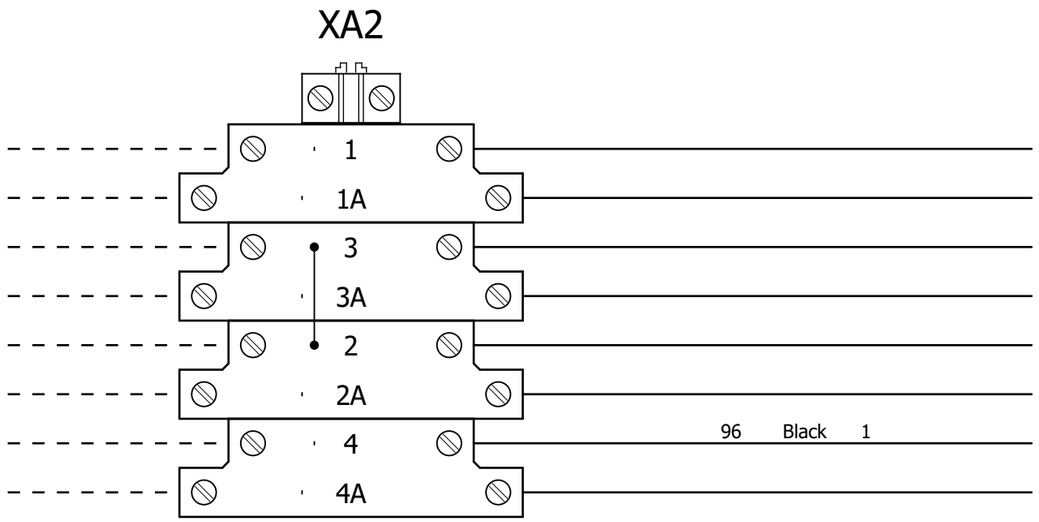

External targets	Teminal type	Terminal position on the drawings
	STTB 2,5	+QE/15.0:H
		+QE/15.1:H
	STTB 2,5	+QE/15.2:H
		+QE/15.2:H
	STTB 2,5	+QE/15.1:H
		+QE/15.1:H
	STTB 2,5	+QE/15.3:H
		+QE/15.3:H

BOM internal panel

InternoQE_F01_003

Short name	Designation	Function text	Position	Manufacturer	Component tipe	Oracle code
AP1	Programmable control		=+QE/5.0:A	CAREL	PCO Compact	PCOXLV0DB0
AP2	Damping magnet, M 5.0	FERRITE 2 SPIRE	=+QE/5.1:D	KE-KITAGAWA	FERRITE CORE	0907877AXX
AP3	Scheda seriale BMS		=+QE/13.6:B	CAREL	Scheda seriale BMS	PCOS004850
E1	Earth terminal	GROUND BAR	=+QE/1.2:D	SCHNEIDER ELECTRIC	14977	2217096CEL
HL1	White lamp 24Vac	POWER ON	=+QE/5.1:F	EATON ELECTRIC	M22-LED-W	0505103CEL
HL1	Plate	=	=+QE/5.1:F	CEMBRE	15X27	1800243AXX
HL1	Support plate	=	=+QE/5.1:F	CEMBRE	D22 17X30	1800242AXX
HL1	Glass plate	=	=+QE/5.1:F	CEMBRE	15X27	1800244AXX
HL1	Support	=	=+QE/5.1:F	EATON ELECTRIC	M22-A	0505184AXX
HL1	White indicator plate	=	=+QE/5.1:F	EATON ELECTRIC	216771	0505111CEL
KR1	Relay	ALARM RELAY	=+QE/15.3:E	FINDER	40.52.8.230.0000	0100751CEL
KR1	Base element	=	=+QE/15.3:E	FINDER	95.05	5931384AXX
M1	Internal fan	EXTRACTOR	=+QE/9.5:F	EZM	150x150	1312697AXX
PE	GROUND		=+QE/1.1:H		PE	PE
PE2	GROUND		=+QE/1.2:H		PE	PE
PE3	GROUND		=+QE/1.3:H		PE	PE
PE4	GROUND		=+QE/4.4:H		PE	PE
PE5	GROUND		=+QE/9.5:G		PE	PE
QF1	Power circuit breaker	PROTECTION 1	=+QE/1.4:C	EATON ELECTRIC	FAZ6-C10/3	0403856CEL
QF2	Power circuit breaker	PROTECTION 2	=+QE/1.6:C	EATON ELECTRIC	FAZ6-C10/3	0403856CEL
QF3	Power circuit breaker	PROTECTION 3	=+QE/1.8:C	EATON ELECTRIC	FAZ6-C10/3	0403856CEL
QF4	Power circuit breaker	PROTECTION 4	=+QE/2.1:C	EATON ELECTRIC	FAZ6-C10/3	0403856CEL
QF21	Power circuit breaker	TRANSFORMER PROTECTION	=+QE/4.2:B	EATON ELECTRIC	FAZ6-C4/2	0403468AXX

BOM internal panel

InternoQE_F01_003

Short name	Designation	Function text	Position	Manufacturer	Component tipe	Oracle code
QF22	Power circuit breaker	SECONDARY PROTECTION 24V	=+QE/4.2:G	EATON ELECTRIC	FAZ6-C4/1	0403824AXX
QF23	Power circuit breaker	230V SECONDARY PROTECTION	=+QE/4.3:G	EATON ELECTRIC	FAZ6-C2/1	0403819AXX
QS1	Disconnect switch	MAIN SWITCH	=+QE/1.1:E	SOCOMEC	Sirco M80	0402331AXX
QS1	Operation	=	=+QE/1.1:E	SOCOMEC	Y/R 16-80A	0402333AXX
RR1	Scaldiglia 200W 230V	HEATER E.P.	=+QE/9.4:D	EZM	091187	5729759AXX
ST1	SENSOR NTC WH IP68 -50T105 CABLE 1,5M	CABINET TEMPERATURE	=+QE/7.3:E	CAREL	NTC015WH01	NTC015WH01
TC1	TRANSFORMER	TRANSFORMER	=+QE/4.2:D		400V-230V 310VA//24V 60AV - 230V 250VA	0910244AXX

BOM external panel

EsternoQE_F01_003

Place	Short name	Function text	Position	Technical characteristics
+EXT	M1.1	Fan	=+QE/1.4:I	
+EXT	M1.2	=	=+QE/1.8:I	
+EXT	M2.1	=	=+QE/1.6:I	
+EXT	M4.1	=	=+QE/2.1:I	
+EXT	ST1	SIGNAL FOR FANS	=+QE/7.2:I	
+EXT	ST2	EXTERNAL AIR TEMP	=+QE/7.3:I	
+EXT	ST3	SIGNAL FOR FANS REGULATOR	=+QE/7.4:I	

alfa.luvegroup.com

Product code	CMAL0ME002	Rev	2
Project description	EP 6 FANS ALFA LU-VE DOUBLE GROUP WITH BOX STANDARD		

Supply voltage	3P+N+E - 400V - 50Hz	Operating temperature	40°C
Rated current	39A Icc 6KA		
Auxiliary voltage	24Vac/230Vac		

Designed by	Filippo Gregolin	on	27/06/2017
Checked by	Franco Meneghetti	on	27/03/2017
Approved by	Andrea Bacchin	on	27/06/2017

NOT ALLOWED DELIVER TO THIRD PARTIES OR REPRODUCE THIS DOCUMENT NOT USE THE CONTENT OR OTHERWISE MAKE KNOWN TO THIRD PARTIES WITHOUT OUR EXPRESS PERMISSION. ANY INFRINGEMENT WILL RESULT IN DAMAGES SUFFERED. And it MADE SUBJECT TO ALL RIGHTS UNDER PATENTS OR MODELS

Cables Range

Cross-sect	N07V-K Range (A)	N07G9 Range (A)
0,5	\	NOT AVAILABLE
0,75	\	NOT AVAILABLE
1	8A	12A
1,5	11A	16A
2,5	15A	22.4A
4	20A	29.6A
6	26A	38.4A
10	36A	52.8A
16	48A	70.4A
25	64A	93.6A
35	80A	115.2A
50	95A	140A
95	150A	177.6A
120	170A	215.2A
150	195A	NOT AVAILABLE
185	220A	NOT AVAILABLE
240	260A	NOT AVAILABLE
300	300A	NOT AVAILABLE

Colors Table

Colors	Short name
Red	RD
Black	BK
Yellow	YE
Yellow\Green	GNYE
Orange	OG
Light blue	TQ
Blue	BU
Pink	PK
White	WH
Gray	GY
Brown	BN
Green	GN
Purple	VT
\	
\	
\	
\	

REVIEW TABLE

Rev.	Technical name	Date	Note
01	Meneghetti F.	31/10/2018	- -
02	Quaggia L.	30/01/2020	- -

Table of contents

F06_003

Page	Page type	Page description	Date	Edited by
/1	Title page / cover sheet	Title page	30/01/2020	Luca Quaggia
/2	Pre-planning	Technical information	30/01/2020	Luca Quaggia
/3	Table of contents	Table of contents	31/01/2020	Luca Quaggia
/4	Model view	General view	31/01/2020	Luca Quaggia
/5	Model view	View of all sides	31/01/2020	Luca Quaggia
/6	Model view	Mounting plate view	31/01/2020	Luca Quaggia
/7	Model view	Door view	31/01/2020	Luca Quaggia
/8	Model view	Guides view	31/01/2020	Luca Quaggia
/9	Model view	Channels view	31/01/2020	Luca Quaggia
/10	Model view	Bottom view	31/01/2020	Luca Quaggia
+QE/1	Schematic multi-line	Power circuit	30/01/2020	Luca Quaggia
+QE/2	Schematic multi-line	Power circuit	30/01/2020	Luca Quaggia
+QE/3	Schematic multi-line	Power circuit	30/01/2020	Luca Quaggia
+QE/4	Schematic multi-line	Auxiliary circuit	30/01/2020	Luca Quaggia
+QE/5	Schematic multi-line	Auxiliary circuit	30/01/2020	Luca Quaggia
+QE/5.a	Schematic multi-line	Auxiliary circuit	30/01/2020	Luca Quaggia
+QE/6	Schematic multi-line	Auxiliary circuit	30/01/2020	Luca Quaggia
+QE/7	Schematic multi-line	Auxiliary circuit	30/01/2020	Luca Quaggia
+QE/8	Schematic multi-line	Auxiliary circuit	30/01/2020	Luca Quaggia
+QE/9	Schematic multi-line	Auxiliary circuit	30/01/2020	Luca Quaggia
+QE/10	Schematic multi-line	Auxiliary circuit	30/01/2020	Luca Quaggia
+QE/11	Schematic multi-line	Auxiliary circuit	30/01/2020	Luca Quaggia
+QE/12	Graphic	Serial connection	30/01/2020	Luca Quaggia
+QE/13	Graphic	Serial connection	30/01/2020	Luca Quaggia
=REP1/1,0	Cable diagram	Multicore cables scheme	30/01/2020	Luca Quaggia
=REP1/1,1	Cable diagram	Multicore cables scheme	30/01/2020	Luca Quaggia
=REP1/1,2	Cable diagram	Multicore cables scheme	30/01/2020	Luca Quaggia
=REP1/1,3	Cable diagram	Multicore cables scheme	30/01/2020	Luca Quaggia
=REP1/2,0	Terminal diagram	Terminal strip	30/01/2020	Luca Quaggia
=REP1/2,0.a	Terminal diagram	Terminal strip	30/01/2020	Luca Quaggia
=REP1/2,1	Terminal diagram	Terminal strip	30/01/2020	Luca Quaggia
=REP1/3,0	Parts list	BOM internal panel	30/01/2020	Luca Quaggia
=REP1/3,0.a	Parts list	BOM internal panel	30/01/2020	Luca Quaggia
=REP1/4,0	Parts list	BOM external panel	30/01/2020	Luca Quaggia

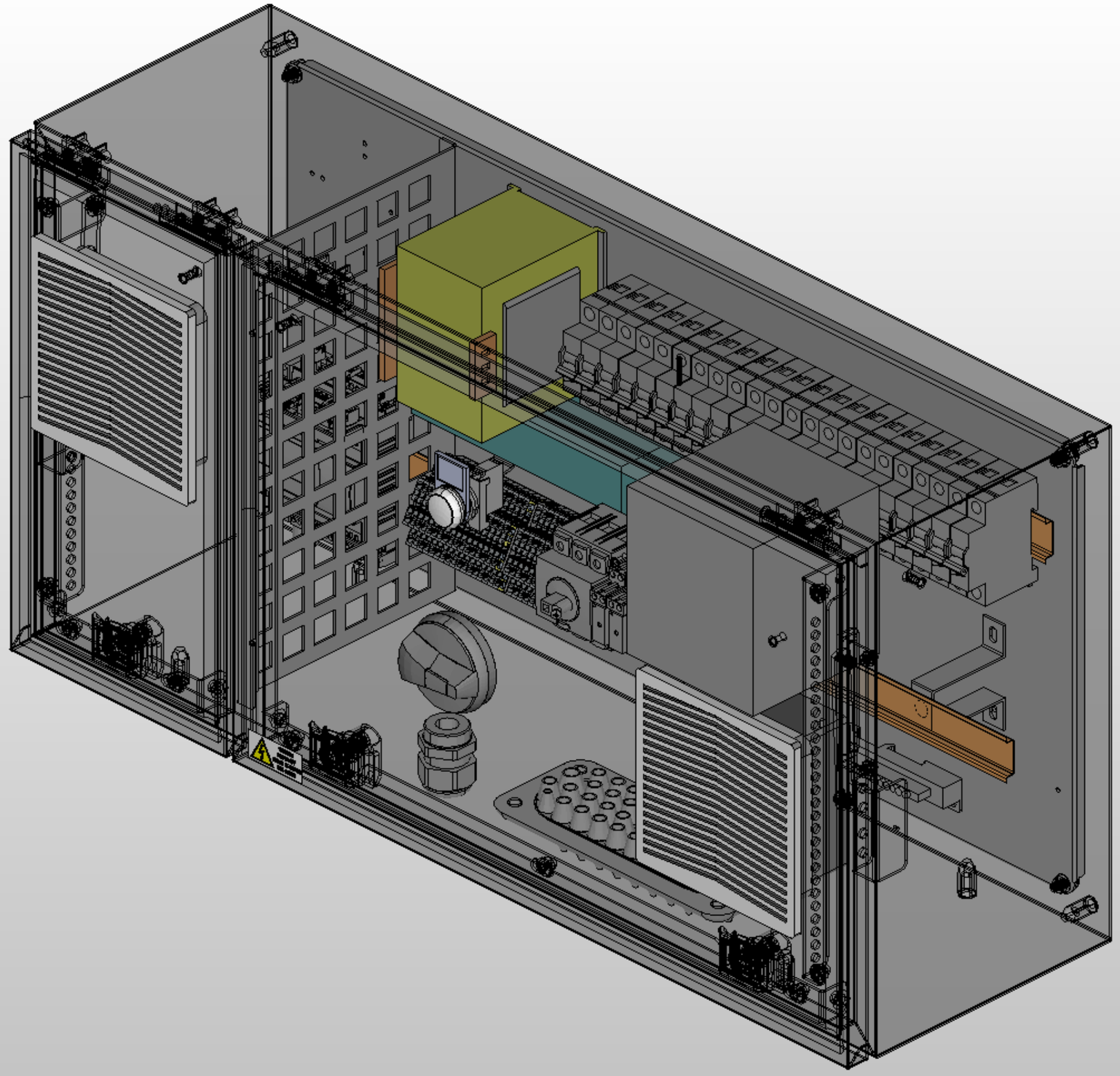

			Date	27/06/2017	CMAL0ME002	ALFA LU-VE	General view	Mounting locations +	Page /4
			Elab.	Filippo Gregolin	EP 6 FANS ALFA LU-VE DOUBLE GROUP WITH BOX STANDARD			Function =	Next 5
Modification	Date	Name							Total pages 34

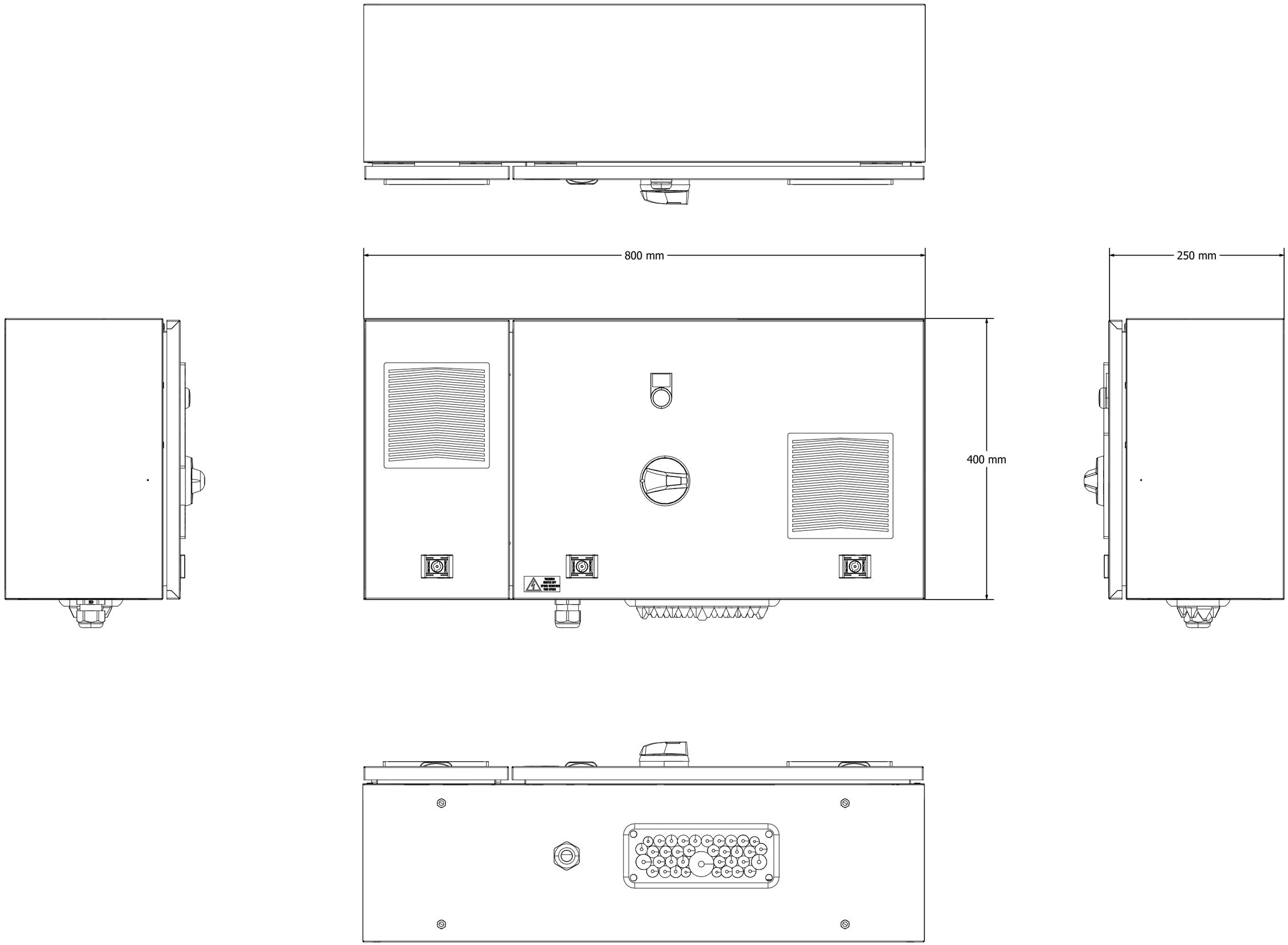

			Date	27/06/2017	CMAL0ME002	ALFA LU-VE	View of all sides	Mounting locations +	Page /5
			Elab.	Filippo Gregolin	EP 6 FANS ALFA LU-VE DOUBLE GROUP WITH BOX STANDARD				Next 6
Modification	Date	Name						Function =	Total pages 34

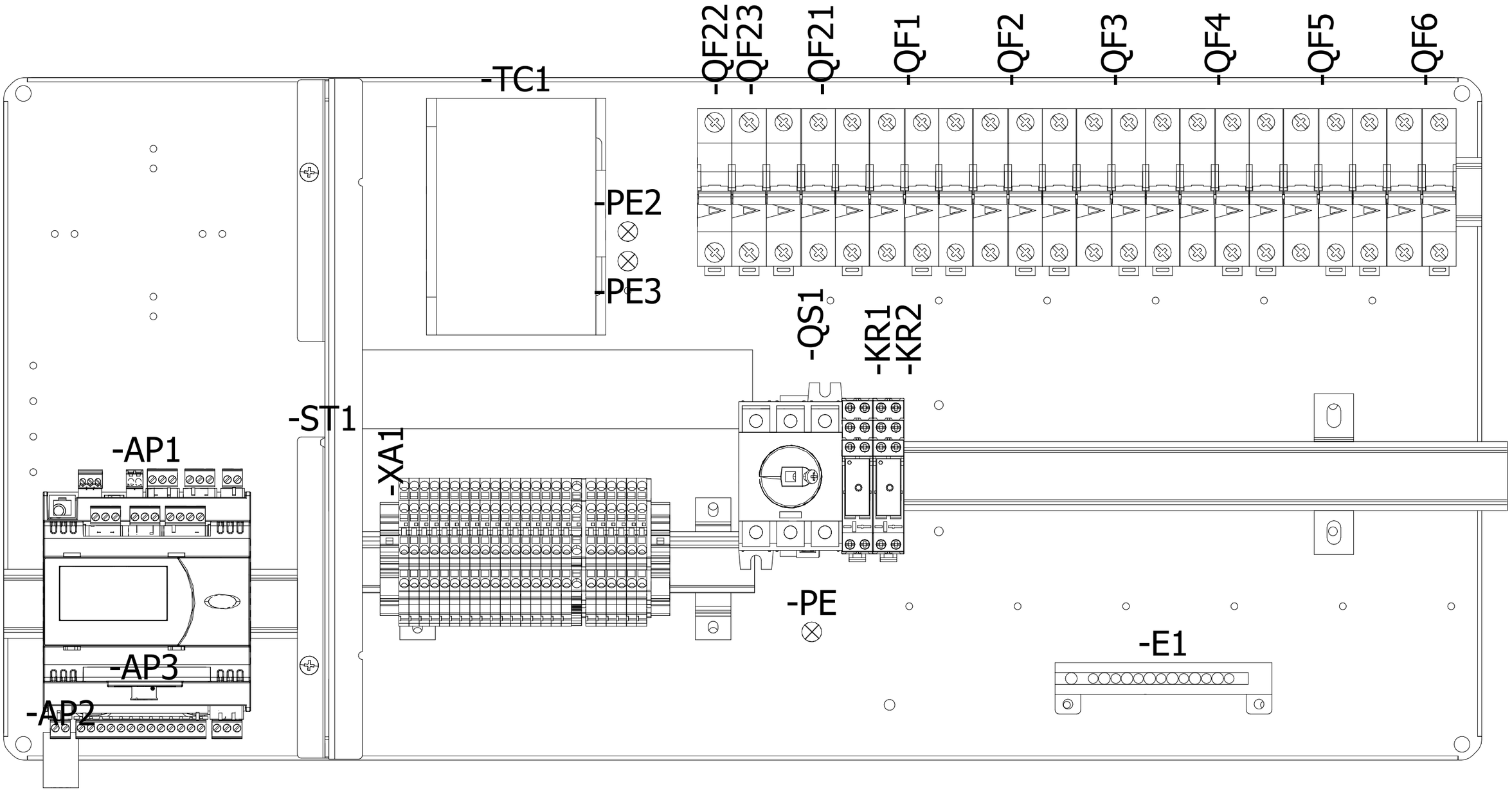

			Date	27/06/2017	CMAL0ME002	ALFA LU-VE	Mounting plate view	Mounting locations +	Page /6
			Elab.	Filippo Gregolin	EP 6 FANS ALFA LU-VE DOUBLE GROUP WITH BOX STANDARD				Next 7
								Function =	Total pages 34
Modification	Date	Name							

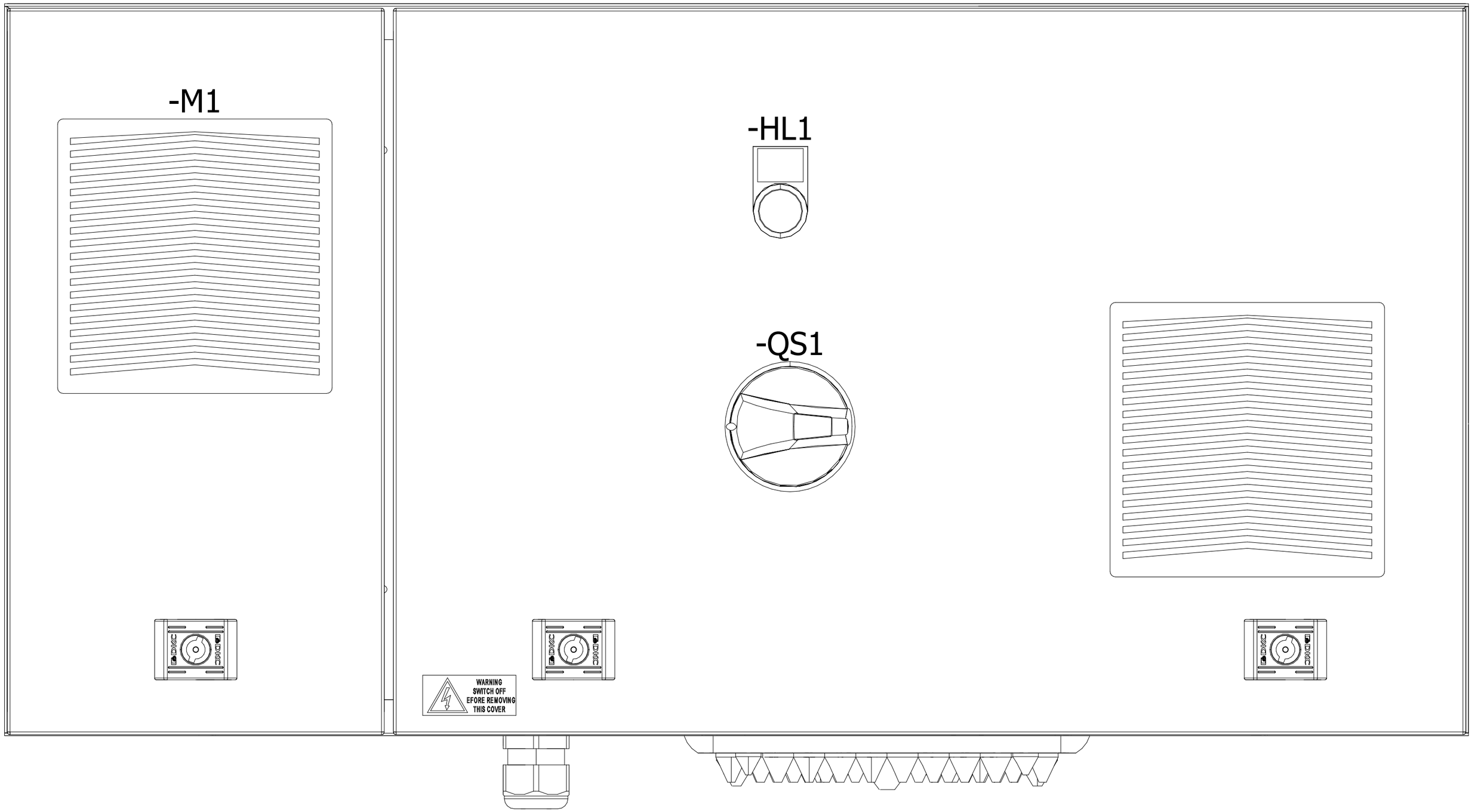

			Date	27/06/2017	CMAL0ME002	ALFA LU-VE	Door view	Mounting locations +	Page /7
			Elab.	Filippo Gregolin	EP 6 FANS ALFA LU-VE DOUBLE GROUP WITH BOX STANDARD				Next 8
								Function =	Total pages 34
Modification	Date	Name							

Layout guides and channels

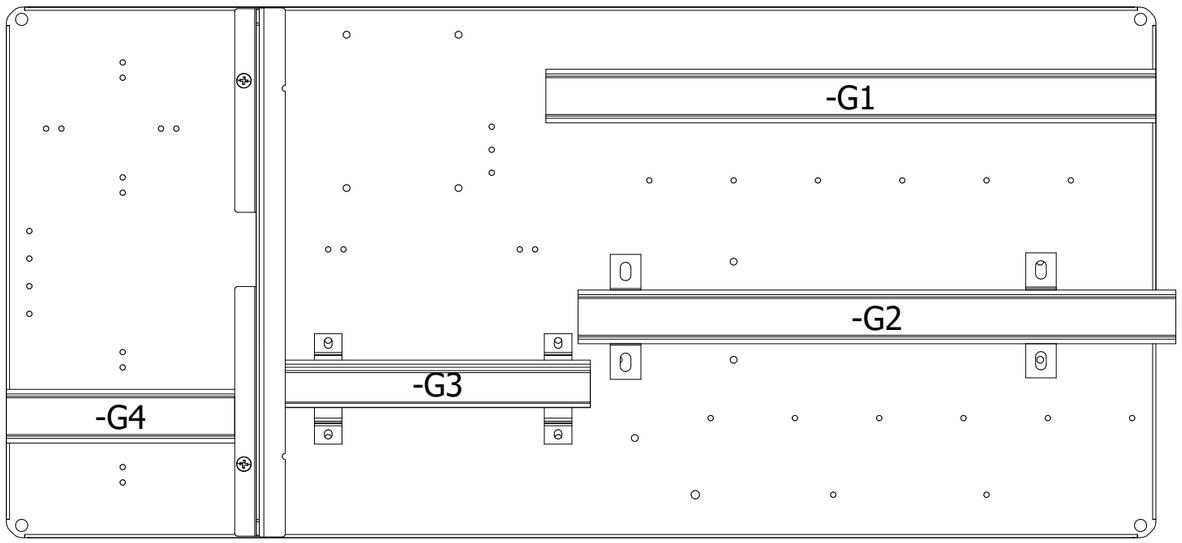

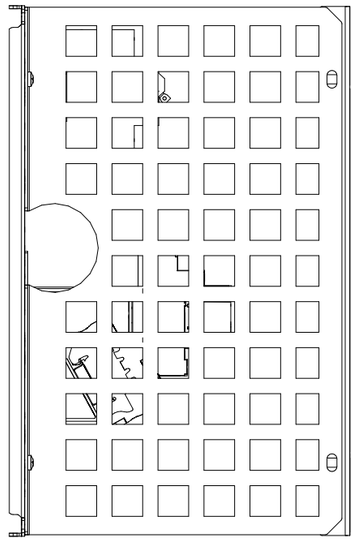

Sign	Type	Length (Tollerance -5mm)
U6	Inclined Bracket	
U7	Inclined Bracket	

G1	35x7.5	400 mm
G2	35x7.5	390 mm
G3	35x7.5	200 mm
G4	35x7.5	150 mm

U5	Support H=70mm	
U4	Support H=70mm	

U1	2cm Rise	
U2	2cm Rise	
U3	2cm Rise	

Empty

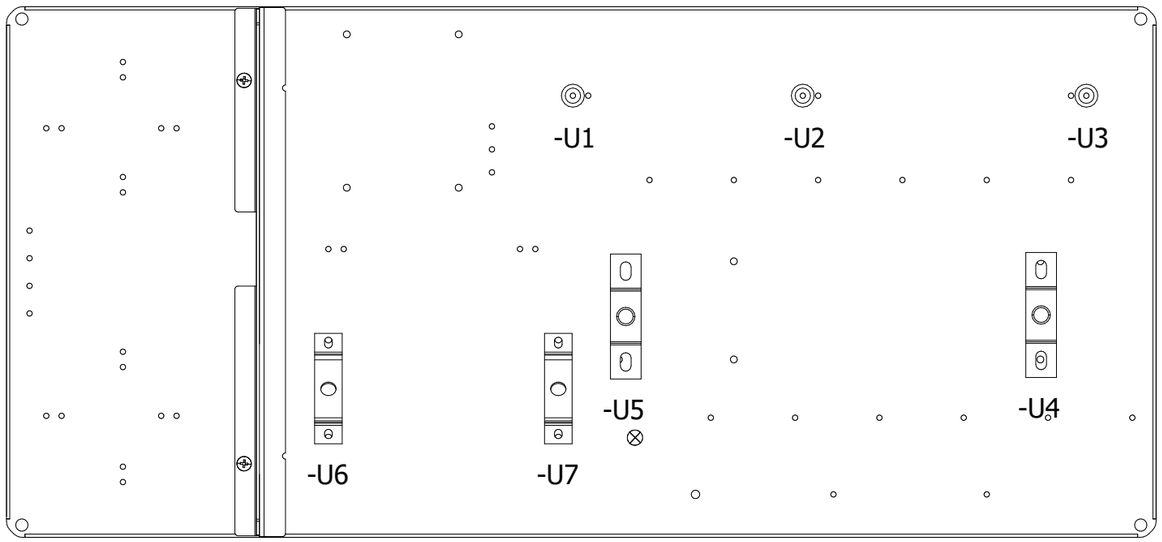

Empty

			Date	27/06/2017
			Elab.	Filippo Gregolin
Modification	Date	Name		

CMAL0ME002

EP 6 FANS ALFA LU-VE DOUBLE GROUP WITH BOX STANDARD

Guides view

Mounting locations +

Function =

Page /8

Next 9

Total pages 34

Layout guides and channels

Sign	Type	Length (Tollerance -5mm)
C1	40x60	205 mm

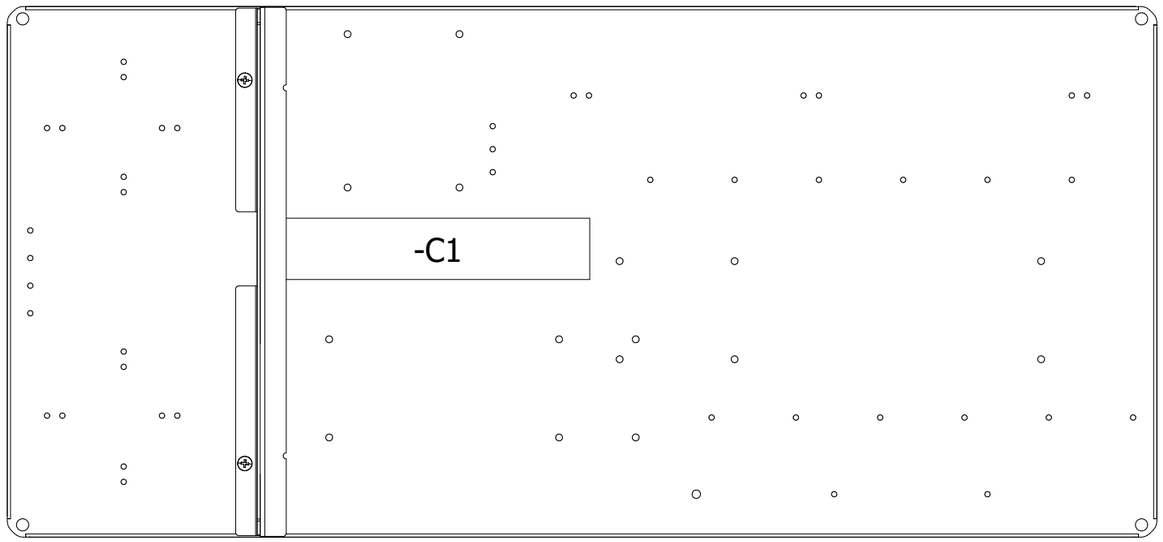

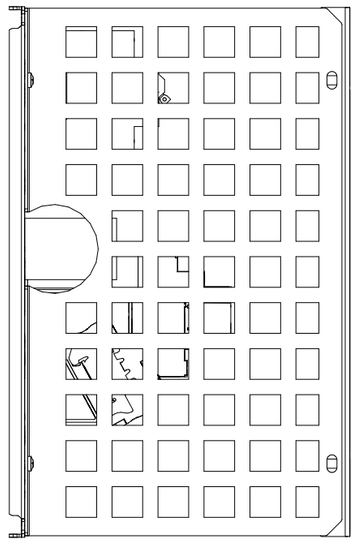

			Date	27/06/2017
			Elab.	Filippo Gregolin
Modification	Date	Name		

CMAL0ME002

EP 6 FANS ALFA LU-VE DOUBLE GROUP WITH BOX STANDARD

Channels view

Mounting locations +

Function =

Page /9

Next 10

Total pages 34

Cable entry/exit components

Item number	Component tipe	Drilling (Tollerance +-0.5mm)
1	M32 Gland	Ø 32.5mm
2	Multi-cable gland	

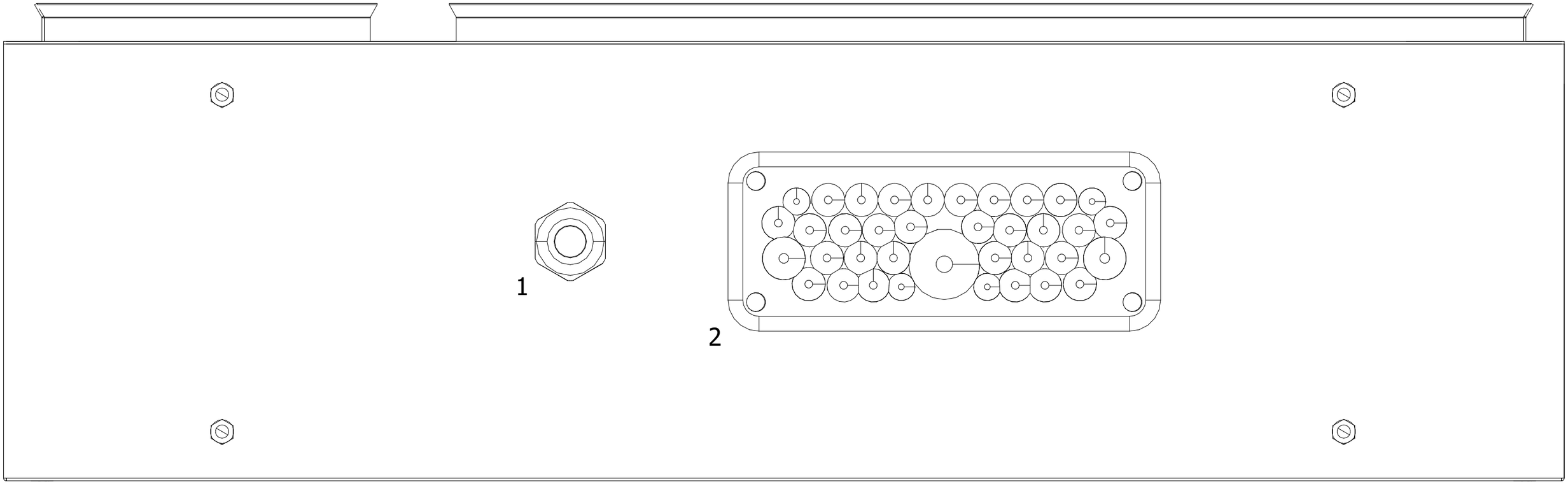

			Date	27/06/2017	CMAL0ME002	ALFA LU-VE	Bottom view	Mounting locations +	Page /10
			Elab.	Filippo Gregolin	EP 6 FANS ALFA LU-VE DOUBLE GROUP WITH BOX STANDARD			Function =	Next +QE/1
Modification	Date	Name							Total pages 34

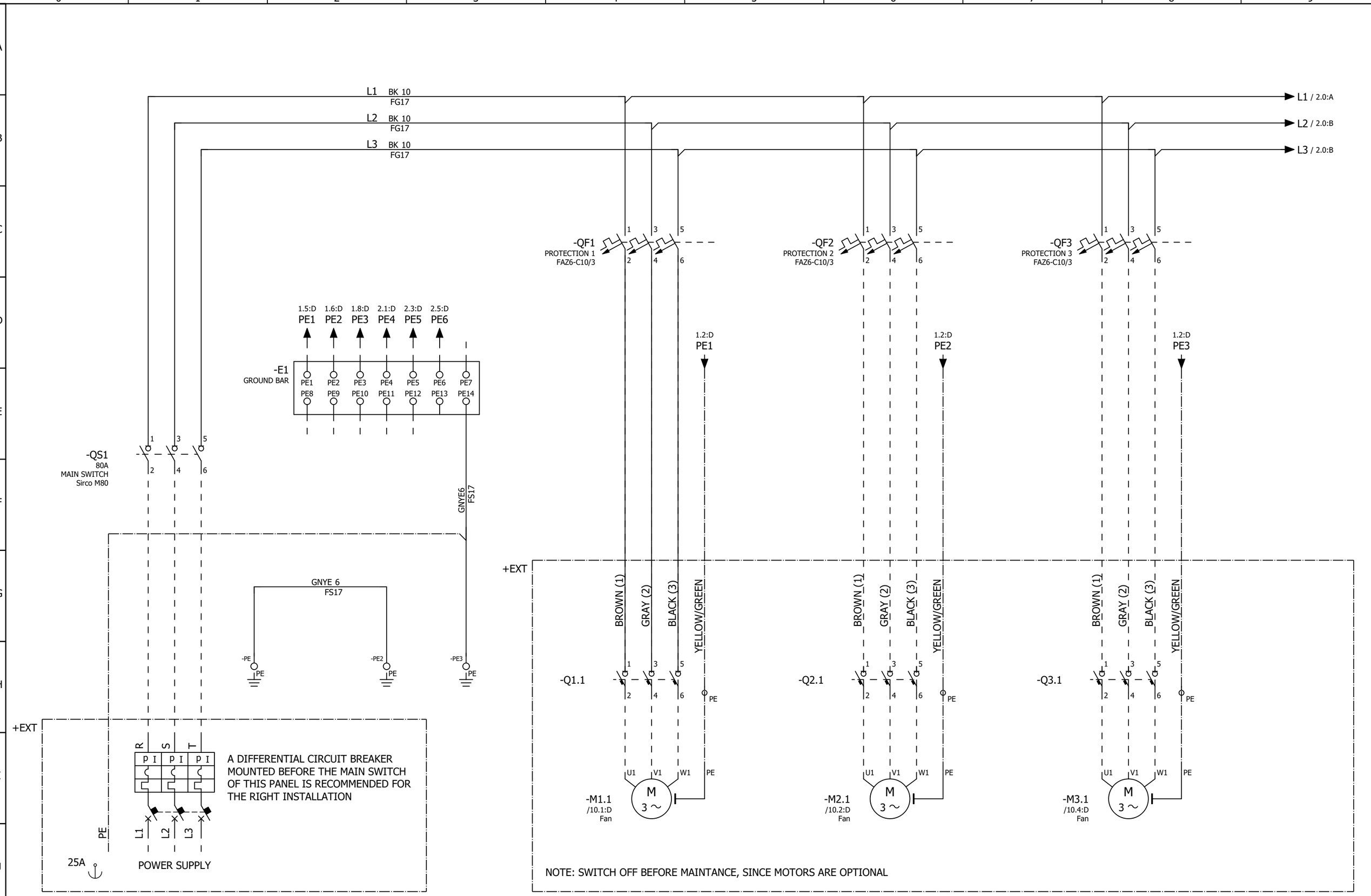

			Date	27/06/2017
			Elab.	Filippo Gregolin
Modification	Date	Name		

CMAL0ME002

EP 6 FANS ALFA LU-VE DOUBLE GROUP WITH BOX STANDARD

ALFA LU-VE

Power circuit

Mounting locations + QE

Function =

Page +QE/1

Next 2

Total pages 34

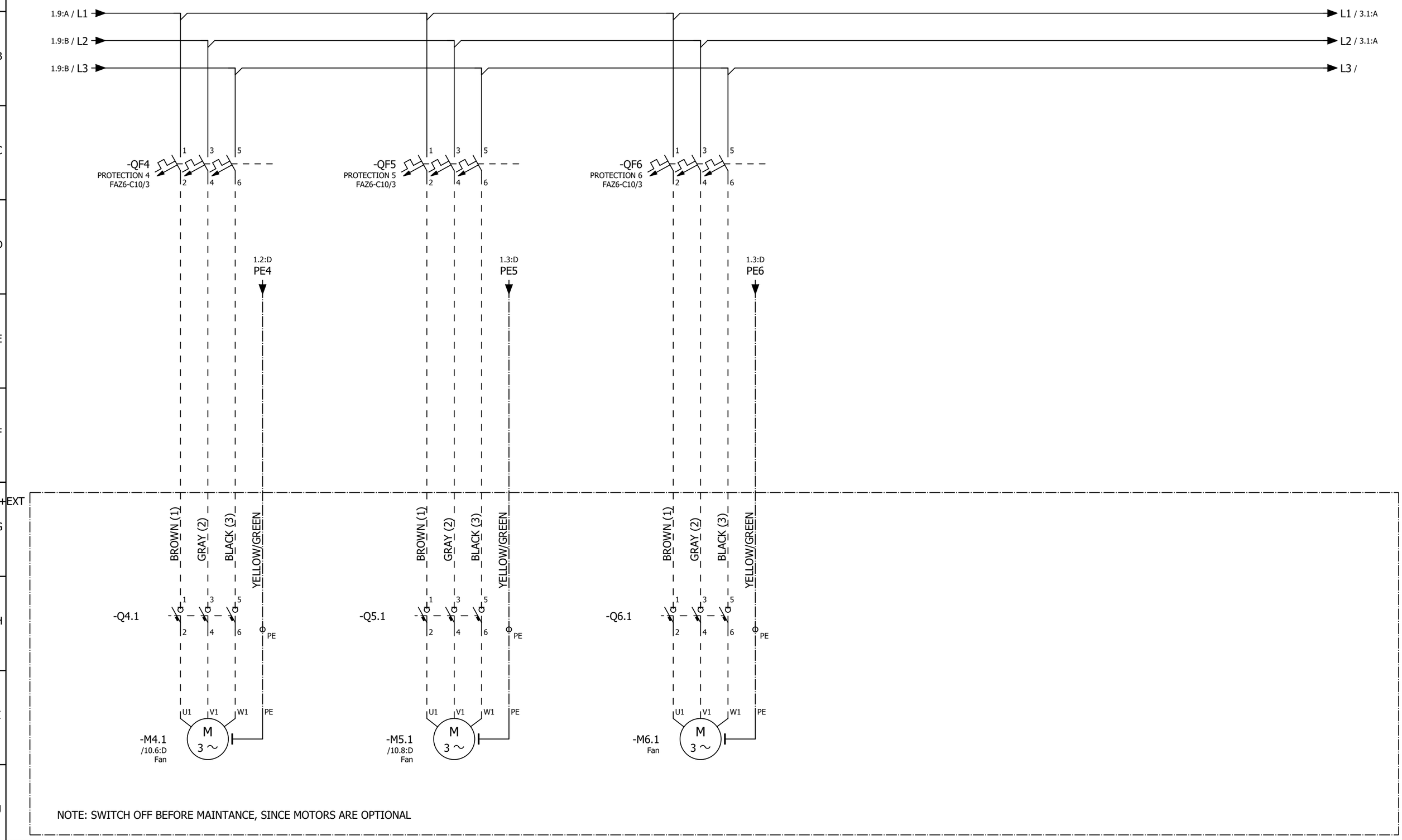

			Date	27/06/2017
			Elab.	Filippo Gregolin
Modification	Date	Name		

CMAL0ME002

EP 6 FANS ALFA LU-VE DOUBLE GROUP WITH BOX STANDARD

ALFA LU-VE

Power circuit

Mounting locations + QE

Function =

Page +QE/2

Next 3

Total pages 34

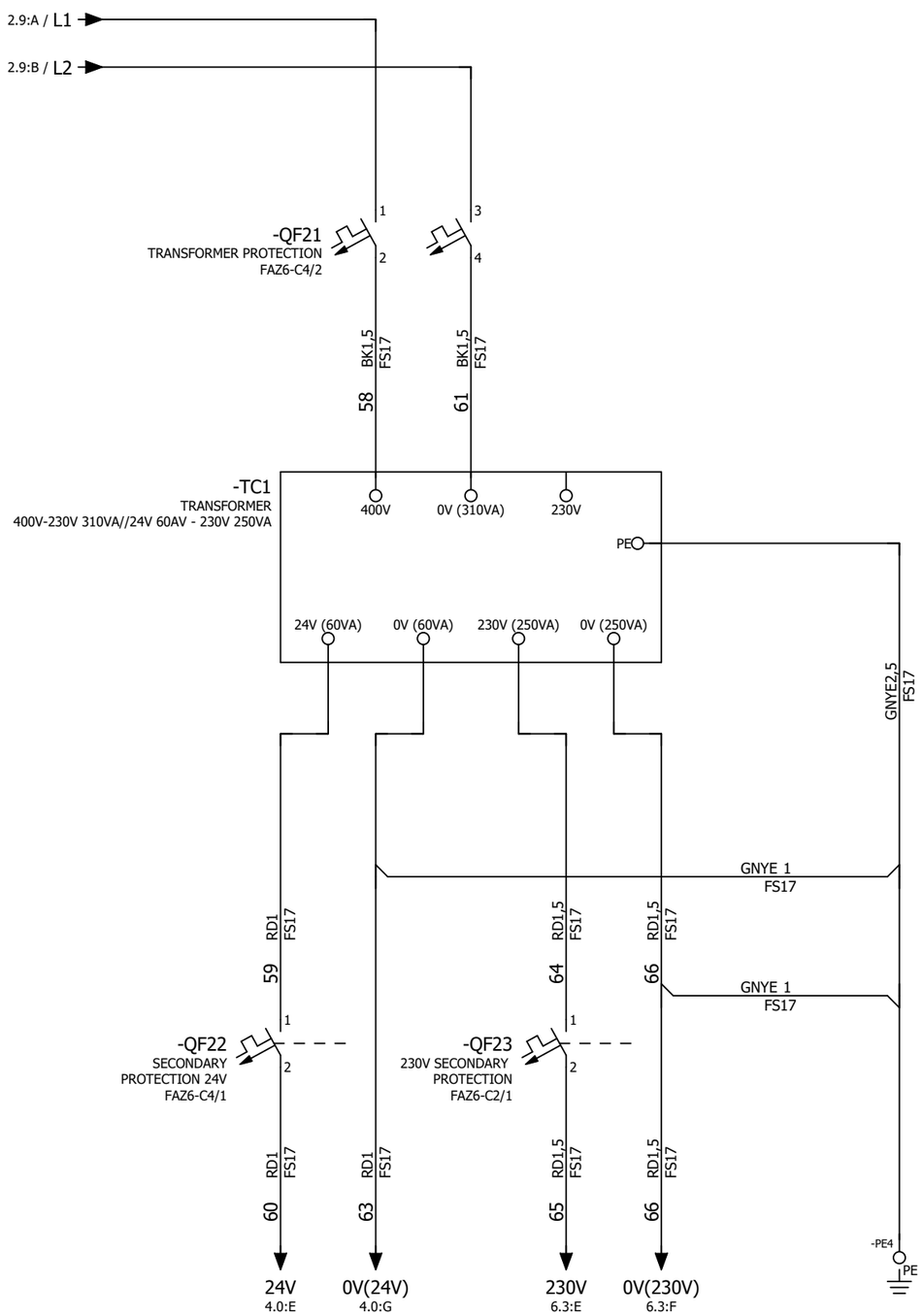

			Date	27/06/2017
			Elab.	Filippo Gregolin
Modification	Date	Name		

CMAL0ME002

EP 6 FANS ALFA LU-VE DOUBLE GROUP WITH BOX STANDARD

ALFA LU-VE

Power circuit

Mounting locations + QE

Function =

Page +QE/3

Next 4

Total pages 34

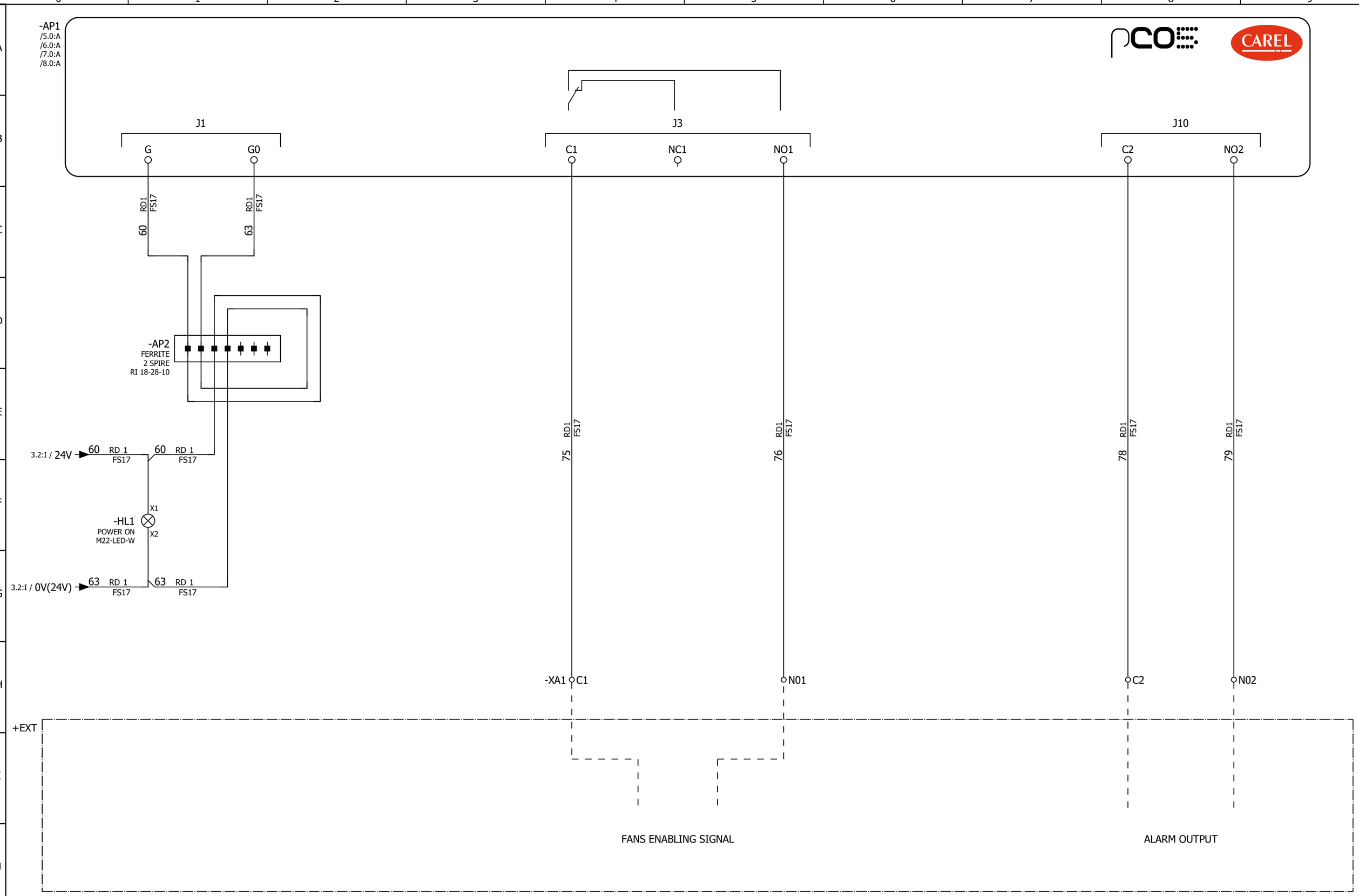

			Date	27/06/2017
			Elab.	Filippo Gregolin
Modification	Date	Name		

CMAL0ME002

EP 6 FANS ALFA LU-VE DOUBLE GROUP WITH BOX STANDARD

Auxiliary circuit

Mounting locations + QE

Function =

Page +QE/4

Next 5

Total pages 34

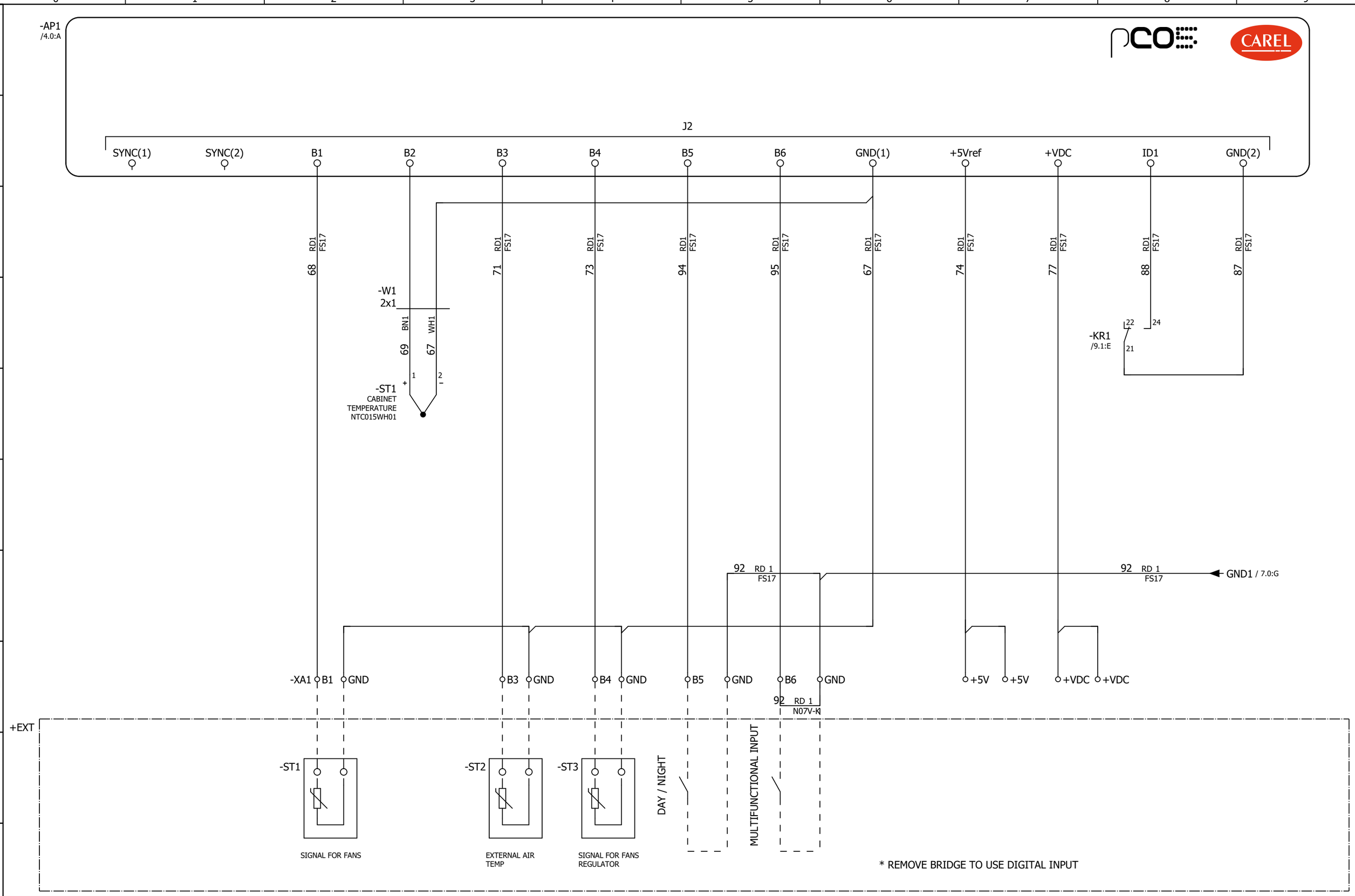

			Date	27/06/2017
			Elab.	Filippo Gregolin
Modification	Date	Name		

CMAL0ME002

EP 6 FANS ALFA LU-VE DOUBLE GROUP WITH BOX STANDARD

Auxiliary circuit

Mounting locations + QE

Function =

Page +QE/5

Next 5.a

Total pages 34

NO PT1000
B1 SIGNAL FOR FANS (NTC)
B2 E.P. TEMPERATURE (NTC)
B3 EXTERNAL AIR TEMPERATURE (NTC)
B4 ----------

WITH PT1000
B1 ----------
B2 E.P. TEMPERATURE (NTC)
B3 EXTERNAL AIR TEMPERATURE (NTC)
B4 SIGNAL FOR FANS (PT1000)

PROBE CONNECTIONS

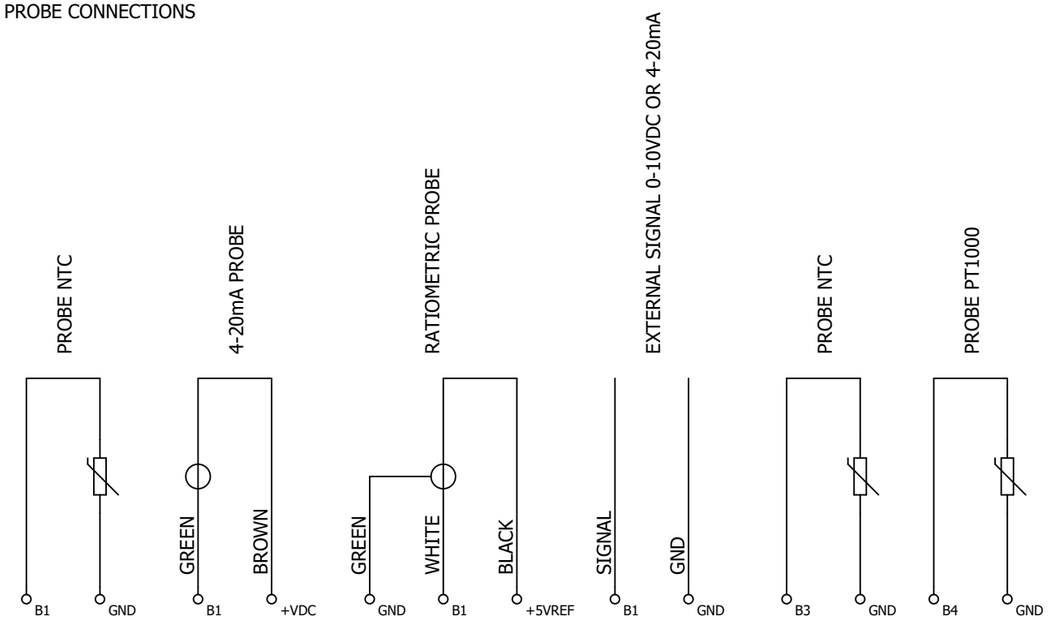

			Date	27/06/2017
			Elab.	Filippo Gregolin
Modification	Date	Name		

CMAL0ME002

EP 6 FANS ALFA LU-VE DOUBLE GROUP WITH BOX STANDARD

ALFA LU-VE

Auxiliary circuit

Mounting locations + QE

Function =

Page +QE/5.a

Next 6

Total pages 34

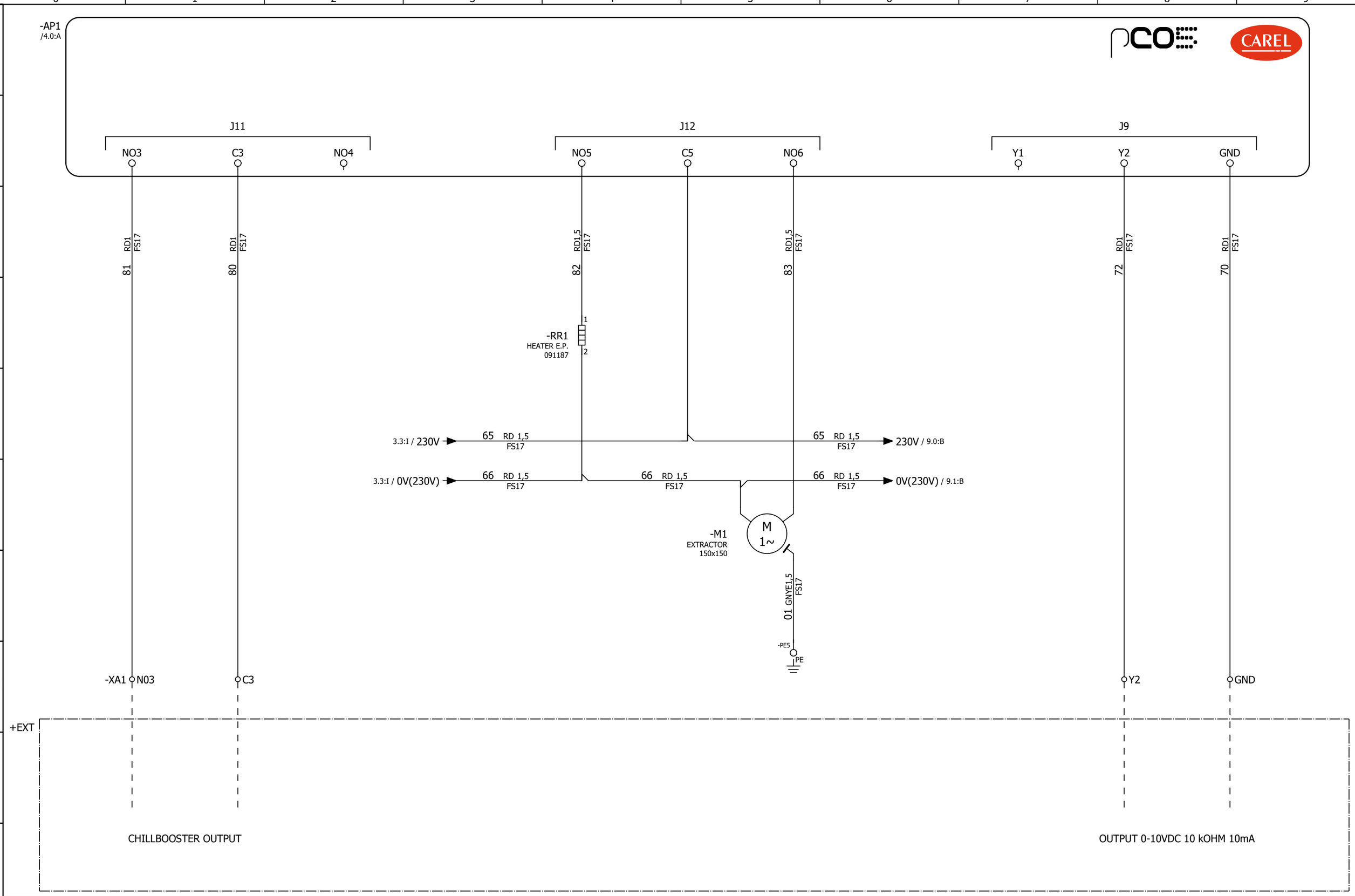

			Date	27/06/2017
			Elab.	Filippo Gregolin
Modification	Date	Name		

CMAL0ME002

EP 6 FANS ALFA LU-VE DOUBLE GROUP WITH BOX STANDARD

ALFA LU-VE

Auxiliary circuit

Mounting locations + QE

Function =

Page +QE/6

Next 7

Total pages 34

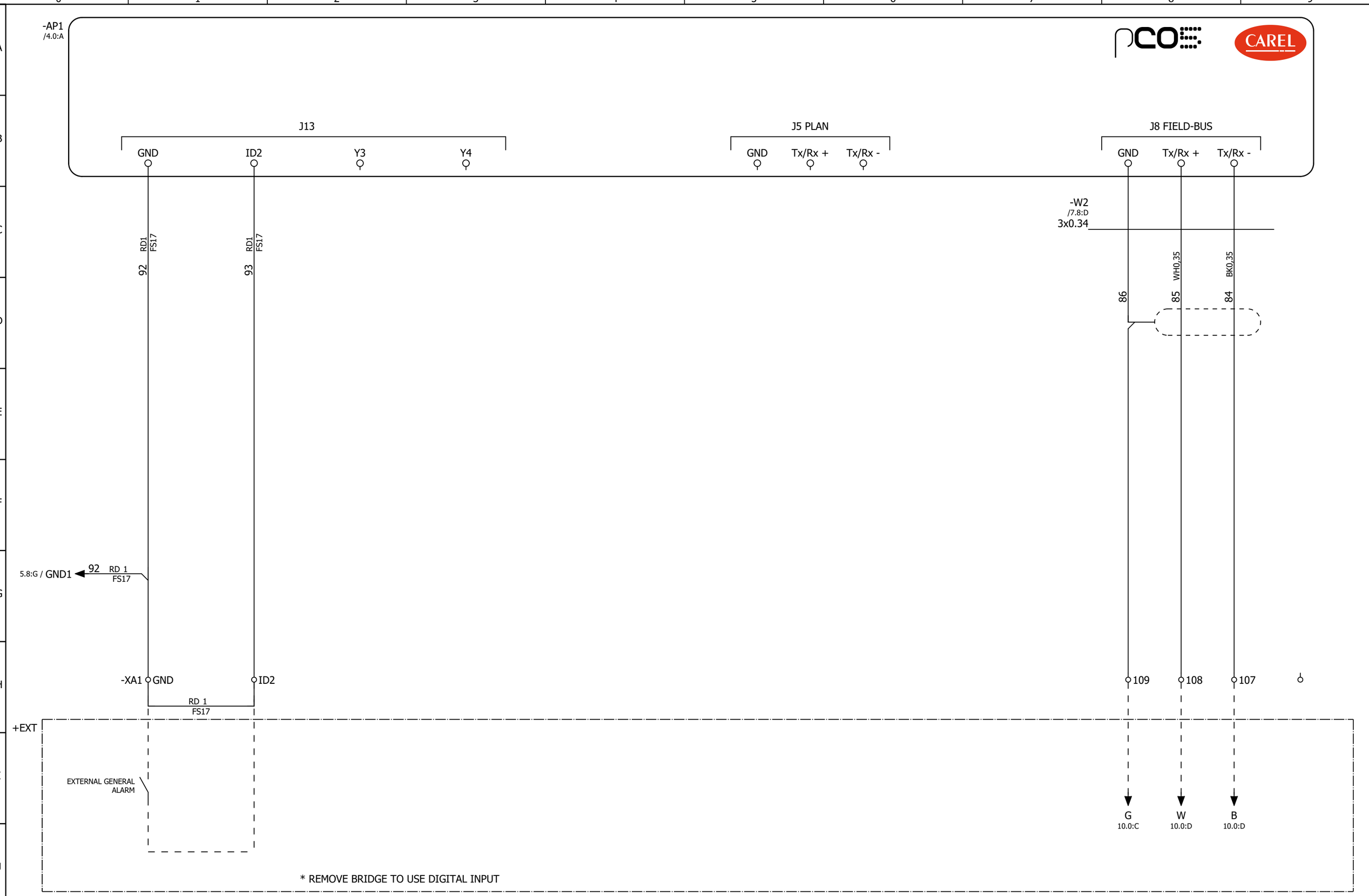

			Date	27/06/2017
			Elab.	Filippo Gregolin
Modification	Date	Name		

CMAL0ME002

EP 6 FANS ALFA LU-VE DOUBLE GROUP WITH BOX STANDARD

Auxiliary circuit

Mounting locations + QE

Function =

Page +QE/7

Next 8

Total pages 34

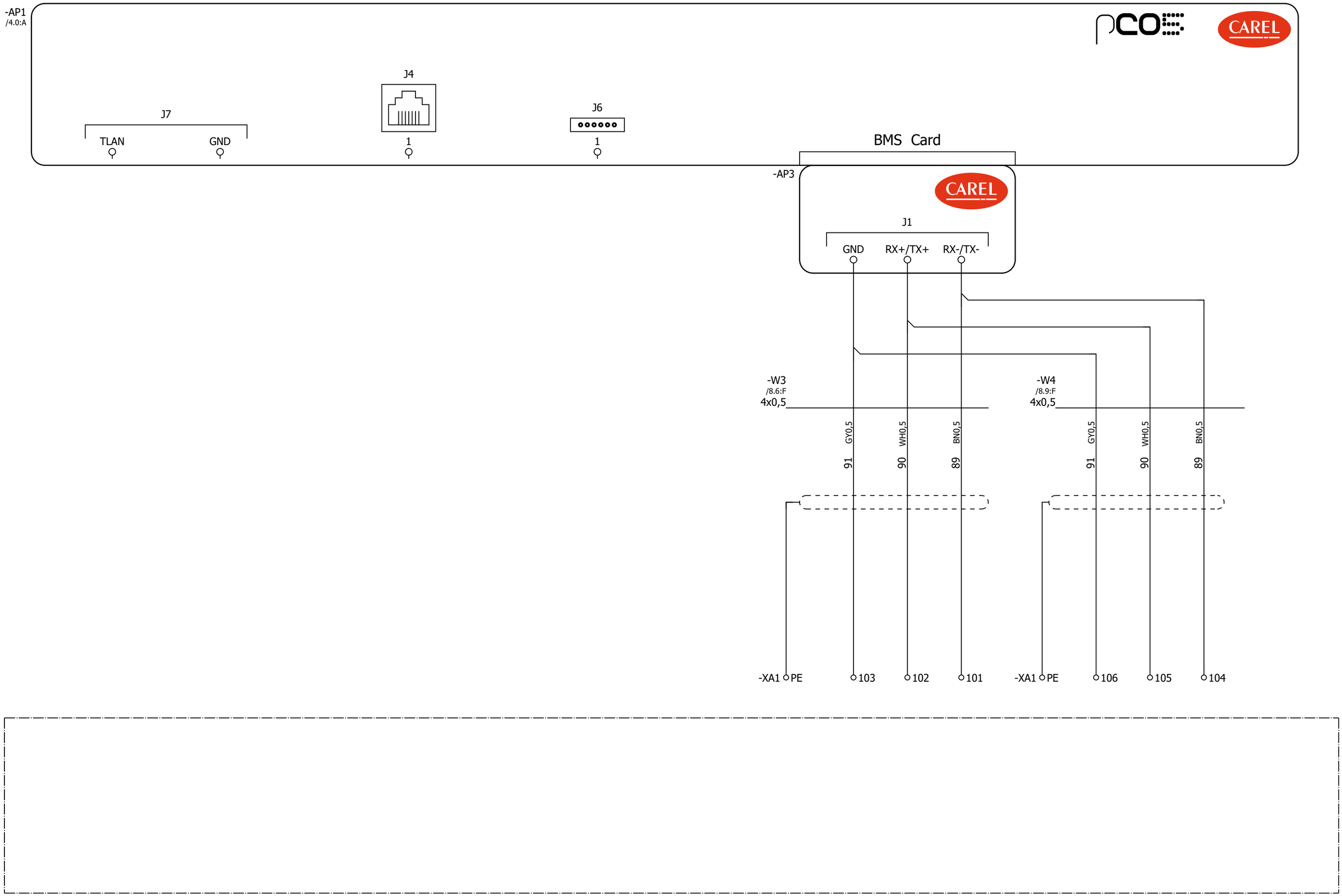

			Date	27/06/2017
			Elab.	Filippo Gregolin
Modification	Date	Name		

CMAL0ME002

EP 6 FANS ALFA LU-VE DOUBLE GROUP WITH BOX STANDARD

Auxiliary circuit

Mounting locations + QE

Function =

Page +QE/8

Next 9

Total pages 34

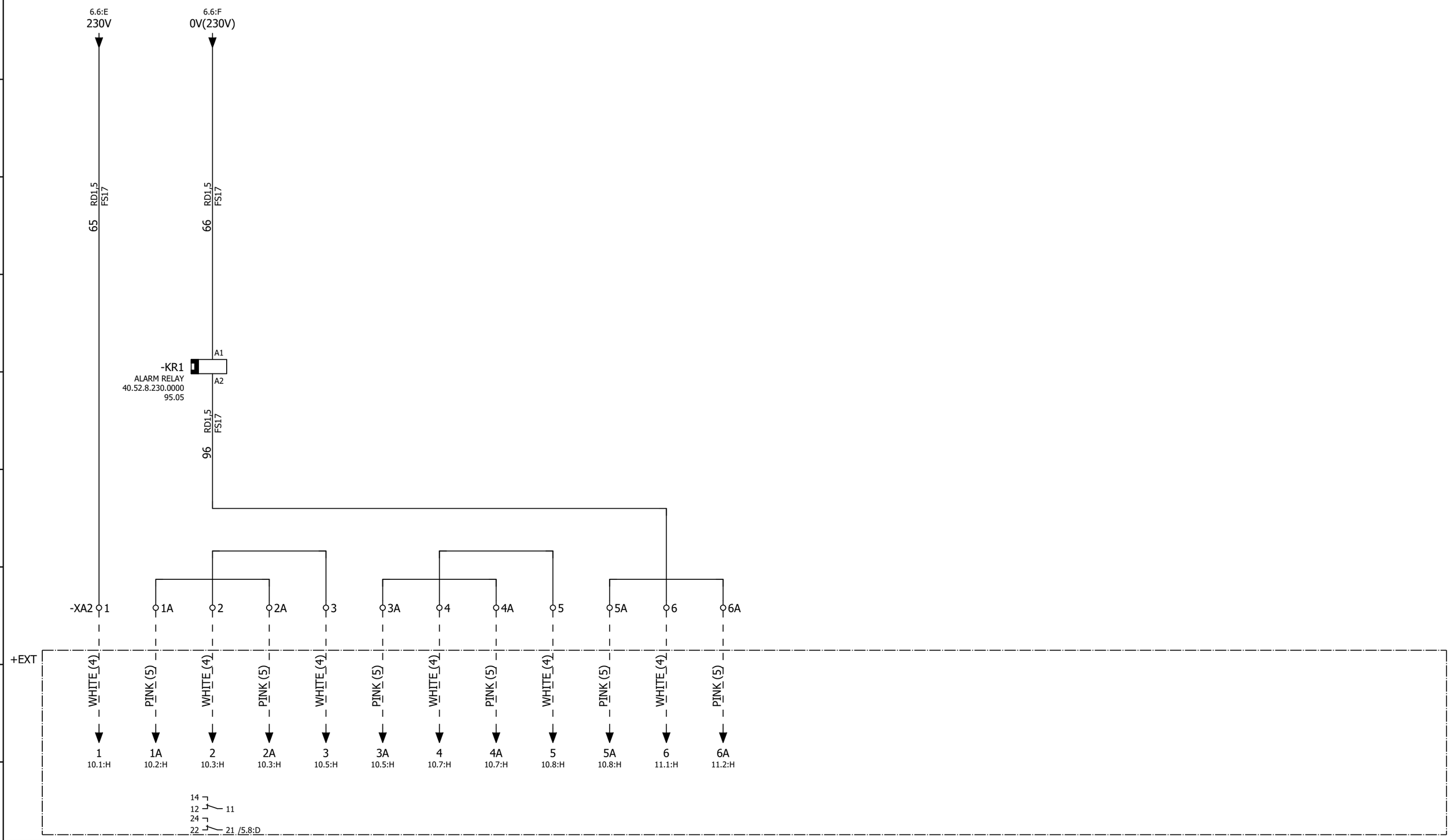

			Date	27/06/2017
			Elab.	Filippo Gregolin
Modification	Date	Name		

CMAL0ME002

EP 6 FANS ALFA LU-VE DOUBLE GROUP WITH BOX STANDARD

ALFA LU-VE

Auxiliary circuit

Mounting locations	+ QE	Page	+QE/9
		Next	10
Function	=	Total pages	34

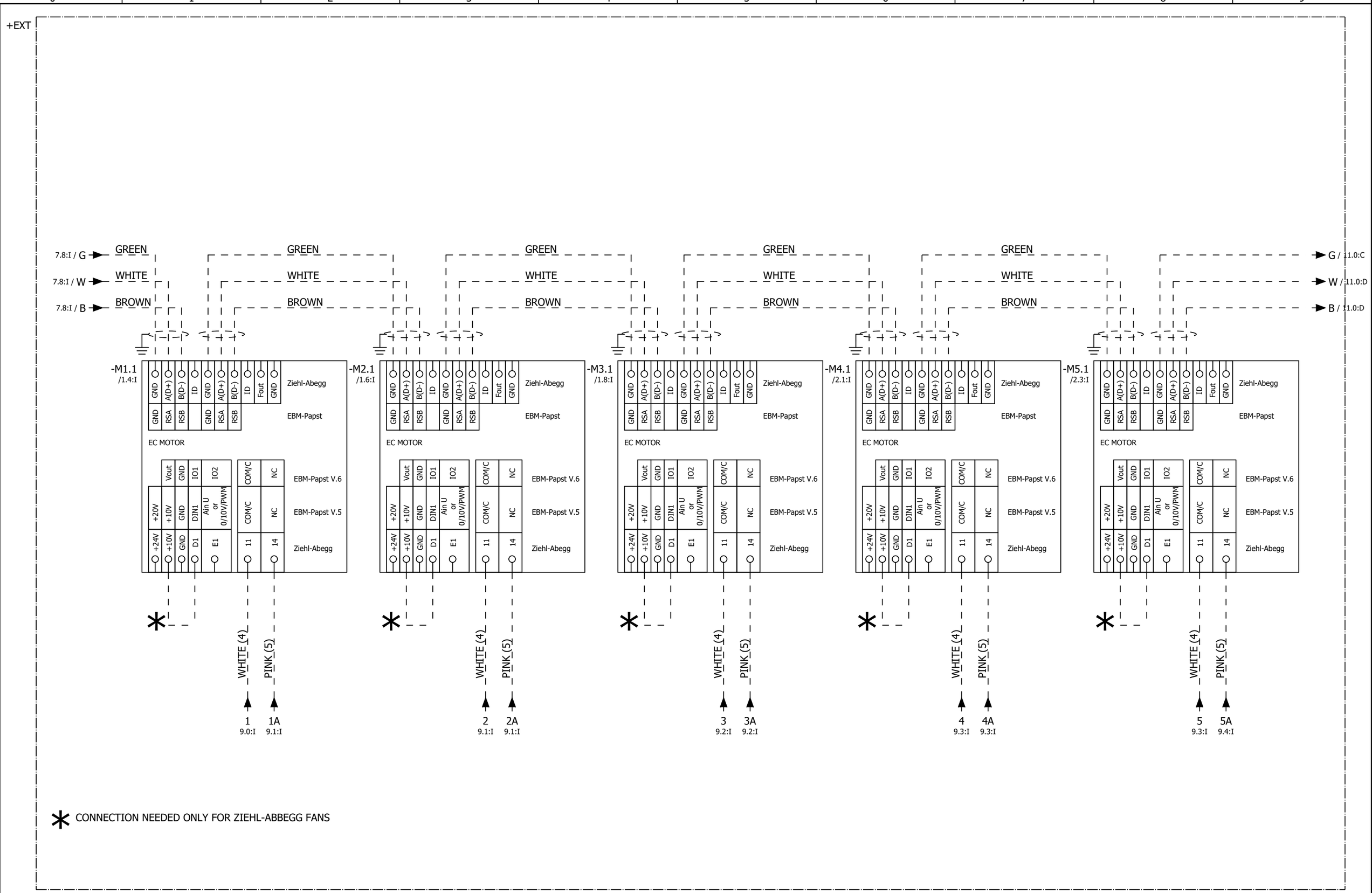

			Date	27/06/2017
			Elab.	Filippo Gregolin
Modification	Date	Name		

CMAL0ME002

EP 6 FANS ALFA LU-VE DOUBLE GROUP WITH BOX STANDARD

ALFA LU-VE

Auxiliary circuit

Mounting locations + QE

Function =

Page +QE/10

Next 11

Total pages 34

+EXT

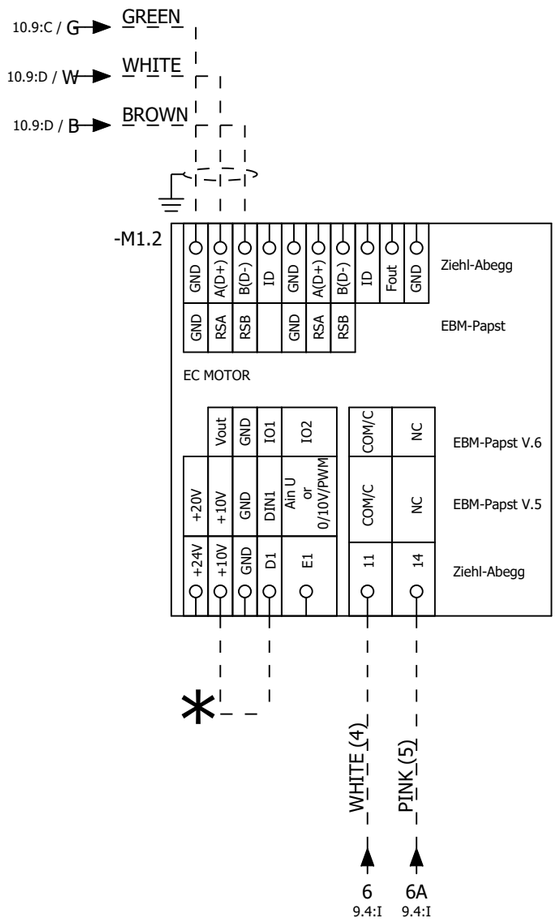

* CONNECTION NEEDED ONLY FOR ZIEHL-ABBEGG FANS

			Date	27/06/2017
			Elab.	Filippo Gregolin
Modification	Date	Name		

CMAL0ME002

EP 6 FANS ALFA LU-VE DOUBLE GROUP WITH BOX STANDARD

ALFA LU-VE

Auxiliary circuit

Mounting locations + QE

Function =

Page +QE/11

Next 12

Total pages 34

6 FAN MOTORS

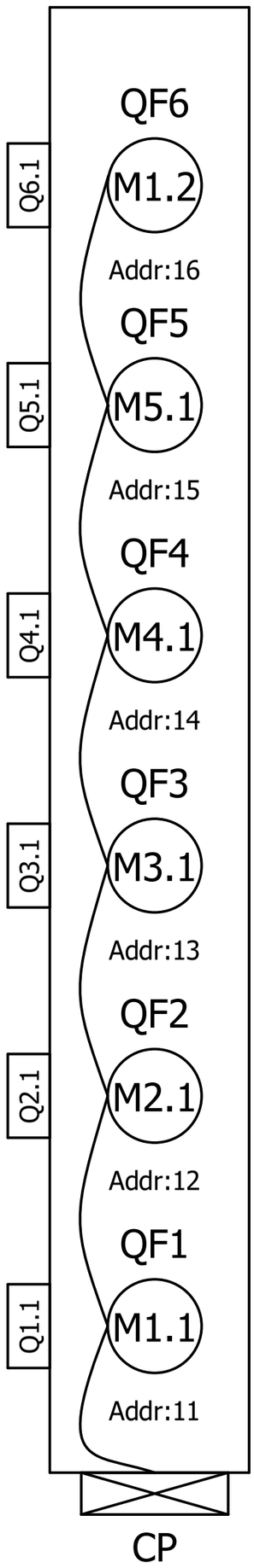

Page	+QE/12		
Next	13		
Total pages	34		
Mounting locations	+ QE		
Function	=		
Serial connection			
CMAL0ME002			
EP 6 FANS ALFA LU-VE DOUBLE GROUP WITH BOX STANDARD			
Date	27/06/2017		
Elab.	Filippo Gregolin		
Modification	Date	Name	

CAREL

CAREL INDUSTRIES S.p.A. - Società Unipersonale
Via dell'Industria, 11 - 35020 Brugine – Padova – Italia
Tel. (+39) 049.9716611 – Fax (+39) 049.9716600
www.carel.com – e-mail: carel@carel.com

Cap. Soc. € 10.000.000 i.v.
C.C.I.A.A. Padova Reg. Imp n. 4359090281
Part. IVA e Cod. Fisc. 04359090281
Società soggetta ad attività di direzione e coordinamento di Carel S.p.A.

CE

EU Declaration of Conformity

Manufacturer: **CAREL Industries S.p.A.**
Via dell'Industria, 11 35020 Brugine (PD) Italy

Electric Control Panels series Carel Power Solutions
Code :
Serial number:

CMAL0ME002 / CMAL0ME005

The manufacturer declares that all the above indicated products are in accordance with the EU Directives:

2006/95/EC (LVD)

and comply with the requirements of the following European standards:

EN 60204-1

Brugine, 27/06/2017

CAREL INDUSTRIES S.p.A.
Technical Director

Ing. Umberto Bianchini

Modification	Date	Name		Date	27/06/2017
				Elab.	Filippo Gregolin

CMAL0ME002
EP 6 FANS ALFA LU-VE DOUBLE GROUP WITH BOX STANDARD

ALFA LU-VE

Serial connection

Function	=	Mounting locations	+ QE	Page	+QE/13
				Next	=REP1+/1,0
Total pages	34				

Multicore cables scheme

Cable type PROBE CABLE

Oracle code PROBE CABLE

Total Cable Length Cut:

Departure | Cross ref. | Terminator

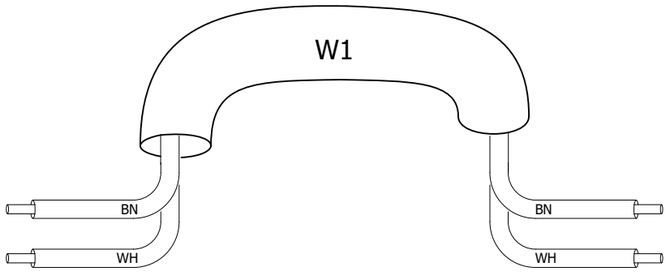

Terminator | Cross ref. | Arrival

Unsheathing cable departure

Unsheathing cable arrival

			Date	27/06/2017
			Elab.	Filippo Gregolin
Modification	Date	Name		

CMAL0ME002

EP 6 FANS ALFA LU-VE DOUBLE GROUP WITH BOX STANDARD

ALFA LU-VE

Multicore cables scheme

Mounting locations +

Function =REP1

Page =REP1/1,0

Next 1,1

Total pages 34

Multicore cables scheme

Cable type Belden

Oracle code 1008176AXX

Total Cable Length Cut:

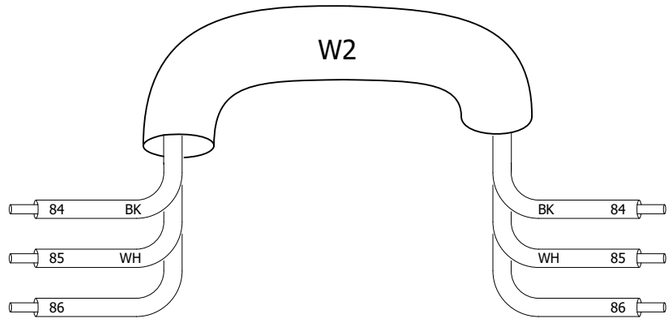

Departure	Cross ref.	Terminator	Terminator	Cross ref.	Arrival
XA1:107:A	+QE/7.8:H			+QE/7.8:B	+QE-AP1:J8 FIELD-BUS:Tx/Rx -
XA1:108:B	+QE/7.8:H			+QE/7.8:B	+QE-AP1:J8 FIELD-BUS:Tx/Rx +
XA1:109:A	+QE/7.8:H			+QE/7.8:B	+QE-AP1:J8 FIELD-BUS:GND

Unsheathing cable departure

Unsheathing cable arrival

			Date	27/06/2017	CMAL0ME002	ALFA LU-VE	Multicore cables scheme	Mounting locations +	Page =REP1/1,1
			Elab.	Filippo Gregolin	EP 6 FANS ALFA LU-VE DOUBLE GROUP WITH BOX STANDARD				Next 1,2
								Function =REP1	Total pages 34
Modification	Date	Name							

Multicore cables scheme

Cable type Shielded 3x0.5

Oracle code 1008019AXX

Total Cable Length Cut:

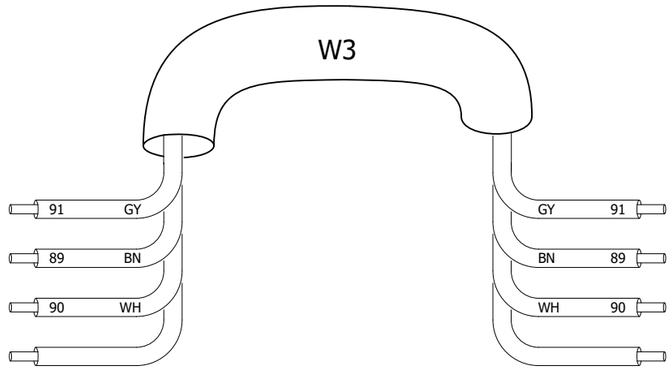

Departure	Cross ref.	Terminator	Terminator	Cross ref.	Arrival
XA1:103:A	+QE/8.6:H			+QE/8.6:C	+QE-AP3:J1:GND
XA1:101:A	+QE/8.7:H			+QE/8.7:C	+QE-AP3:J1:RX-/TX-
XA1:102:B	+QE/8.6:H			+QE/8.6:C	+QE-AP3:J1:RX+/TX+
XA1:PE:B	+QE/8.5:H			+QE/8.5:E	W3

Unsheathing cable departure

Unsheathing cable arrival

			Date	27/06/2017
			Elab.	Filippo Gregolin
Modification	Date	Name		

CMAL0ME002

EP 6 FANS ALFA LU-VE DOUBLE GROUP WITH BOX STANDARD

ALFA LU-VE

Multicore cables scheme

Mounting locations +

Function =REP1

Page =REP1/1,2

Next 1,3

Total pages 34

Multicore cables scheme

Cable type Shielded 3x0.5

Oracle code 1008019AXX

Total Cable Length Cut:

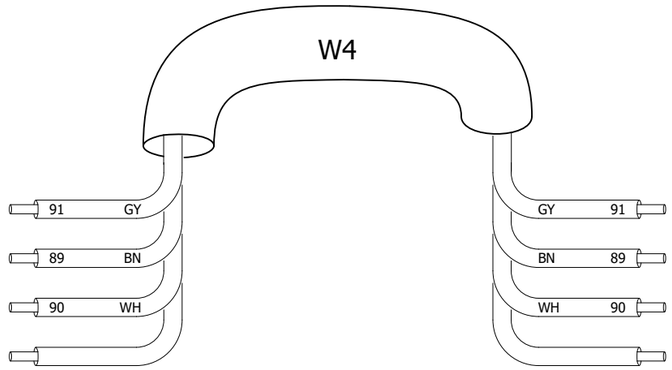

Departure	Cross ref.	Terminator	Terminator	Cross ref.	Arrival
XA1:106:B	+QE/8.8:H			+QE/8.6:C	+QE-AP3:J1:GND
XA1:104:B	+QE/8.8:H			+QE/8.7:C	+QE-AP3:J1:RX-/TX-
XA1:105:A	+QE/8.8:H			+QE/8.6:C	+QE-AP3:J1:RX+/TX+

Unsheathing cable departure

Unsheathing cable arrival

			Date	27/06/2017
			Elab.	Filippo Gregolin
Modification	Date	Name		

CMAL0ME002

EP 6 FANS ALFA LU-VE DOUBLE GROUP WITH BOX STANDARD

ALFA LU-VE

Multicore cables scheme

Mounting locations +

Function =REP1

Page =REP1/1,3

Next 2,0

Total pages 34

Terminal diagram

Terminal strip

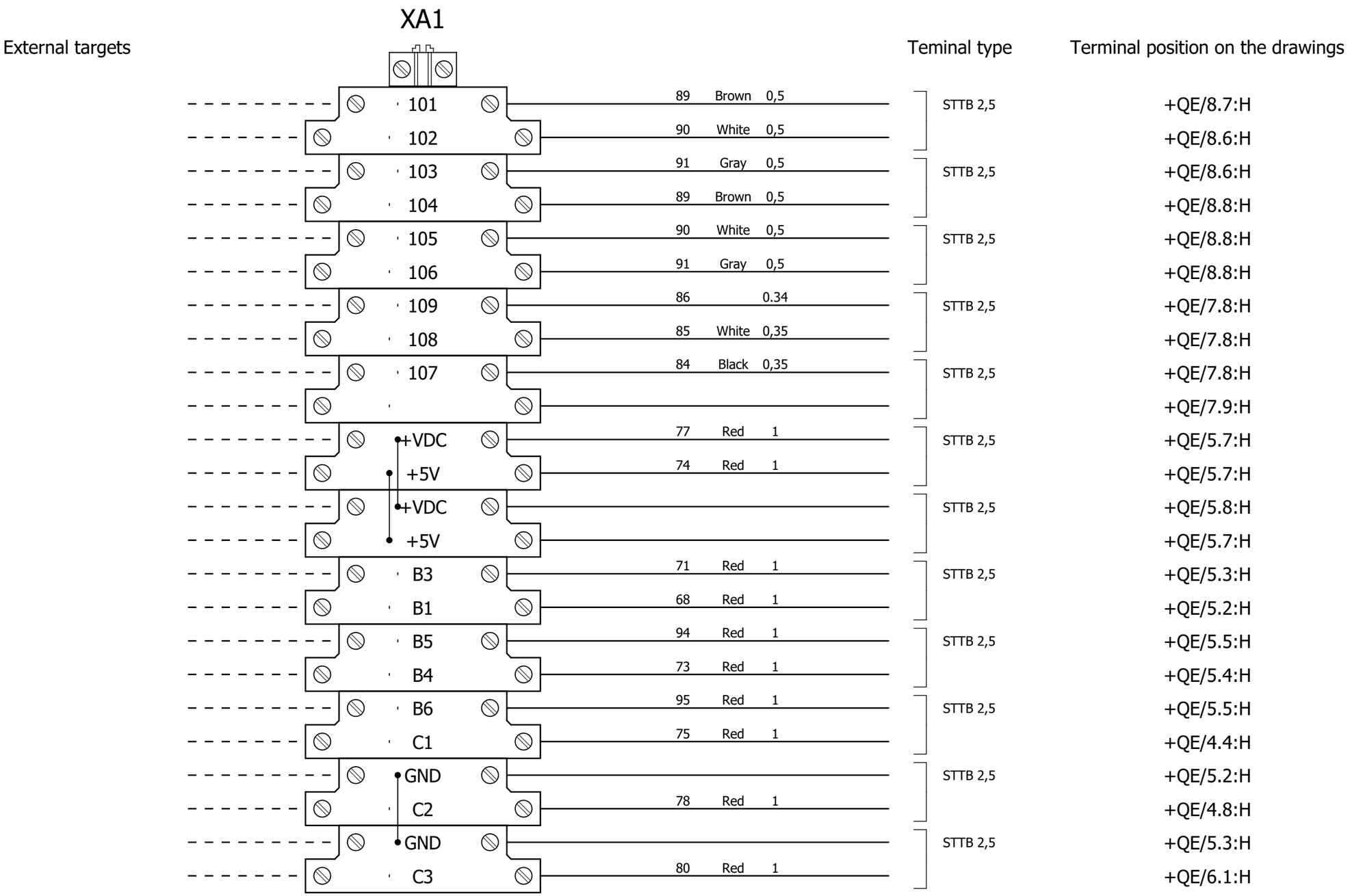

			Date	27/06/2017
			Elab.	Filippo Gregolin
Modification	Date	Name		

CMAL0ME002

EP 6 FANS ALFA LU-VE DOUBLE GROUP WITH BOX STANDARD

ALFA LU-VE

Terminal strip

Mounting locations +

Function =REP1

Page =REP1/2,0

Next 2,0.a

Total pages 34

Terminal diagram

Terminal strip

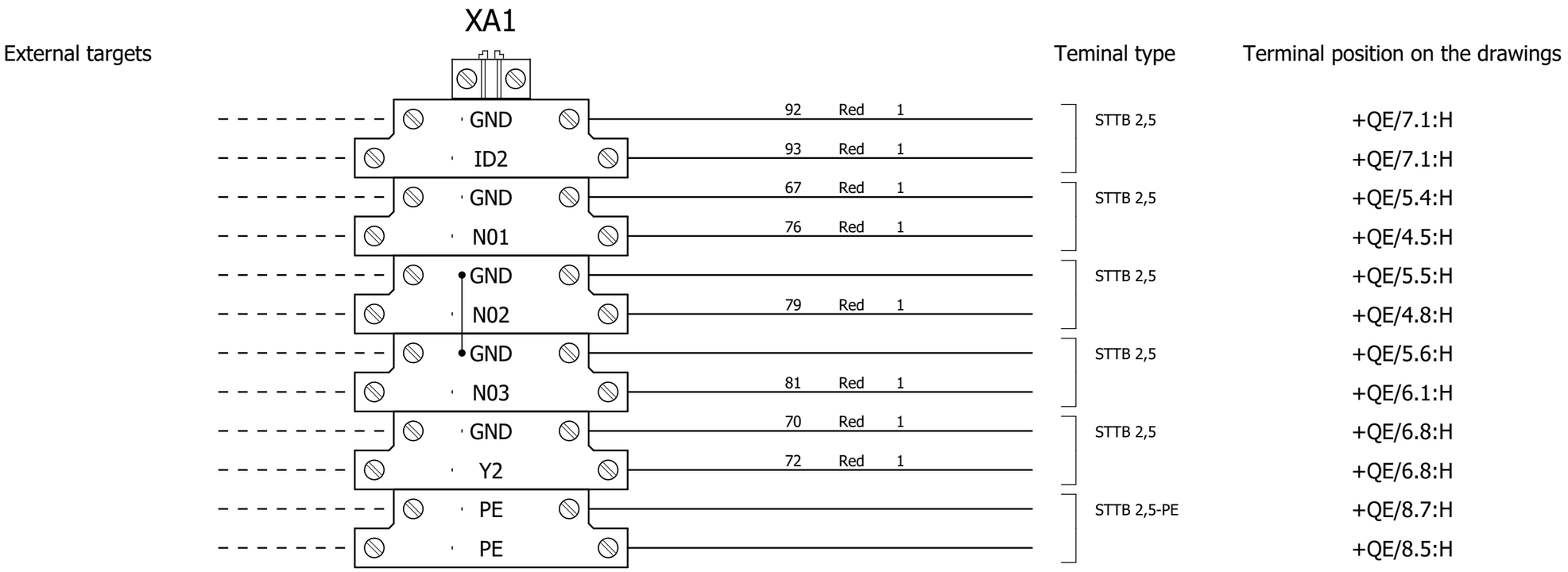

			Date	27/06/2017	CMAL0ME002	ALFA LU-VE	Terminal strip	Mounting locations +	Page =REP1/2,0.a
			Elab.	Filippo Gregolin	EP 6 FANS ALFA LU-VE DOUBLE GROUP WITH BOX STANDARD				Next 2,1
Modification	Date	Name						Function =REP1	Total pages 34

Terminal diagram

Terminal strip

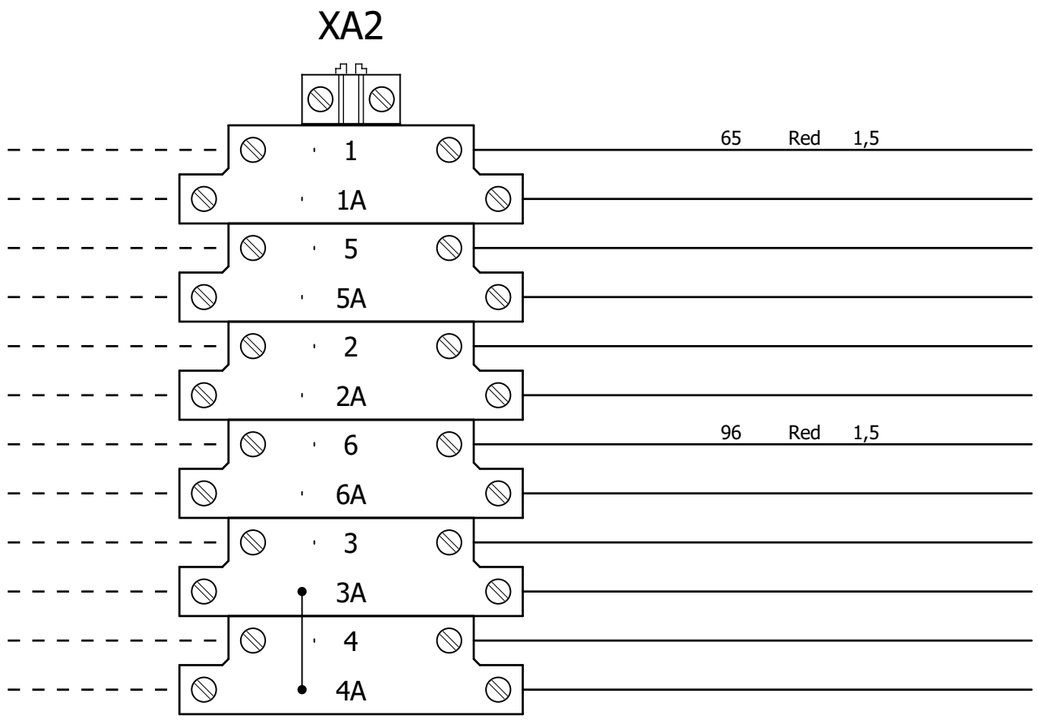

External targets	Teminal type	Terminal position on the drawings
	STTB 2,5	+QE/9.0:H
		+QE/9.1:H
	STTB 2,5	+QE/9.3:H
		+QE/9.4:H
	STTB 2,5	+QE/9.1:H
		+QE/9.1:H
	STTB 2,5	+QE/9.4:H
		+QE/9.4:H
	STTB 2,5	+QE/9.2:H
		+QE/9.2:H
	STTB 2,5	+QE/9.3:H
		+QE/9.3:H

BOM internal panel

InternoQE_F01_003

Short name	Designation	Function text	Position	Manufacturer	Component tipe	Oracle code
AP1	Programmable control		=+QE/4.0:A	CAREL	PCO Compact	PCOXLV0DB0
AP2	Damping magnet, M 5.0	FERRITE 2 SPIRE	=+QE/4.1:D	KE-KITAGAWA	FERRITE CORE	0907877AXX
AP3	Scheda seriale BMS		=+QE/8.6:B	CAREL	Scheda seriale BMS	PCOS004850
E1	Earth terminal	GROUND BAR	=+QE/1.2:D	SCHNEIDER ELECTRIC	14977	2217096CEL
HL1	White lamp 24Vac	POWER ON	=+QE/4.1:F	EATON ELECTRIC	M22-LED-W	0505103CEL
HL1	Plate	=	=+QE/4.1:F	CEMBRE	15X27	1800243AXX
HL1	Support plate	=	=+QE/4.1:F	CEMBRE	D22 17X30	1800242AXX
HL1	Glass plate	=	=+QE/4.1:F	CEMBRE	15X27	1800244AXX
HL1	Support	=	=+QE/4.1:F	EATON ELECTRIC	M22-A	0505184AXX
HL1	White indicator plate	=	=+QE/4.1:F	EATON ELECTRIC	216771	0505111CEL
KR1	Relay	ALARM RELAY	=+QE/9.1:E	FINDER	40.52.8.230.0000	0100751CEL
KR1	Base element	=	=+QE/9.1:E	FINDER	95.05	5931384AXX
KR2	Base element		(Quadro elettri co)	FINDER	95.05	5931384AXX
KR2	Relay		(Quadro elettri co)	FINDER	40.52.8.230.0000	0100751CEL
M1	Internal fan	EXTRACTOR	=+QE/6.5:F	EZM	150x150	1312697AXX
PE	GROUND		=+QE/1.1:H		PE	PE
PE2	GROUND		=+QE/1.2:H		PE	PE
PE3	GROUND		=+QE/1.3:H		PE	PE
PE4	GROUND		=+QE/3.4:H		PE	PE
PE5	GROUND		=+QE/6.5:G		PE	PE
QF1	Power circuit breaker	PROTECTION 1	=+QE/1.4:C	EATON ELECTRIC	FAZ6-C10/3	0403856CEL
QF2	Power circuit breaker	PROTECTION 2	=+QE/1.6:C	EATON ELECTRIC	FAZ6-C10/3	0403856CEL
QF3	Power circuit breaker	PROTECTION 3	=+QE/1.8:C	EATON ELECTRIC	FAZ6-C10/3	0403856CEL

BOM internal panel

InternoQE_F01_003

Short name	Designation	Function text	Position	Manufacturer	Component tipe	Oracle code
QF4	Power circuit breaker	PROTECTION 4	=+QE/2.1:C	EATON ELECTRIC	FAZ6-C10/3	0403856CEL
QF5	Power circuit breaker	PROTECTION 5	=+QE/2.3:C	EATON ELECTRIC	FAZ6-C10/3	0403856CEL
QF6	Power circuit breaker	PROTECTION 6	=+QE/2.4:C	EATON ELECTRIC	FAZ6-C10/3	0403856CEL
QF21	Power circuit breaker	TRANSFORMER PROTECTION	=+QE/3.2:B	EATON ELECTRIC	FAZ6-C4/2	0403468AXX
QF22	Power circuit breaker	SECONDARY PROTECTION 24V	=+QE/3.2:G	EATON ELECTRIC	FAZ6-C4/1	0403824AXX
QF23	Power circuit breaker	230V SECONDARY PROTECTION	=+QE/3.3:G	EATON ELECTRIC	FAZ6-C2/1	0403819AXX
QS1	Disconnect switch	MAIN SWITCH	=+QE/1.1:E	SOCOMEC	Sirco M80	0402331AXX
QS1	Operation	=	=+QE/1.1:E	SOCOMEC	Y/R 16-80A	0402333AXX
RR1	Scaldiglia 200W 230V	HEATER E.P.	=+QE/6.4:D	EZM	091187	5729759AXX
ST1	SENSOR NTC WH IP68 -50T105 CABLE 1,5M	CABINET TEMPERATURE	=+QE/5.3:E	CAREL	NTC015WH01	NTC015WH01
TC1	TRANSFORMER	TRANSFORMER	=+QE/3.2:D		400V-230V 310VA//24V 60AV - 230V 250VA	0910244AXX

BOM external panel

EsternoQE_F01_003

Place	Short name	Function text	Position	Technical characteristics
+EXT	M1.1	Fan	=+QE/1.4:I	
+EXT	M2.1	=	=+QE/1.6:I	
+EXT	M3.1	=	=+QE/1.8:I	
+EXT	M4.1	=	=+QE/2.1:I	
+EXT	M5.1	=	=+QE/2.3:I	
+EXT	M6.1	=	=+QE/2.4:I	
+EXT	ST1	SIGNAL FOR FANS	=+QE/5.2:I	
+EXT	ST2	EXTERNAL AIR TEMP	=+QE/5.3:I	
+EXT	ST3	SIGNAL FOR FANS REGULATOR	=+QE/5.4:I	

alfa.luvegroup.com

Product code	CMAL0ME003	Rev	1
Project description	EP 8 FANS ALFA LU-VE DOUBLE GROUP WITH BOX STANDARD		

Supply voltage	3P+N+E - 400V - 50Hz	Operating temperature	40°C
Rated current	51A Icc 6KA		
Auxiliary voltage	24Vac/230Vac		

Designed by	Filippo Gregolin	on	27/06/2017
Checked by	Andrea Bacchin	on	27/06/2017
Approved by	Franco Meneghetti	on	27/06/2017

NOT ALLOWED DELIVER TO THIRD PARTIES OR REPRODUCE THIS DOCUMENT NOT USE THE CONTENT OR OTHERWISE MAKE KNOWN TO THIRD PARTIES WITHOUT OUR EXPRESS PERMISSION. ANY INFRINGEMENT WILL RESULT IN DAMAGES SUFFERED. And it MADE SUBJECT TO ALL RIGHTS UNDER PATENTS OR MODELS

Cables Range

Cross-sect	N07V-K Range (A)	N07G9 Range (A)
0,5	\	NOT AVAILABLE
0,75	\	NOT AVAILABLE
1	8A	12A
1,5	11A	16A
2,5	15A	22.4A
4	20A	29.6A
6	26A	38.4A
10	36A	52.8A
16	48A	70.4A
25	64A	93.6A
35	80A	115.2A
50	95A	140A
95	150A	177.6A
120	170A	215.2A
150	195A	NOT AVAILABLE
185	220A	NOT AVAILABLE
240	260A	NOT AVAILABLE
300	300A	NOT AVAILABLE

Colors Table

Colors	Short name
Red	RD
Black	BK
Yellow	YE
Yellow\Green	GNYE
Orange	OG
Light blue	TQ
Blue	BU
Pink	PK
White	WH
Gray	GY
Brown	BN
Green	GN
Purple	VT
\	
\	
\	
\	

REVIEW TABLE

Rev.	Technical name	Date	Note
01	Quaggia L.	29/01/2020	- -

Table of contents

F06_003

Page	Page type	Page description	Date	Edited by
/1	Title page / cover sheet	Title page	30/01/2020	Luca Quaggia
/2	Pre-planning	Technical information	30/01/2020	Luca Quaggia
/3	Table of contents	Table of contents	31/01/2020	Luca Quaggia
/4	Model view	General view	31/01/2020	Luca Quaggia
/5	Model view	View of all sides	31/01/2020	Luca Quaggia
/6	Model view	Mounting plate view	31/01/2020	Luca Quaggia
/7	Model view	Door view	31/01/2020	Luca Quaggia
/8	Model view	Guides view	31/01/2020	Luca Quaggia
/9	Model view	Channels view	31/01/2020	Luca Quaggia
/10	Model view	Bottom view	31/01/2020	Luca Quaggia
+QE/1	Schematic multi-line	Power circuit	30/01/2020	Luca Quaggia
+QE/2	Schematic multi-line	Power circuit	30/01/2020	Luca Quaggia
+QE/3	Schematic multi-line	Power circuit	30/01/2020	Luca Quaggia
+QE/4	Schematic multi-line	Auxiliary circuit	30/01/2020	Luca Quaggia
+QE/5	Schematic multi-line	Auxiliary circuit	30/01/2020	Luca Quaggia
+QE/5.a	Schematic multi-line	Auxiliary circuit	30/01/2020	Luca Quaggia
+QE/6	Schematic multi-line	Auxiliary circuit	30/01/2020	Luca Quaggia
+QE/7	Schematic multi-line	Auxiliary circuit	30/01/2020	Luca Quaggia
+QE/8	Schematic multi-line	Auxiliary circuit	30/01/2020	Luca Quaggia
+QE/9	Schematic multi-line	Auxiliary circuit	30/01/2020	Luca Quaggia
+QE/10	Schematic multi-line	Auxiliary circuit	30/01/2020	Luca Quaggia
+QE/11	Schematic multi-line	Auxiliary circuit	30/01/2020	Luca Quaggia
+QE/12	Graphic	Serial connection	30/01/2020	Luca Quaggia
+QE/13	Graphic	Certificazione	30/01/2020	Luca Quaggia
=REP1/1,0	Cable diagram	Multicore cables scheme	30/01/2020	Luca Quaggia
=REP1/1,1	Cable diagram	Multicore cables scheme	30/01/2020	Luca Quaggia
=REP1/1,2	Cable diagram	Multicore cables scheme	30/01/2020	Luca Quaggia
=REP1/1,3	Cable diagram	Multicore cables scheme	30/01/2020	Luca Quaggia
=REP1/2,0	Terminal diagram	Terminal strip	30/01/2020	Luca Quaggia
=REP1/2,0.a	Terminal diagram	Terminal strip	30/01/2020	Luca Quaggia
=REP1/2,1	Terminal diagram	Terminal strip	30/01/2020	Luca Quaggia
=REP1/3,0	Parts list	BOM internal panel	30/01/2020	Luca Quaggia
=REP1/3,0.a	Parts list	BOM internal panel	30/01/2020	Luca Quaggia
=REP1/4,0	Parts list	BOM external panel	30/01/2020	Luca Quaggia

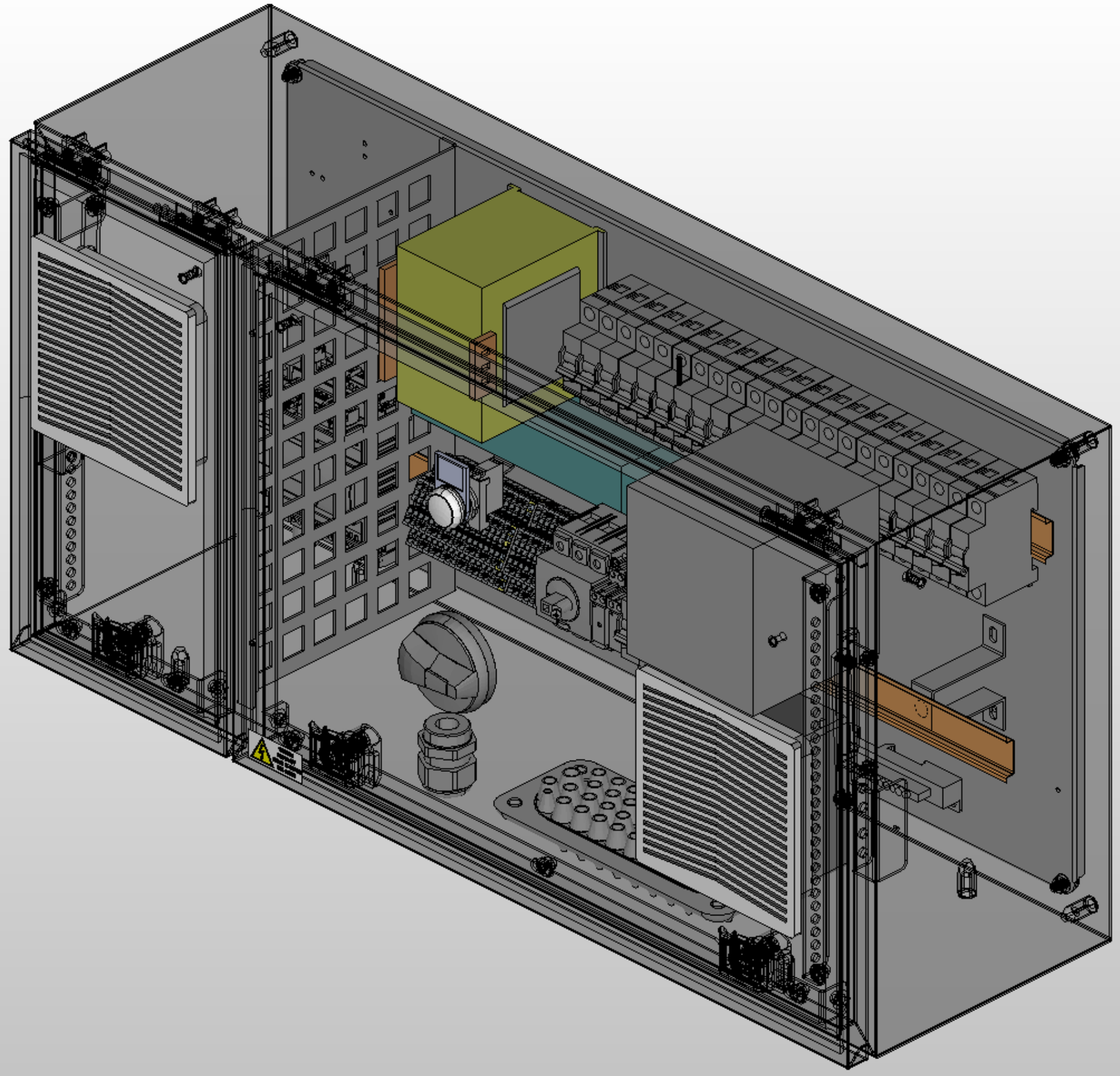

			Date	27/06/2017	CMAL0ME003	ALFA LU-VE	General view	Mounting locations +	Page /4
			Elab.	Filippo Gregolin	EP 8 FANS ALFA LU-VE DOUBLE GROUP WITH BOX STANDARD				Next 5
								Function =	Total pages 34
Modification	Date	Name							

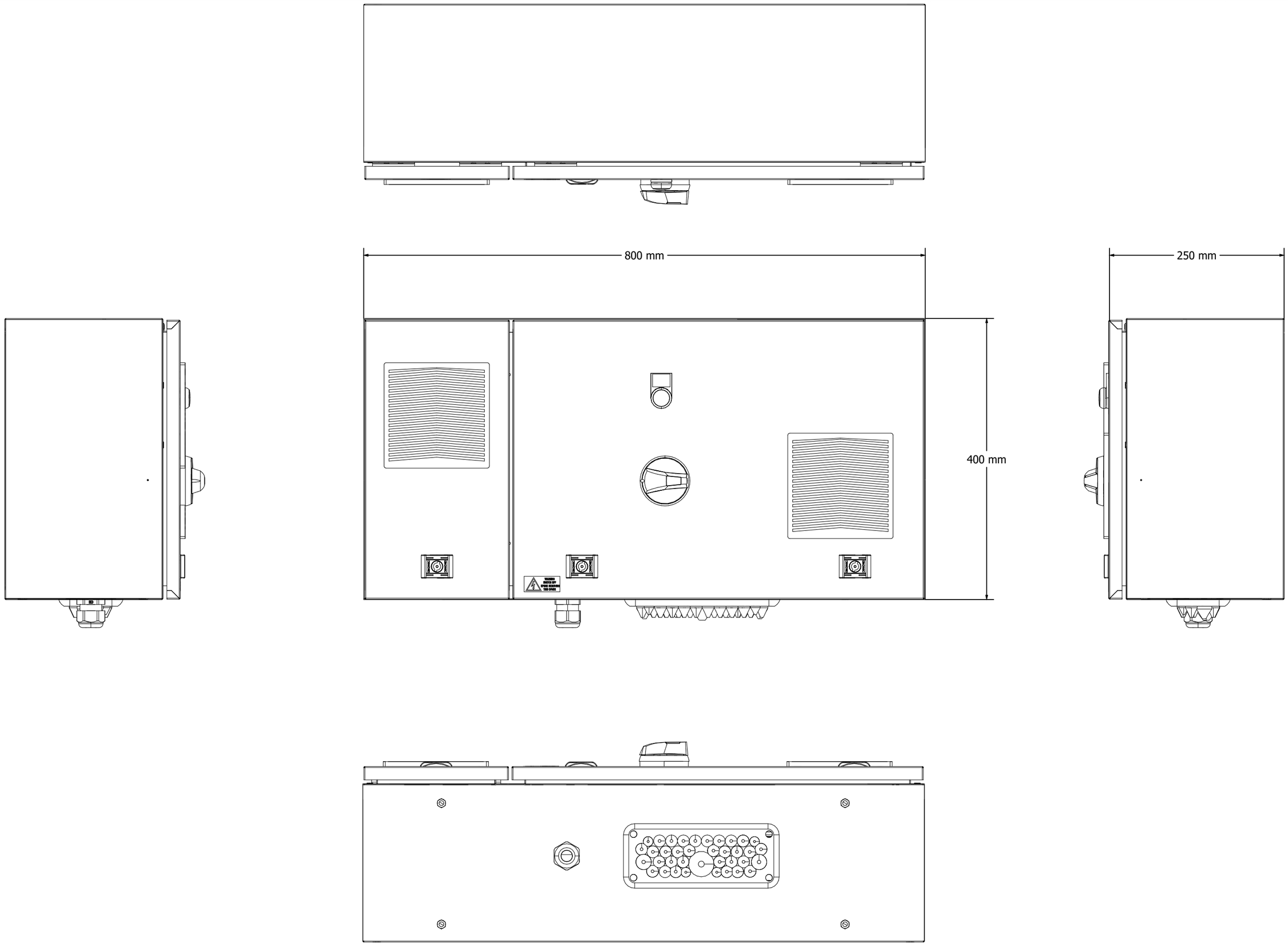

			Date	27/06/2017	CMAL0ME003	ALFA LU-VE	View of all sides	Mounting locations +	Page /5
			Elab.	Filippo Gregolin	EP 8 FANS ALFA LU-VE DOUBLE GROUP WITH BOX STANDARD				Next 6
Modification	Date	Name						Function =	Total pages 34

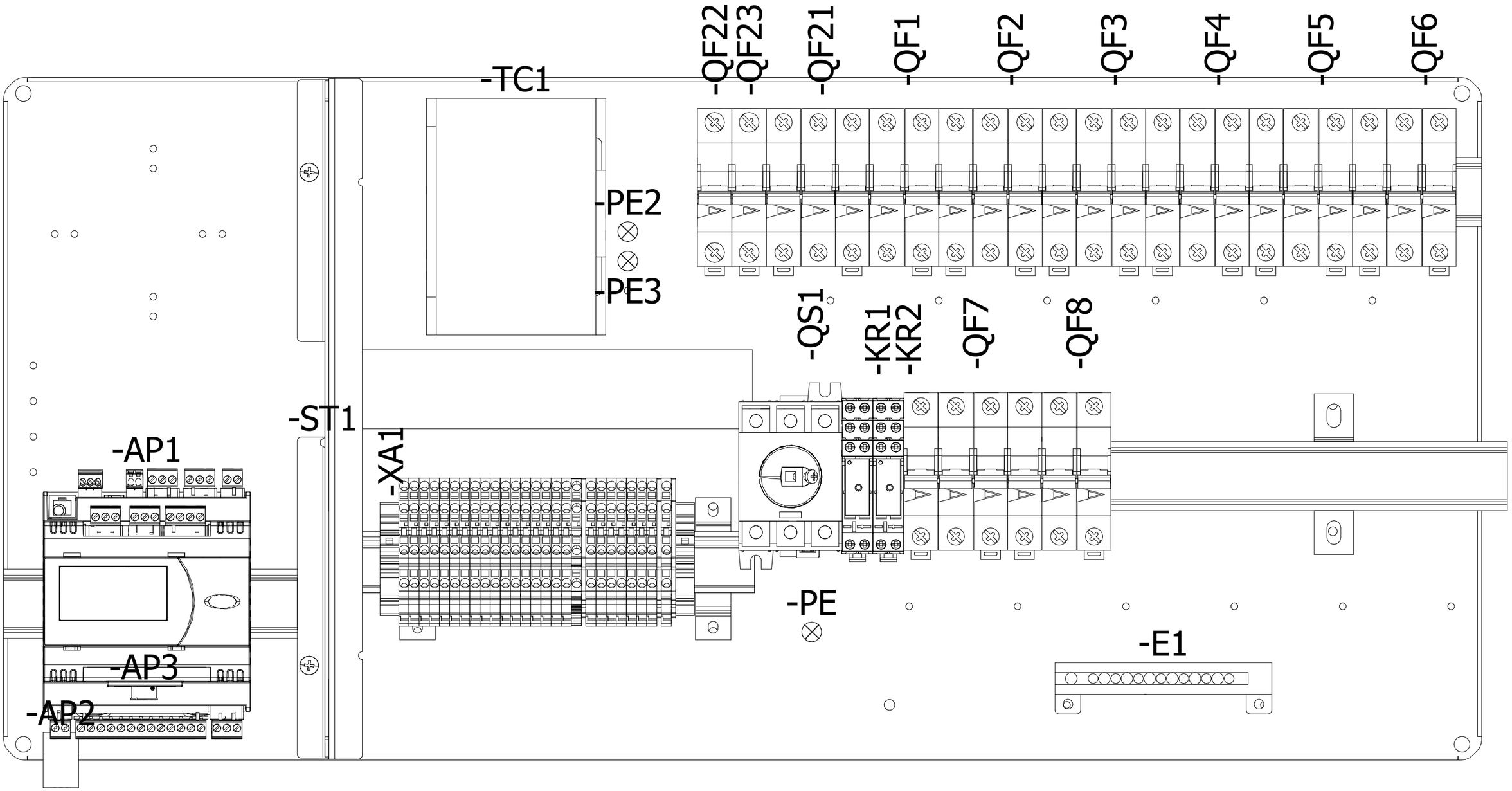

			Date	27/06/2017	CMAL0ME003	ALFA LU-VE	Mounting plate view	Mounting locations +	Page /6
			Elab.	Filippo Gregolin	EP 8 FANS ALFA LU-VE DOUBLE GROUP WITH BOX STANDARD			Function =	Next 7
Modification	Date	Name							Total pages 34

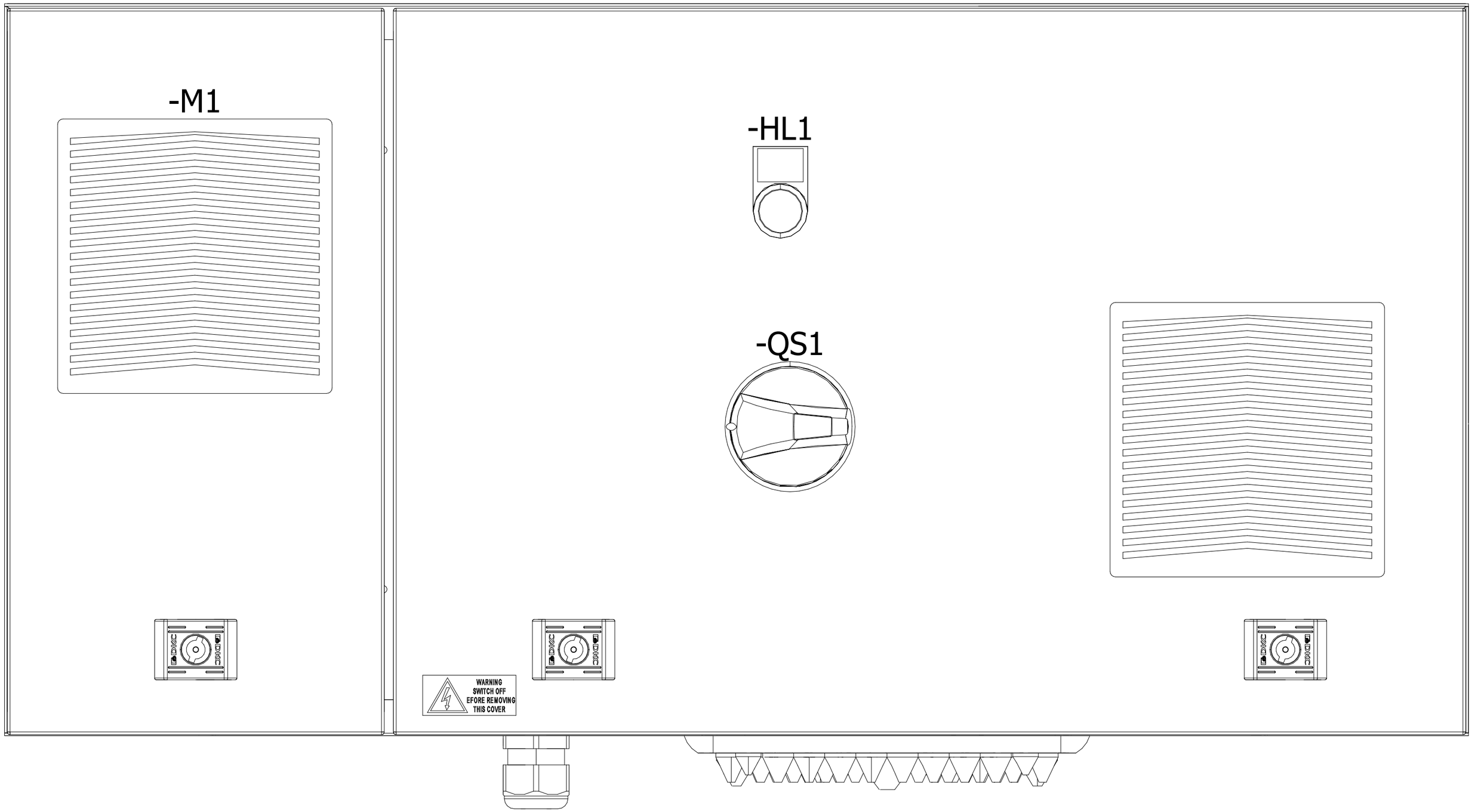

			Date	27/06/2017	CMAL0ME003	ALFA LU-VE	Door view	Mounting locations +	Page /7
			Elab.	Filippo Gregolin	EP 8 FANS ALFA LU-VE DOUBLE GROUP WITH BOX STANDARD				Next 8
								Function =	Total pages 34
Modification	Date	Name							

Layout guides and channels

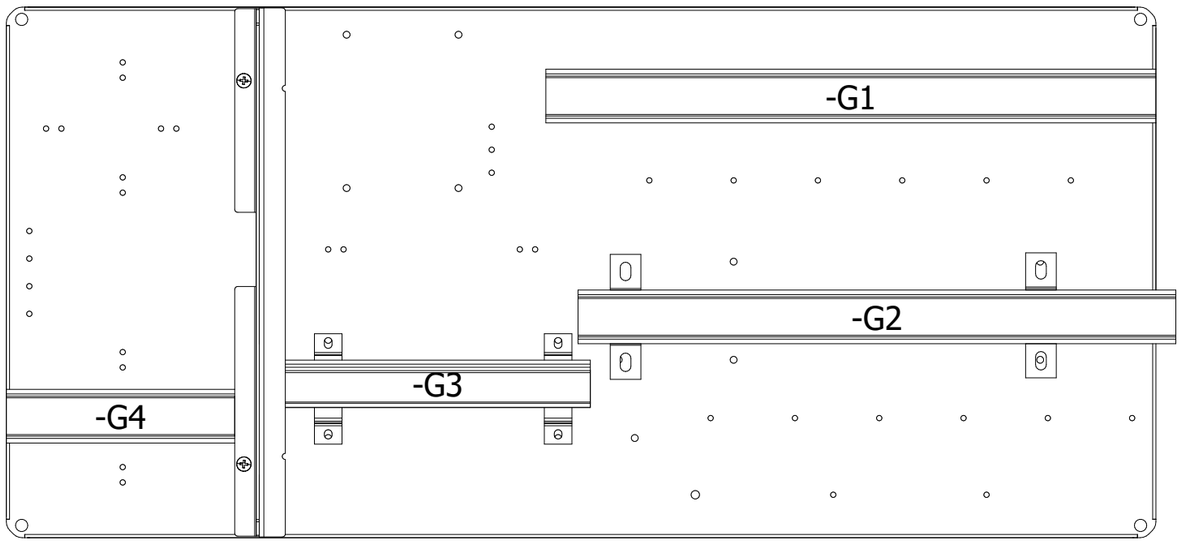

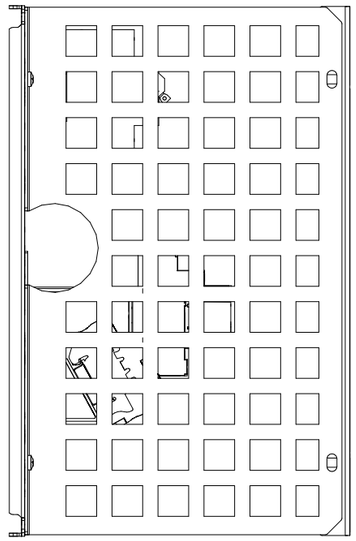

Sign	Type	Length (Tollerance -5mm)
U6	Inclined Bracket	
U7	Inclined Bracket	

G1	35x7.5	400 mm
G2	35x7.5	390 mm
G3	35x7.5	200 mm
G4	35x7.5	150 mm

U5	Support H=70mm	
U4	Support H=70mm	

U1	2cm Rise	
U2	2cm Rise	
U3	2cm Rise	

Empty

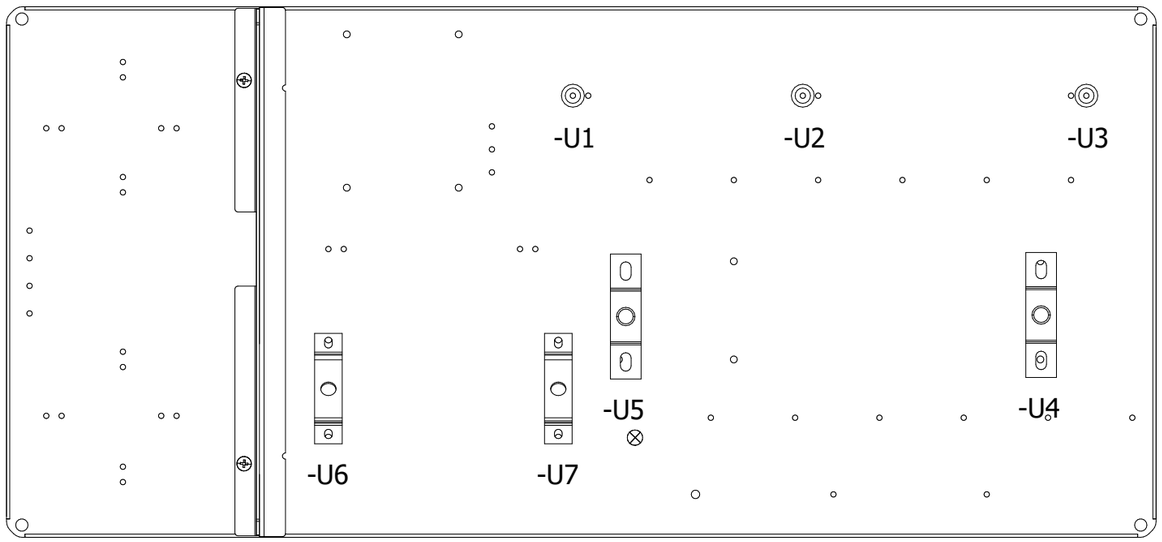

Empty

			Date	27/06/2017
			Elab.	Filippo Gregolin
Modification	Date	Name		

CMAL0ME003

EP 8 FANS ALFA LU-VE DOUBLE GROUP WITH BOX STANDARD

ALFA LU-VE

Guides view

Mounting locations +

Function =

Page /8

Next 9

Total pages 34

Layout guides and channels

Sign	Type	Length (Tollerance -5mm)
C1	40x60	205 mm

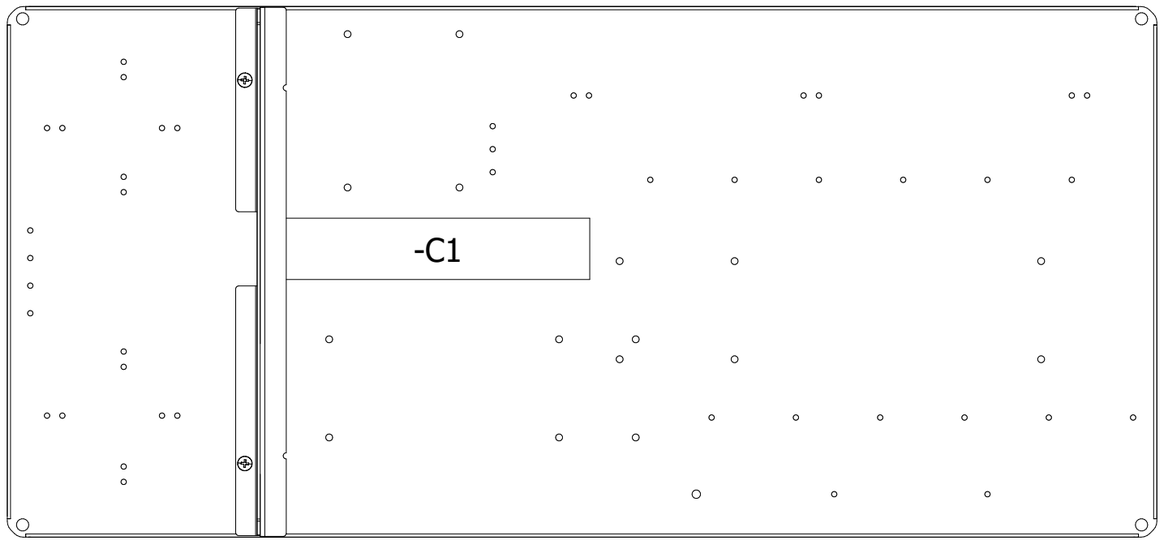

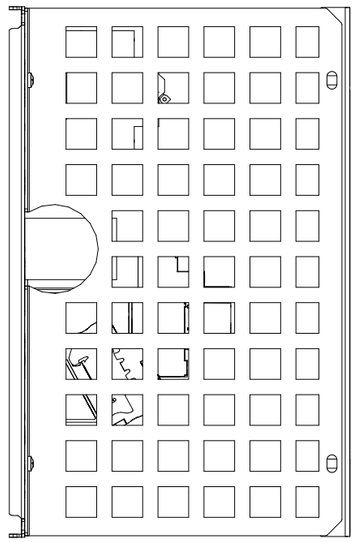

			Date	27/06/2017
			Elab.	Filippo Gregolin
Modification	Date	Name		

CMAL0ME003

EP 8 FANS ALFA LU-VE DOUBLE GROUP WITH BOX STANDARD

Channels view

Mounting locations +

Function =

Page /9

Next 10

Total pages 34

Cable entry/exit components

Item number	Component tipe	Drilling (Tollerance +-0.5mm)
1	M32 Gland	Ø 32.5mm
2	Passacavo multiforo	

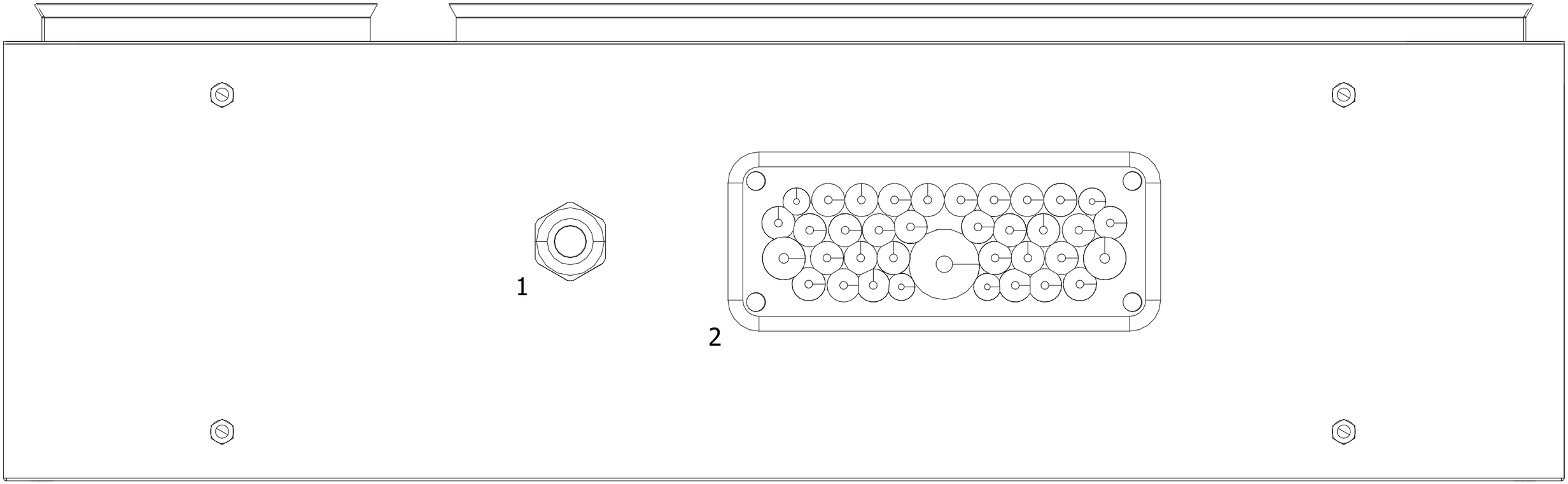

			Date	27/06/2017
			Elab.	Filippo Gregolin
Modification	Date	Name		

CMAL0ME003

EP 8 FANS ALFA LU-VE DOUBLE GROUP WITH BOX STANDARD

Bottom view

Mounting locations +

Function =

Page /10

Next +QE/1

Total pages 34

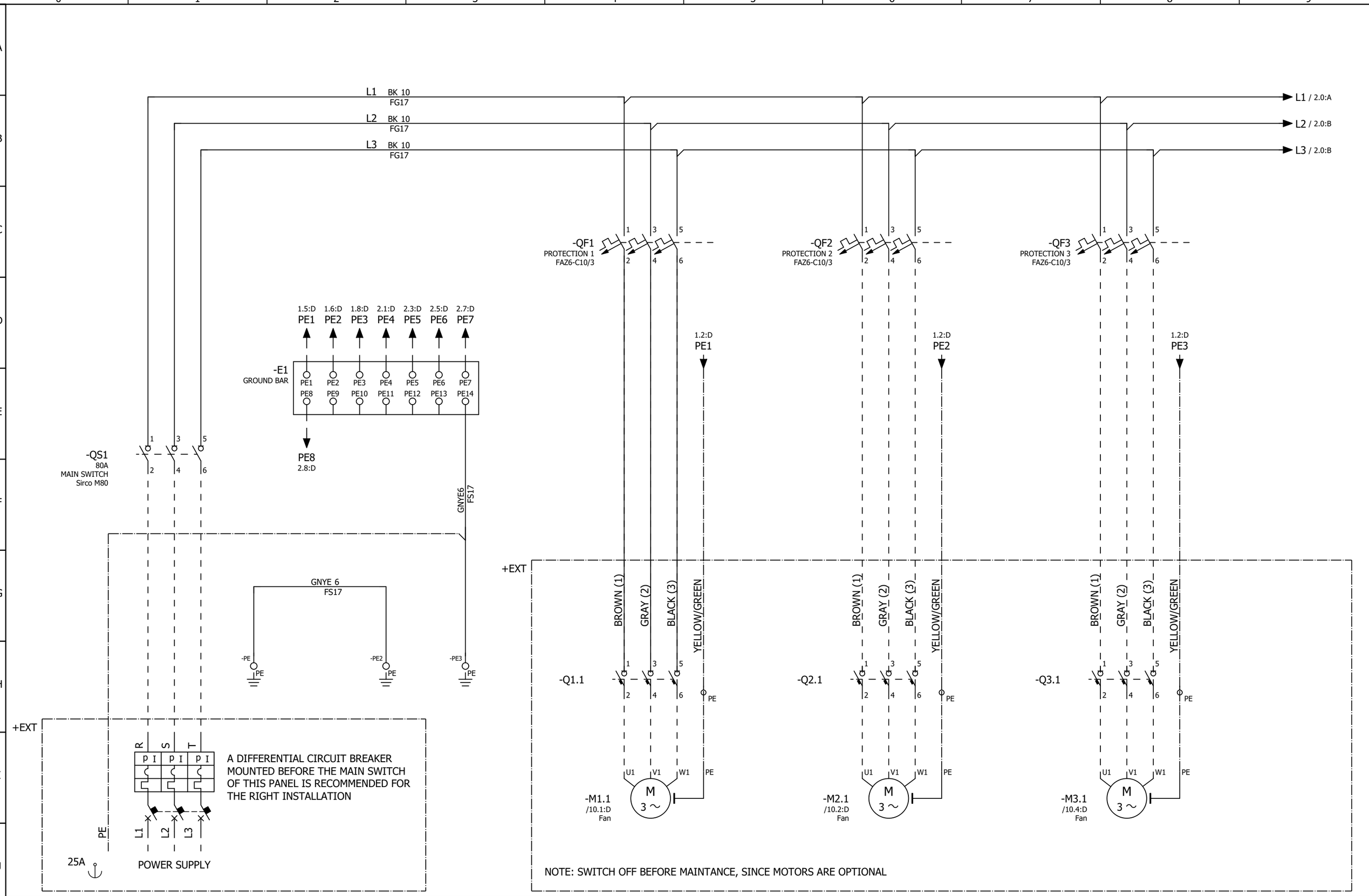

			Date	27/06/2017
			Elab.	Filippo Gregolin
Modification	Date	Name		

CMAL0ME003

EP 8 FANS ALFA LU-VE DOUBLE GROUP WITH BOX STANDARD

ALFA LU-VE

Power circuit

Mounting locations + QE

Function =

Page +QE/1

Next 2

Total pages 34

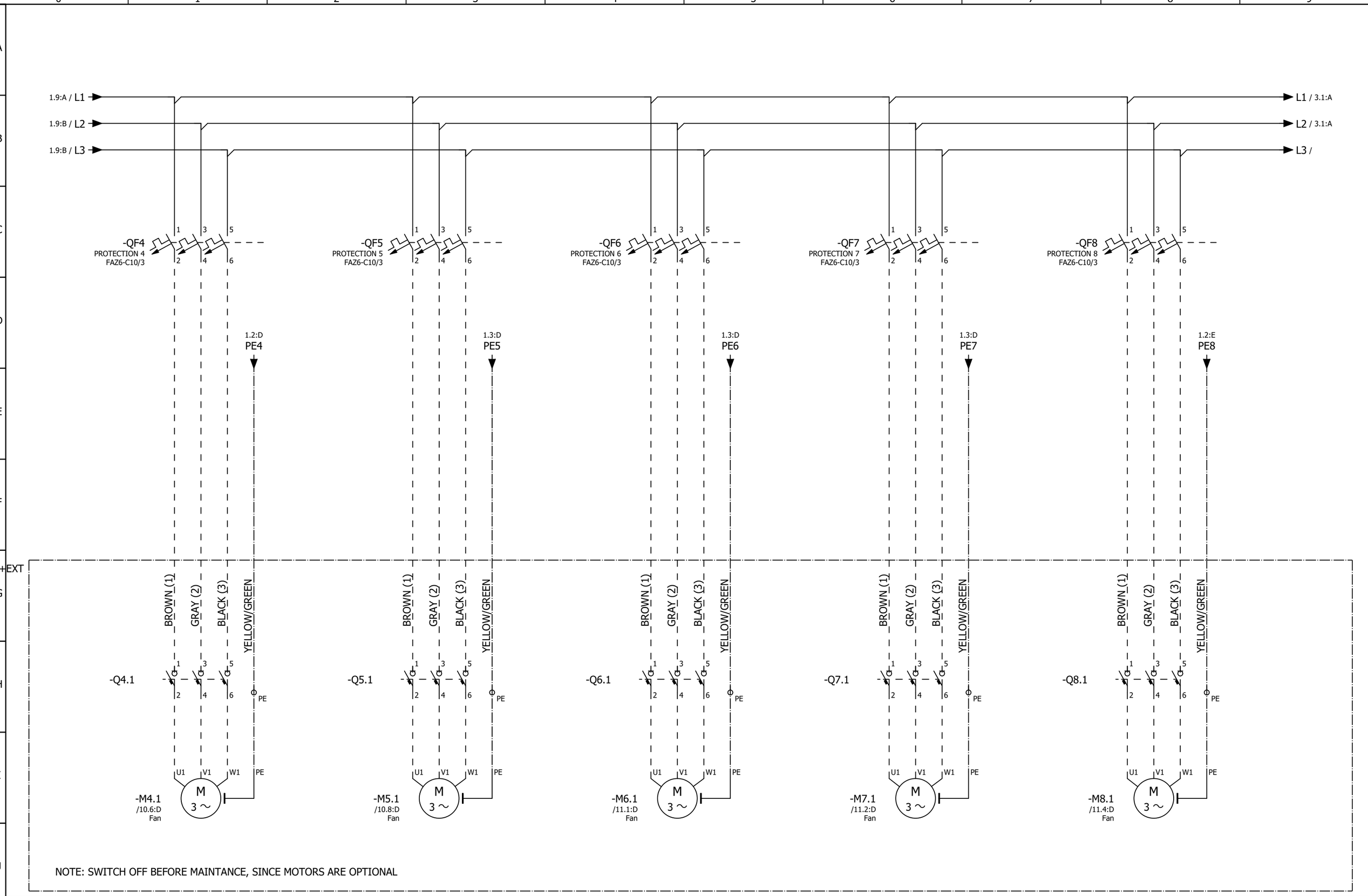

			Date	27/06/2017
			Elab.	Filippo Gregolin
Modification	Date	Name		

CMAL0ME003

EP 8 FANS ALFA LU-VE DOUBLE GROUP WITH BOX STANDARD

ALFA LU-VE

Power circuit

Mounting locations + QE

Function =

Page +QE/2

Next 3

Total pages 34

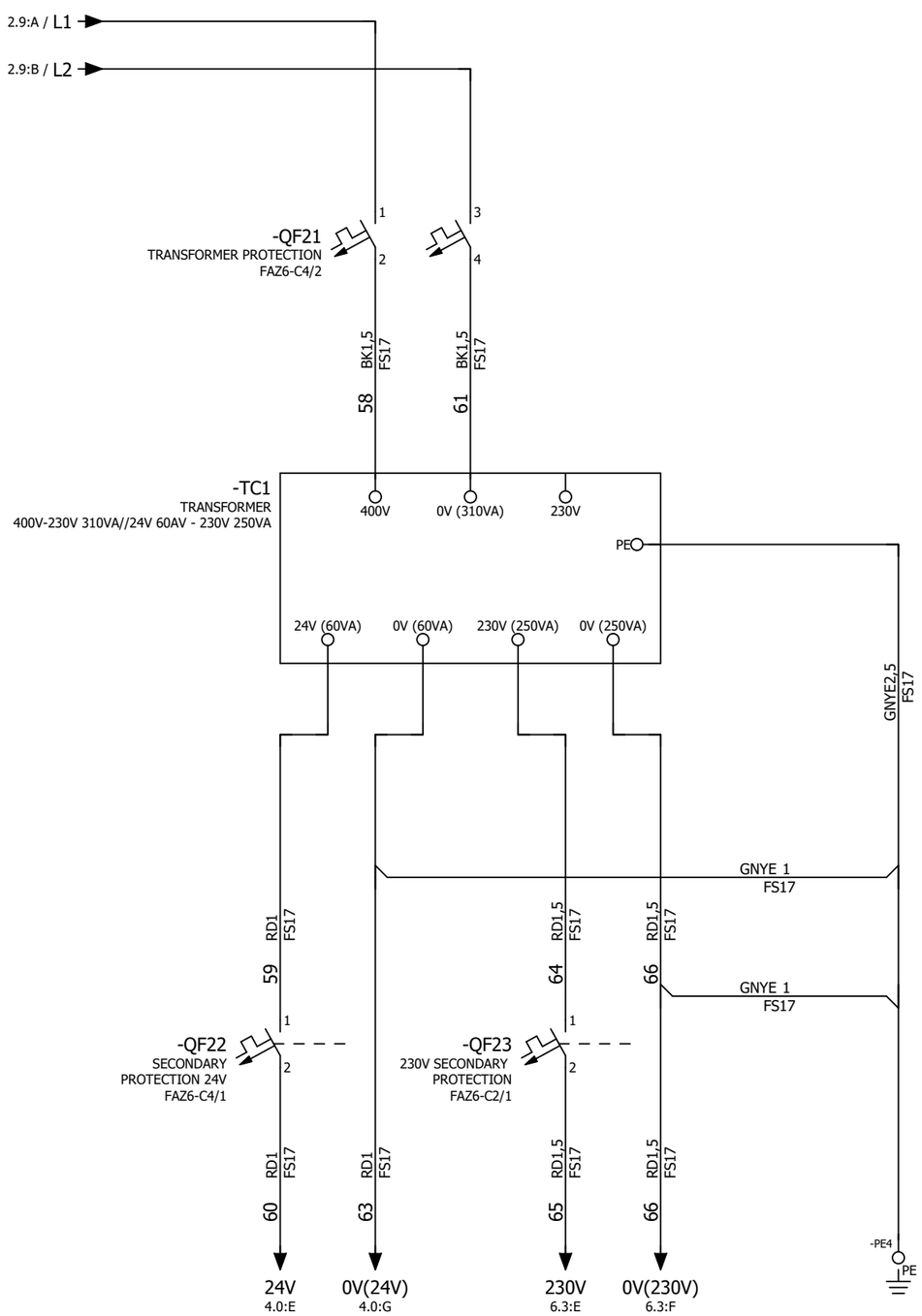

			Date	27/06/2017	CMAL0ME003	ALFA LU-VE	Power circuit	Mounting locations + QE	Page +QE/3
			Elab.	Filippo Gregolin	EP 8 FANS ALFA LU-VE DOUBLE GROUP WITH BOX STANDARD			Function =	Next 4
Modification	Date	Name							Total pages 34

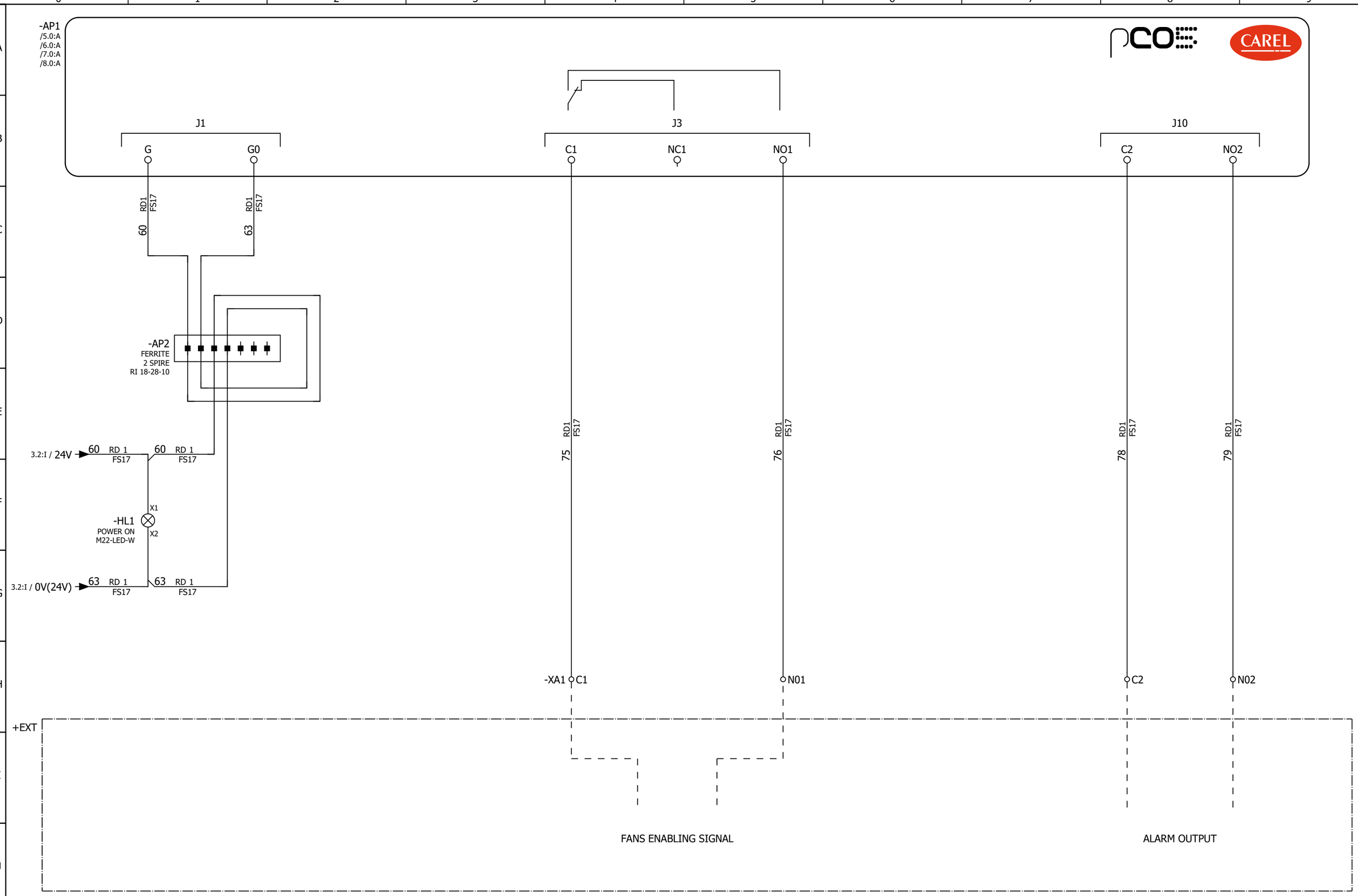

			Date	27/06/2017
			Elab.	Filippo Gregolin
Modification	Date	Name		

CMAL0ME003

EP 8 FANS ALFA LU-VE DOUBLE GROUP WITH BOX STANDARD

Auxiliary circuit

Mounting locations + QE

Function =

Page +QE/4

Next 5

Total pages 34

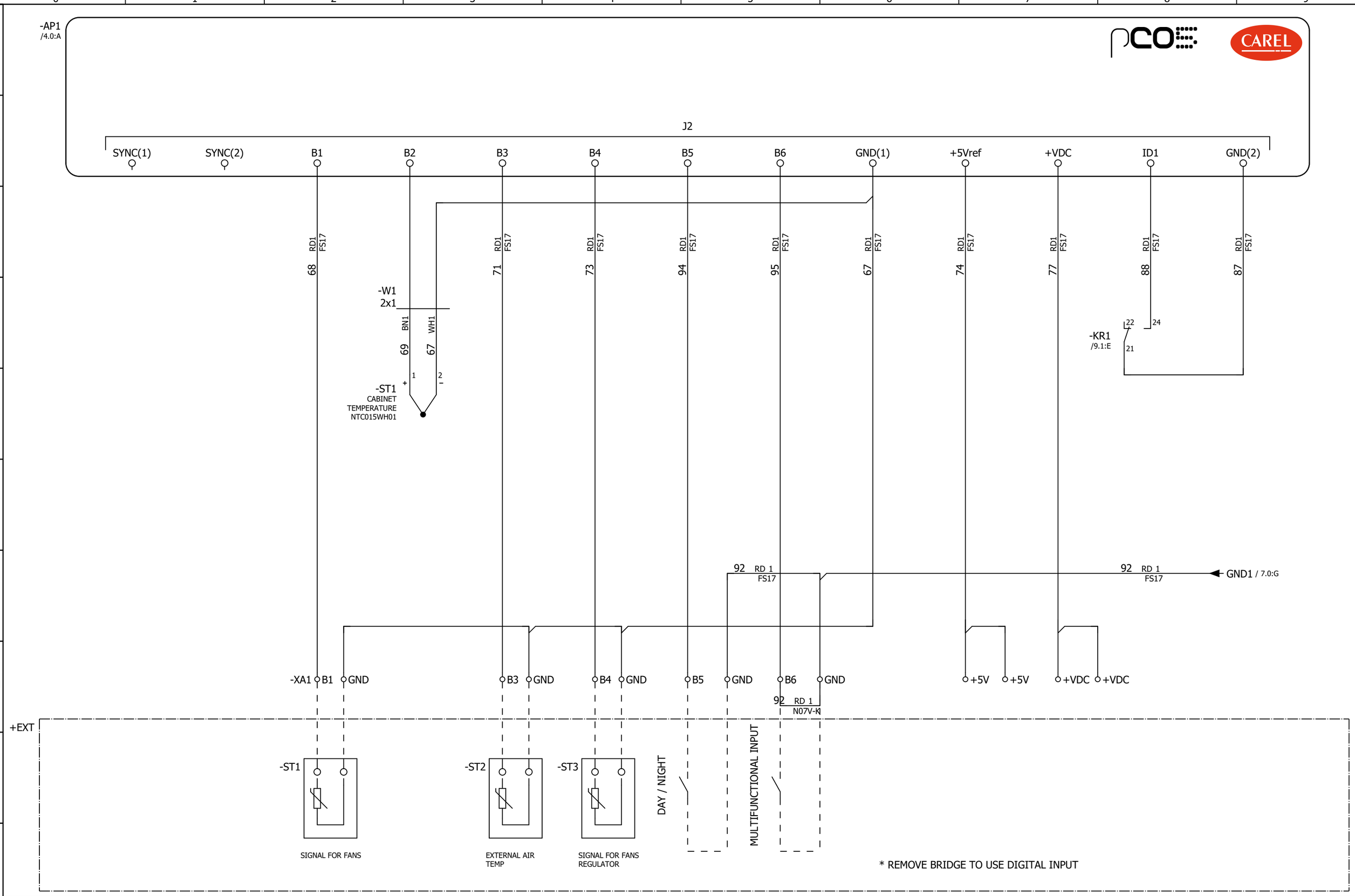

			Date	27/06/2017
			Elab.	Filippo Gregolin
Modification	Date	Name		

CMAL0ME003

EP 8 FANS ALFA LU-VE DOUBLE GROUP WITH BOX STANDARD

Auxiliary circuit

Mounting locations + QE

Function =

Page +QE/5

Next 5.a

Total pages 34

NO PT1000
B1 SIGNAL FOR FANS (NTC)
B2 E.P. TEMPERATURE (NTC)
B3 EXTERNAL AIR TEMPERATURE (NTC)
B4 ----------

WITH PT1000
B1 ----------
B2 E.P. TEMPERATURE (NTC)
B3 EXTERNAL AIR TEMPERATURE (NTC)
B4 SIGNAL FOR FANS (PT1000)

PROBE CONNECTIONS

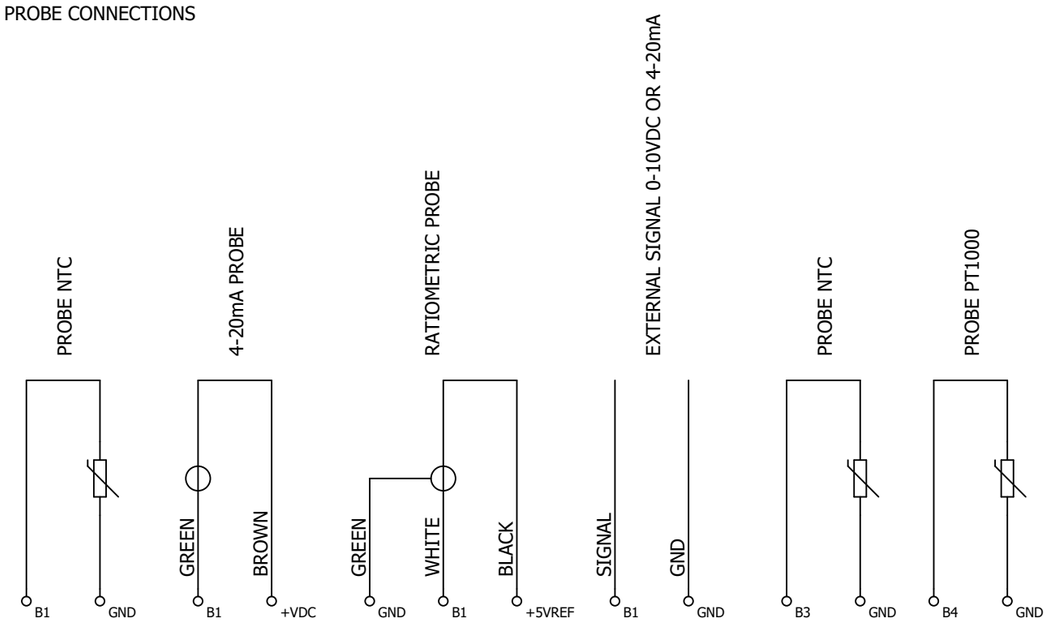

			Date	27/06/2017
			Elab.	Filippo Gregolin
Modification	Date	Name		

CMAL0ME003

EP 8 FANS ALFA LU-VE DOUBLE GROUP WITH BOX STANDARD

ALFA LU-VE

Auxiliary circuit

Mounting locations + QE

Function =

Page +QE/5.a

Next 6

Total pages 34

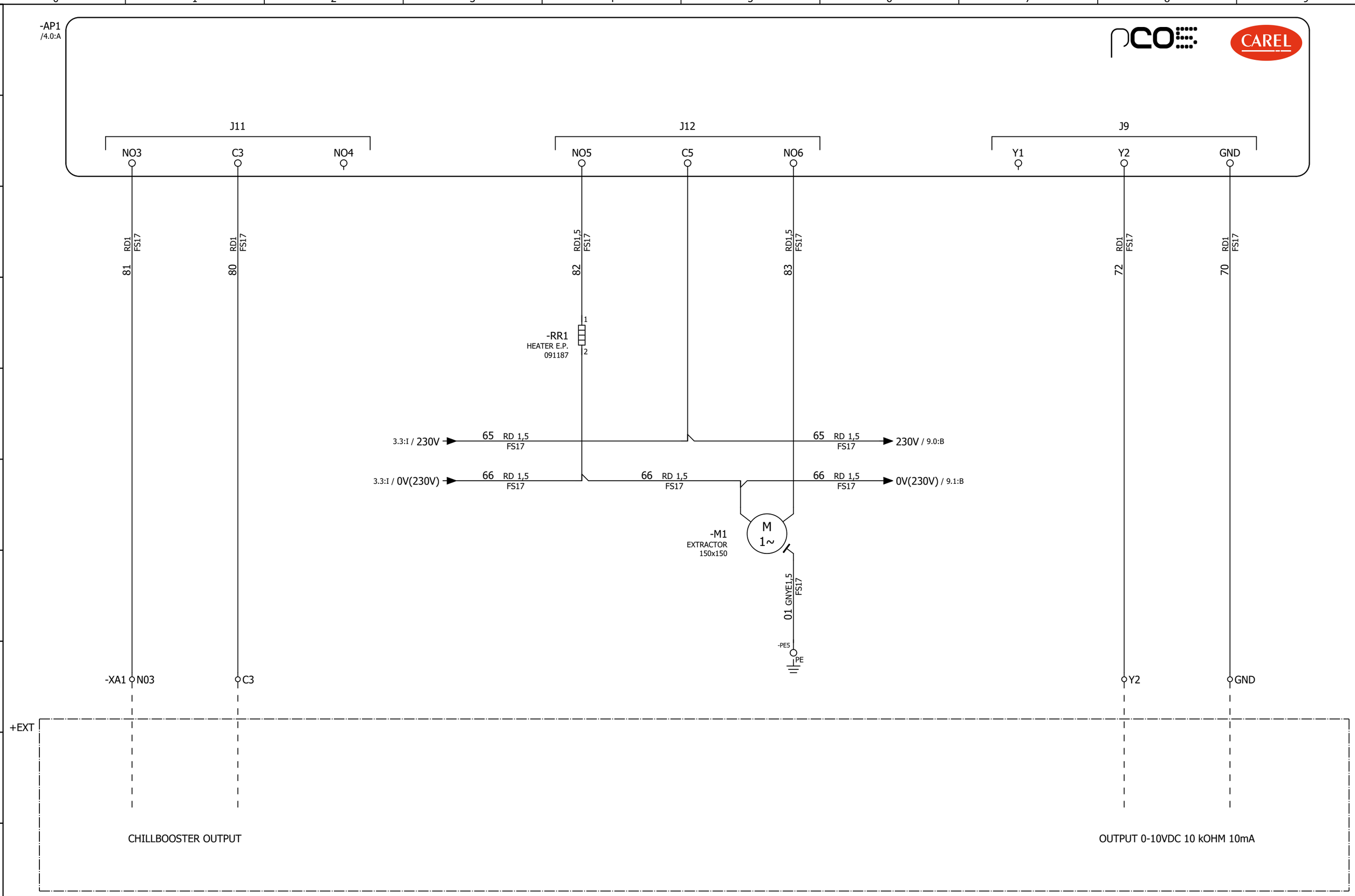

			Date	27/06/2017
			Elab.	Filippo Gregolin
Modification	Date	Name		

CMAL0ME003

EP 8 FANS ALFA LU-VE DOUBLE GROUP WITH BOX STANDARD

Auxiliary circuit

Mounting locations + QE

Function =

Page +QE/6

Next 7

Total pages 34

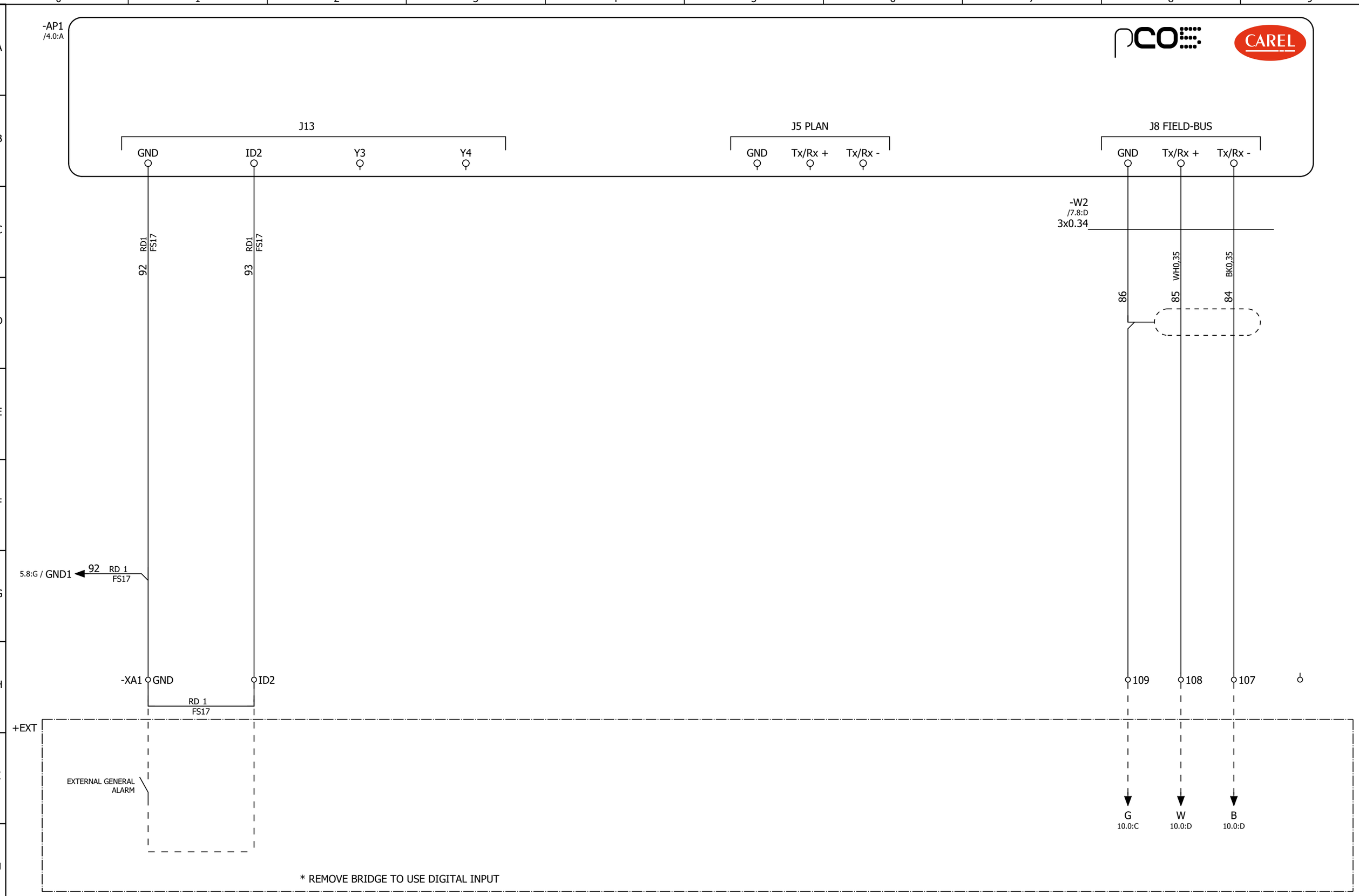

			Date	27/06/2017
			Elab.	Filippo Gregolin
Modification	Date	Name		

CMAL0ME003

EP 8 FANS ALFA LU-VE DOUBLE GROUP WITH BOX STANDARD

Auxiliary circuit

Mounting locations + QE

Function =

Page +QE/7

Next 8

Total pages 34

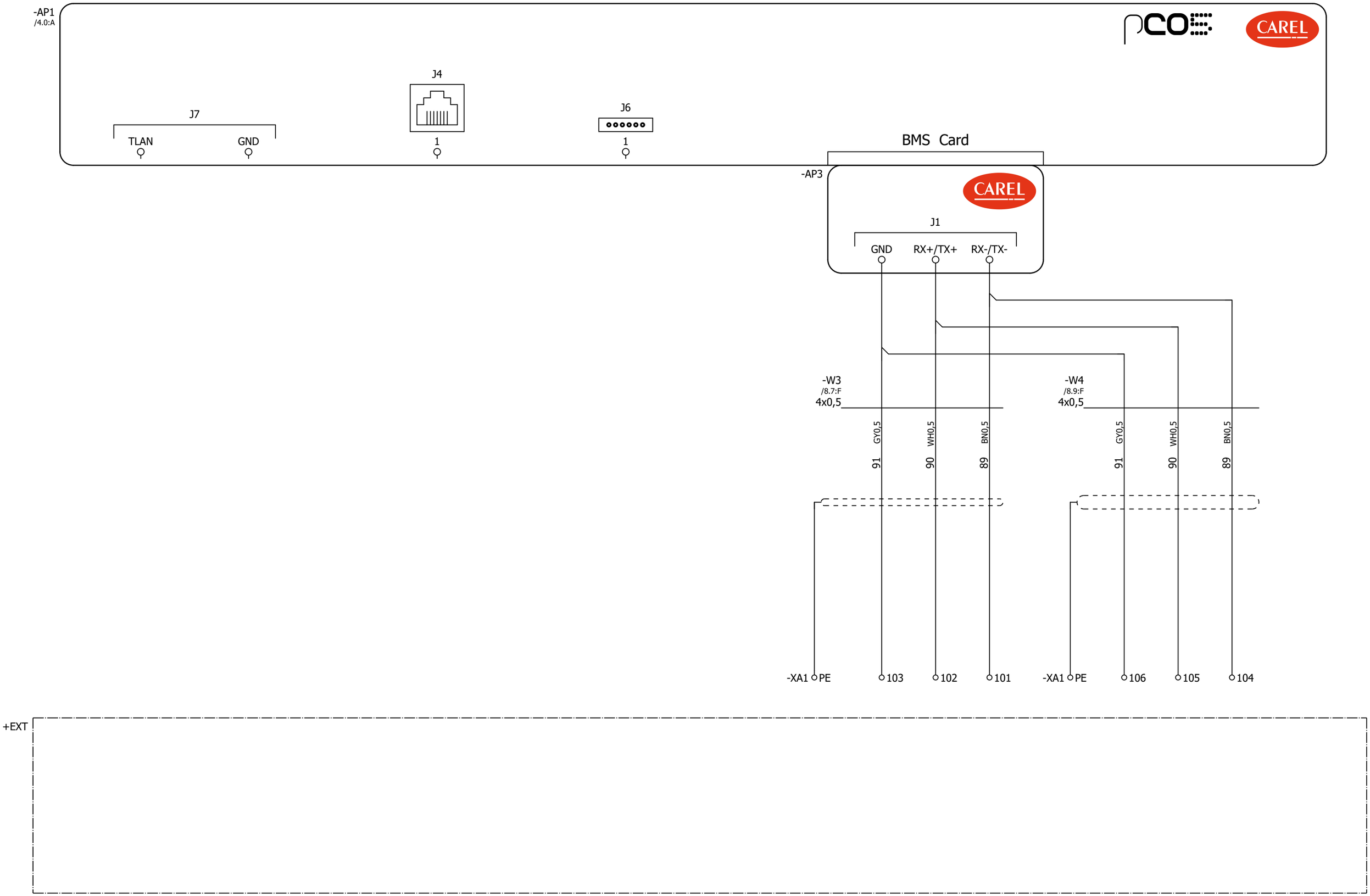

			Date	27/06/2017
			Elab.	Filippo Gregolin
Modification	Date	Name		

CMAL0ME003

EP 8 FANS ALFA LU-VE DOUBLE GROUP WITH BOX STANDARD

Auxiliary circuit

Mounting locations + QE

Function =

Page +QE/8

Next 9

Total pages 34

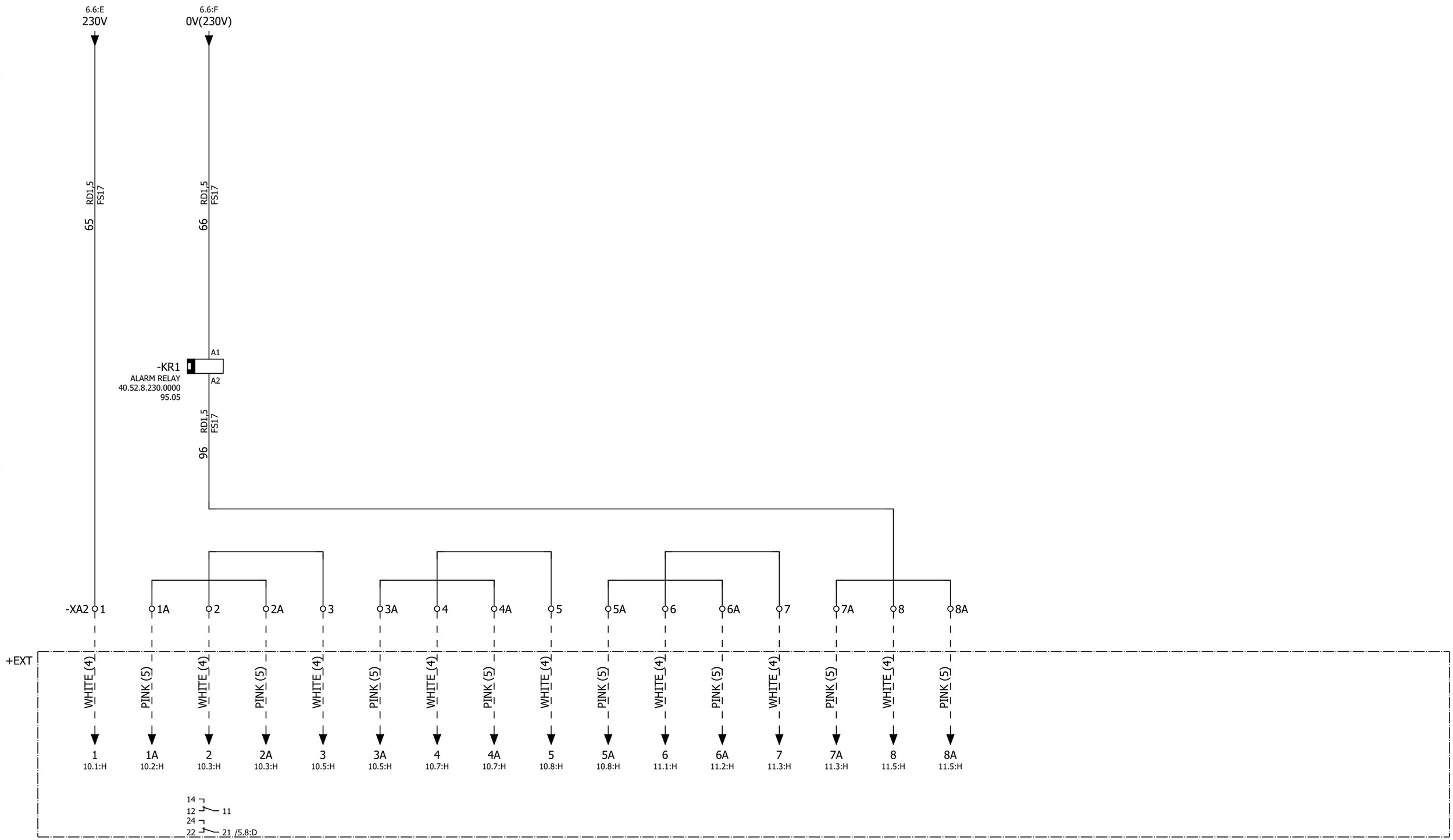

			Date	27/06/2017
			Elab.	Filippo Gregolin
Modification	Date	Name		

CMAL0ME003

EP 8 FANS ALFA LU-VE DOUBLE GROUP WITH BOX STANDARD

ALFA LU-VE

Auxiliary circuit

Mounting locations + QE

Function =

Page +QE/9

Next 10

Total pages 34

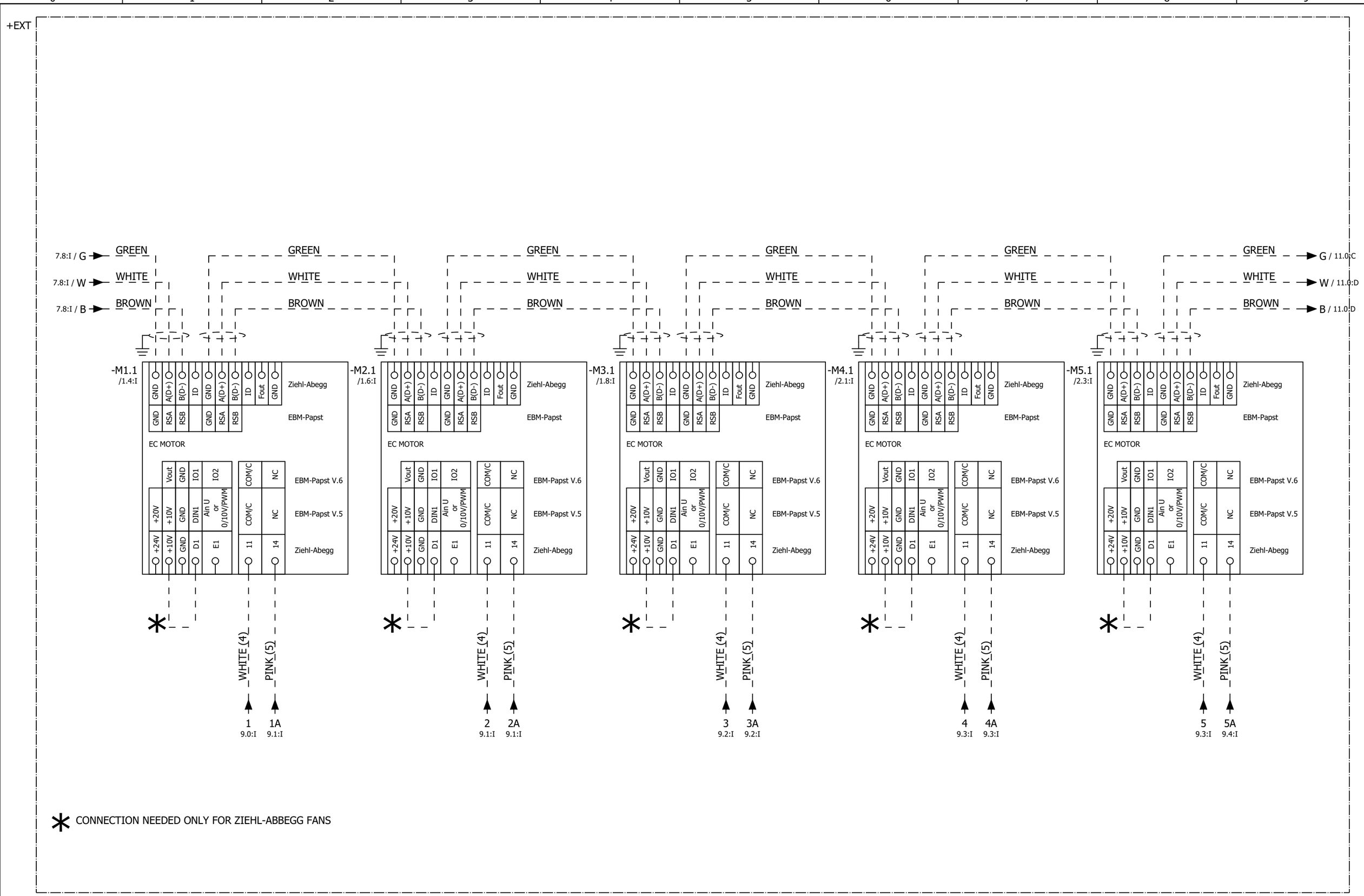

* CONNECTION NEEDED ONLY FOR ZIEHL-ABBEGG FANS

			Date	27/06/2017	CMAL0ME003	ALFA LU-VE	Auxiliary circuit	Mounting locations + QE
			Elab.	Filippo Gregolin	EP 8 FANS ALFA LU-VE DOUBLE GROUP WITH BOX STANDARD			Function =
Modification	Date	Name						

Page	+QE/10
Next	11
Total pages	34

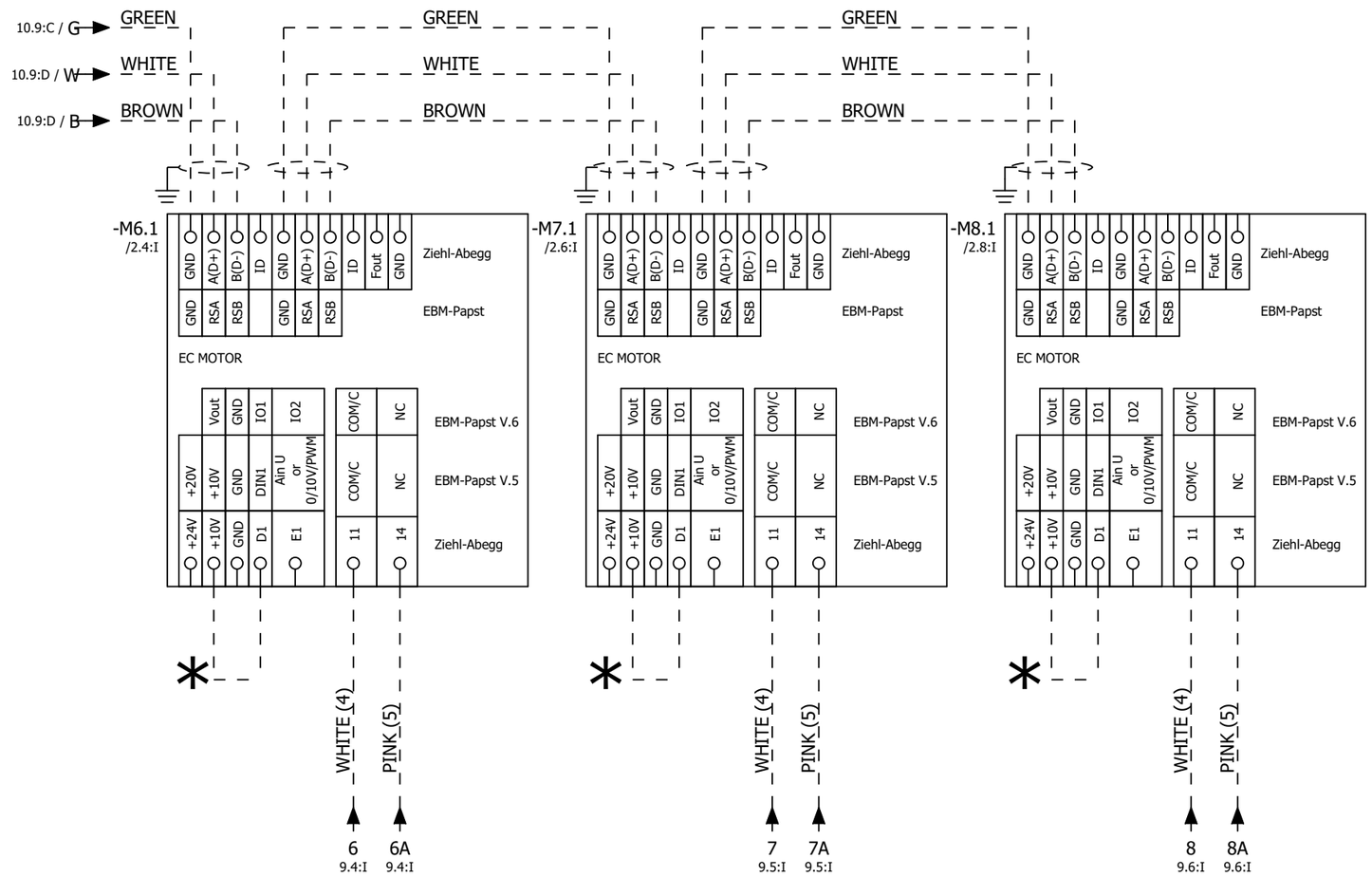

* CONNECTION NEEDED ONLY FOR ZIEHL-ABBEGG FANS

			Date	27/06/2017
			Elab.	Filippo Gregolin
Modification	Date	Name		

CMAL0ME003

EP 8 FANS ALFA LU-VE DOUBLE GROUP WITH BOX STANDARD

ALFA LU-VE

Auxiliary circuit

Mounting locations + QE

Function =

Page +QE/11

Next 12

Total pages 34

8 FAN MOTORS

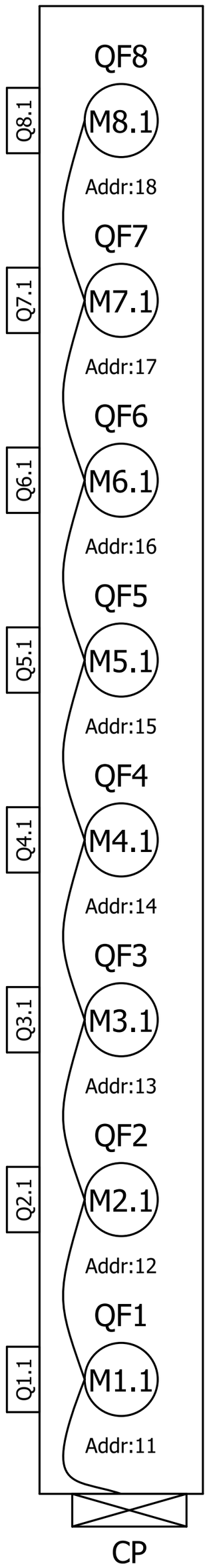

Page	+QE/12		
Next	13		
Total pages	34		
Mounting locations	+ QE		
Function	=		

Serial connection

CMAL0ME003

EP 8 FANS ALFA LU-VE DOUBLE GROUP WITH BOX STANDARD

Date	27/06/2017	
Elab.	Filippo Gregolin	
Modification	Date	Name

CAREL INDUSTRIES S.p.A. - Società Unipersonale
Via dell'Industria, 11 - 35020 Brugine – Padova – Italia
Tel. (+39) 049.9716611 – Fax (+39) 049.9716600
www.carel.com – e-mail: carel@carel.com

Cap. Soc. € 10.000.000 i.v.
C.C.I.A.A. Padova Reg. Imp n. 4359090281
Part. IVA e Cod. Fisc. 04359090281
Società soggetta ad attività di direzione e coordinamento di Carel S.p.A.

CE

EU Declaration of Conformity

Manufacturer: **CAREL Industries S.p.A.**
Via dell'Industria, 11 35020 Brugine (PD) Italy

Electric Control Panels series Carel Power Solutions
Code :
Serial number:

CMAL0ME003 / CMAL0ME006

The manufacturer declares that all the above indicated products are in accordance with the EU Directives:

2006/95/EC (LVD)

and comply with the requirements of the following European standards:

EN 60204-1

Brugine, 27/06/2017

CAREL INDUSTRIES S.p.A.
Technical Director

Ing. Umberto Bianchini

Modification	Date	Name		Date	27/06/2017
				Elab.	Filippo Gregolin

CMAL0ME003
EP 8 FANS ALFA LU-VE DOUBLE GROUP WITH BOX STANDARD

Certificazione

Function	=	Mounting locations	+ QE	Page	+QE/13
				Next	=REP1+/1,0
Total pages	34				

Multicore cables scheme

Cable type PROBE CABLE

Oracle code PROBE CABLE

Total Cable Length Cut:

Departure | Cross ref. | Terminator

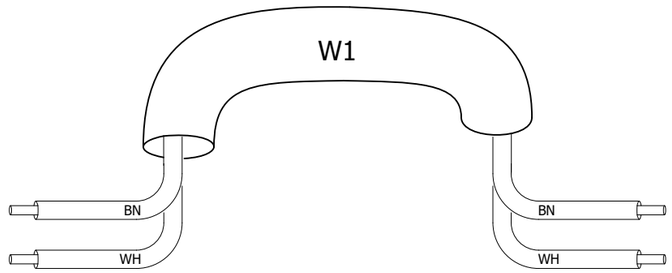

Terminator | Cross ref. | Arrival

Unsheathing cable departure

Unsheathing cable arrival

			Date	27/06/2017
			Elab.	Filippo Gregolin
Modification	Date	Name		

CMAL0ME003

EP 8 FANS ALFA LU-VE DOUBLE GROUP WITH BOX STANDARD

ALFA LU-VE

Multicore cables scheme

Mounting locations +

Function =REP1

Page =REP1/1,0

Next 1,1

Total pages 34

Multicore cables scheme

Cable type Belden

Oracle code 1008176AXX

Total Cable Length Cut:

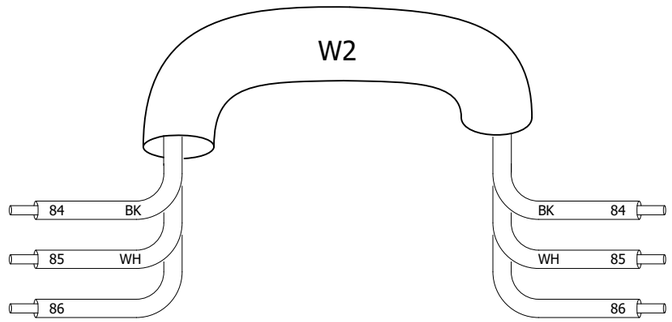

Departure	Cross ref.	Terminator	Terminator	Cross ref.	Arrival
XA1:107:A	+QE/7.8:H			+QE/7.8:B	+QE-AP1:J8 FIELD-BUS:Tx/Rx -
XA1:108:B	+QE/7.8:H			+QE/7.8:B	+QE-AP1:J8 FIELD-BUS:Tx/Rx +
XA1:109:A	+QE/7.8:H			+QE/7.8:B	+QE-AP1:J8 FIELD-BUS:GND

Unsheathing cable departure

Unsheathing cable arrival

			Date	27/06/2017	CMAL0ME003	ALFA LU-VE	Multicore cables scheme	Mounting locations +	Page =REP1/1,1
			Elab.	Filippo Gregolin	EP 8 FANS ALFA LU-VE DOUBLE GROUP WITH BOX STANDARD				Next 1,2
								Function =REP1	Total pages 34
Modification	Date	Name							

Multicore cables scheme

Cable type Shielded 3x0.5

Oracle code 1008019AXX

Total Cable Length Cut:

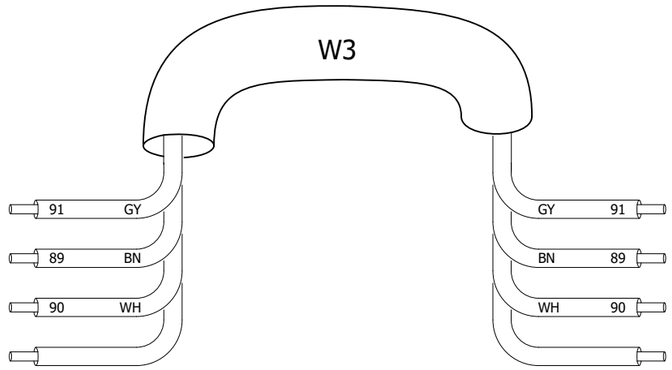

Departure	Cross ref.	Terminator	Terminator	Cross ref.	Arrival
XA1:103:A	+QE/8.6:H			+QE/8.6:C	+QE-AP3:J1:GND
XA1:101:A	+QE/8.7:H			+QE/8.7:C	+QE-AP3:J1:RX-/TX-
XA1:102:B	+QE/8.6:H			+QE/8.6:C	+QE-AP3:J1:RX+/TX+

Unsheathing cable departure

Unsheathing cable arrival

			Date	27/06/2017
			Elab.	Filippo Gregolin
Modification	Date	Name		

CMAL0ME003

EP 8 FANS ALFA LU-VE DOUBLE GROUP WITH BOX STANDARD

ALFA LU-VE

Multicore cables scheme

Mounting locations +

Function =REP1

Page =REP1/1,2

Next 1,3

Total pages 34

Multicore cables scheme

Cable type Shielded 3x0.5

Oracle code 1008019AXX

Total Cable Length Cut:

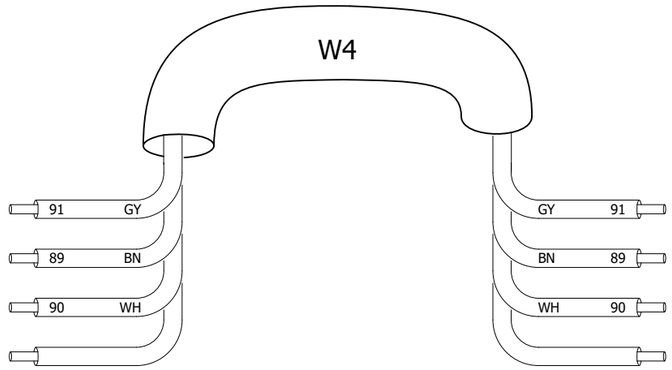

Departure	Cross ref.	Terminator	Terminator	Cross ref.	Arrival
XA1:106:B	+QE/8.8:H			+QE/8.6:C	+QE-AP3:J1:GND
XA1:104:B	+QE/8.8:H			+QE/8.7:C	+QE-AP3:J1:RX-/TX-
XA1:105:A	+QE/8.8:H			+QE/8.6:C	+QE-AP3:J1:RX+/TX+

Unsheathing cable departure

Unsheathing cable arrival

			Date	27/06/2017
			Elab.	Filippo Gregolin
Modification	Date	Name		

CMAL0ME003

EP 8 FANS ALFA LU-VE DOUBLE GROUP WITH BOX STANDARD

ALFA LU-VE

Multicore cables scheme

Mounting locations +

Function =REP1

Page =REP1/1,3

Next 2,0

Total pages 34

Terminal diagram

Terminal strip

XA1

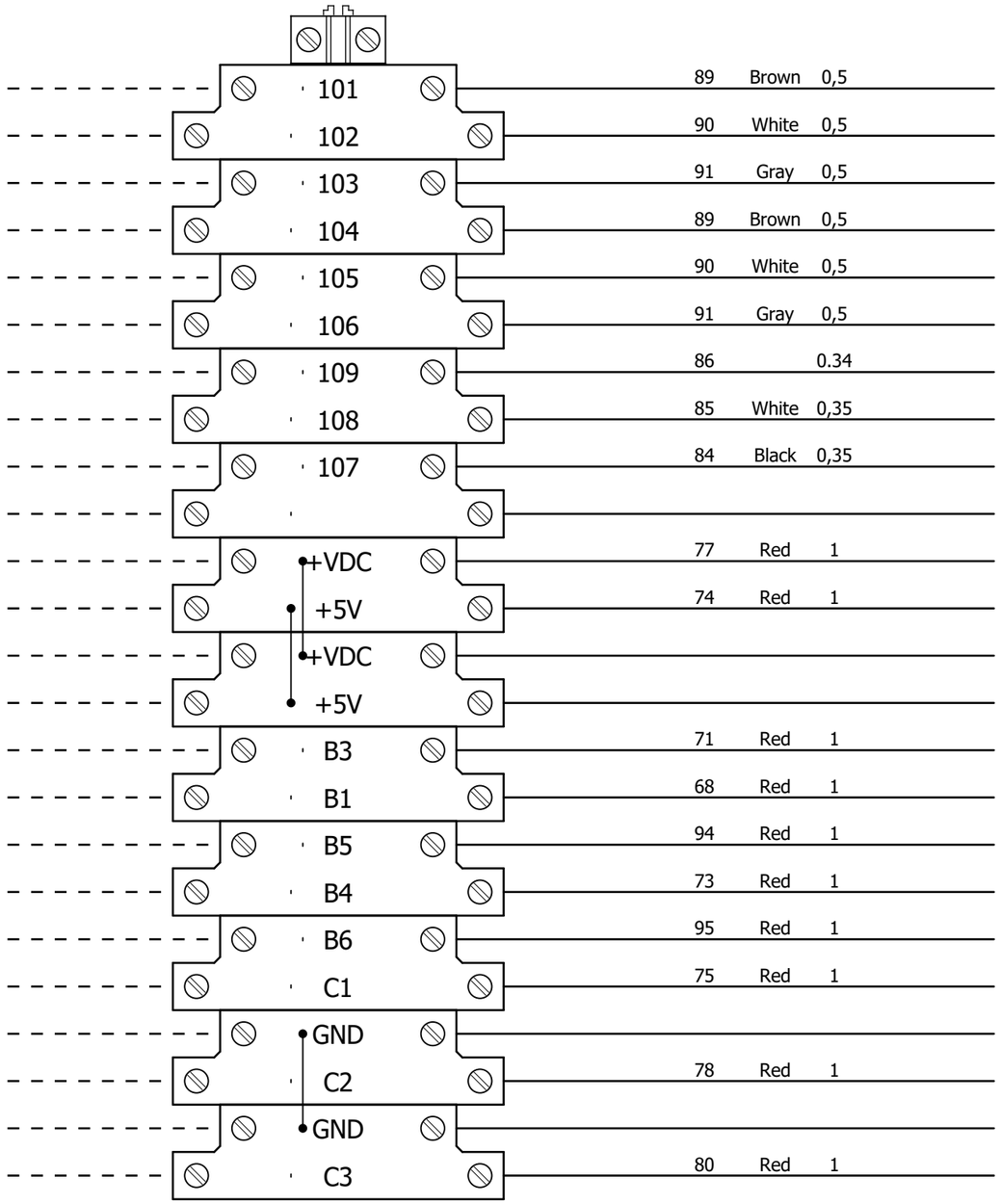

External targets	Teminal type	Terminal position on the drawings
	STTB 2,5	+QE/8.7:H
		+QE/8.6:H
	STTB 2,5	+QE/8.6:H
		+QE/8.8:H
	STTB 2,5	+QE/8.8:H
		+QE/8.8:H
	STTB 2,5	+QE/7.8:H
		+QE/7.8:H
	STTB 2,5	+QE/7.8:H
		+QE/7.9:H
	STTB 2,5	+QE/5.7:H
		+QE/5.7:H
	STTB 2,5	+QE/5.8:H
		+QE/5.7:H
	STTB 2,5	+QE/5.3:H
		+QE/5.2:H
	STTB 2,5	+QE/5.5:H
		+QE/5.4:H
	STTB 2,5	+QE/5.5:H
		+QE/4.4:H
	STTB 2,5	+QE/5.2:H
		+QE/4.8:H
	STTB 2,5	+QE/5.3:H
		+QE/6.1:H

Terminal diagram

Terminal strip

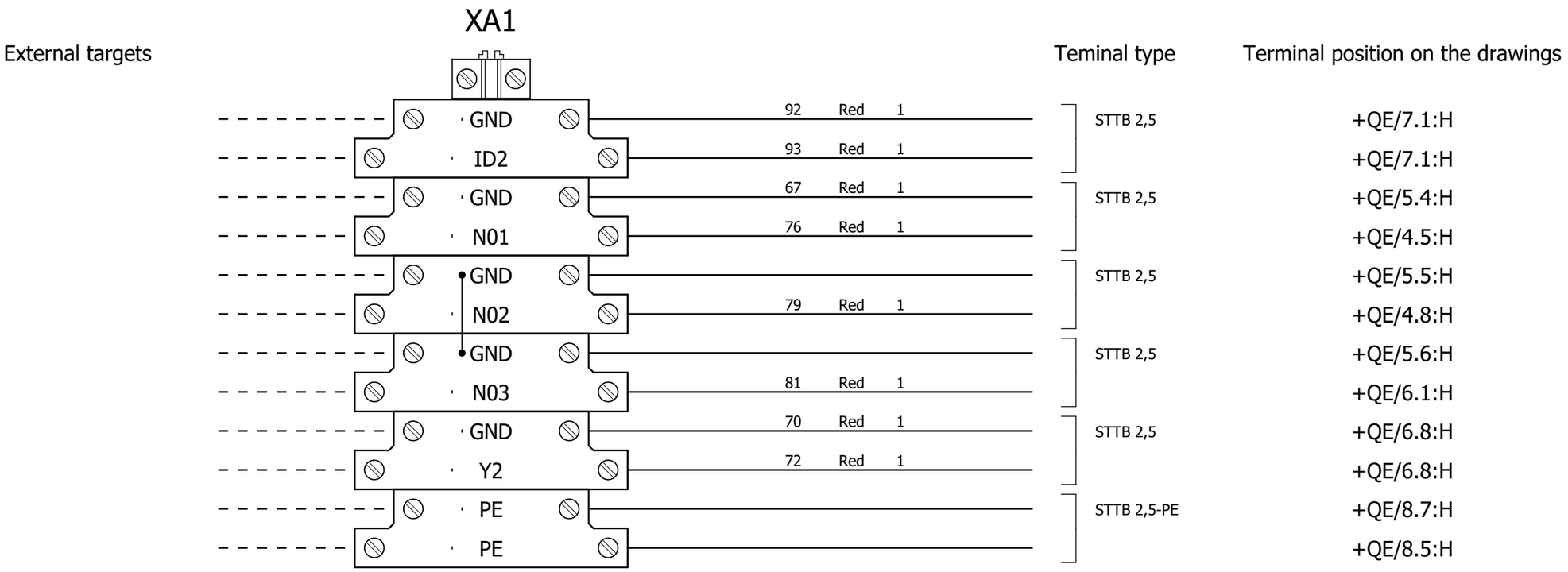

			Date	27/06/2017	CMAL0ME003	ALFA LU-VE	Terminal strip	Mounting locations +	Page =REP1/2,0.a
			Elab.	Filippo Gregolin	EP 8 FANS ALFA LU-VE DOUBLE GROUP WITH BOX STANDARD				Next 2,1
Modification	Date	Name						Function =REP1	Total pages 34

Terminal diagram

Terminal strip

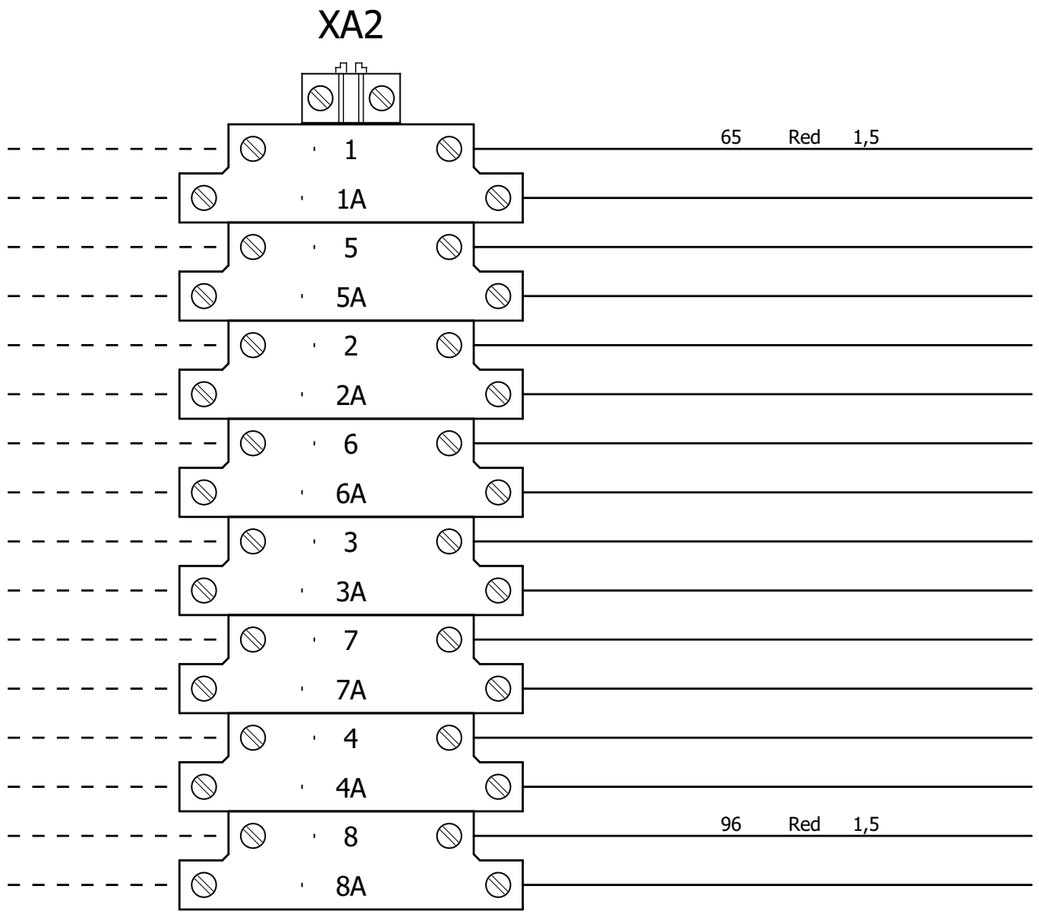

External targets	Teminal type	Terminal position on the drawings
	STTB 2,5	+QE/9.0:H
		+QE/9.1:H
	STTB 2,5	+QE/9.3:H
		+QE/9.4:H
	STTB 2,5	+QE/9.1:H
		+QE/9.1:H
	STTB 2,5	+QE/9.4:H
		+QE/9.4:H
	STTB 2,5	+QE/9.2:H
		+QE/9.2:H
	STTB 2,5	+QE/9.5:H
		+QE/9.5:H
	STTB 2,5	+QE/9.3:H
		+QE/9.3:H
	STTB 2,5	+QE/9.6:H
		+QE/9.6:H

BOM internal panel

InternoQE_F01_003

Short name	Designation	Function text	Position	Manufacturer	Component tipe	Oracle code
AP1	Programmable control		=+QE/4.0:A	CAREL	PCO Compact	PCOXLV0DB0
AP2	Damping magnet, M 5.0	FERRITE 2 SPIRE	=+QE/4.1:D	KE-KITAGAWA	FERRITE CORE	0907877AXX
AP3	Scheda seriale BMS		=+QE/8.6:B	CAREL	Scheda seriale BMS	PCOS004850
E1	Earth terminal	GROUND BAR	=+QE/1.2:D	SCHNEIDER ELECTRIC	14977	2217096CEL
HL1	White lamp 24Vac	POWER ON	=+QE/4.1:F	EATON ELECTRIC	M22-LED-W	0505103CEL
HL1	Plate	=	=+QE/4.1:F	CEMBRE	15X27	1800243AXX
HL1	Support plate	=	=+QE/4.1:F	CEMBRE	D22 17X30	1800242AXX
HL1	Glass plate	=	=+QE/4.1:F	CEMBRE	15X27	1800244AXX
HL1	Support	=	=+QE/4.1:F	EATON ELECTRIC	M22-A	0505184AXX
HL1	White indicator plate	=	=+QE/4.1:F	EATON ELECTRIC	216771	0505111CEL
KR1	Relay	ALARM RELAY	=+QE/9.1:E	FINDER	40.52.8.230.0000	0100751CEL
KR1	Base element	=	=+QE/9.1:E	FINDER	95.05	5931384AXX
KR2	Base element		(Quadro elettri co)	FINDER	95.05	5931384AXX
KR2	Relay		(Quadro elettri co)	FINDER	40.52.8.230.0000	0100751CEL
M1	Internal fan	EXTRACTOR	=+QE/6.5:F	EZM	150x150	1312697AXX
PE	GROUND		=+QE/1.1:H		PE	PE
PE2	GROUND		=+QE/1.2:H		PE	PE
PE3	GROUND		=+QE/1.3:H		PE	PE
PE4	GROUND		=+QE/3.4:H		PE	PE
PE5	GROUND		=+QE/6.5:G		PE	PE
QF1	Power circuit breaker	PROTECTION 1	=+QE/1.4:C	EATON ELECTRIC	FAZ6-C10/3	0403856CEL
QF2	Power circuit breaker	PROTECTION 2	=+QE/1.6:C	EATON ELECTRIC	FAZ6-C10/3	0403856CEL
QF3	Power circuit breaker	PROTECTION 3	=+QE/1.8:C	EATON ELECTRIC	FAZ6-C10/3	0403856CEL

BOM internal panel

InternoQE_F01_003

Short name	Designation	Function text	Position	Manufacturer	Component tipe	Oracle code
QF4	Power circuit breaker	PROTECTION 4	=+QE/2.1:C	EATON ELECTRIC	FAZ6-C10/3	0403856CEL
QF5	Power circuit breaker	PROTECTION 5	=+QE/2.3:C	EATON ELECTRIC	FAZ6-C10/3	0403856CEL
QF6	Power circuit breaker	PROTECTION 6	=+QE/2.4:C	EATON ELECTRIC	FAZ6-C10/3	0403856CEL
QF7	Power circuit breaker	PROTECTION 7	=+QE/2.6:C	EATON ELECTRIC	FAZ6-C10/3	0403856CEL
QF8	Power circuit breaker	PROTECTION 8	=+QE/2.8:C	EATON ELECTRIC	FAZ6-C10/3	0403856CEL
QF21	Power circuit breaker	TRANSFORMER PROTECTION	=+QE/3.2:B	EATON ELECTRIC	FAZ6-C4/2	0403468AXX
QF22	Power circuit breaker	SECONDARY PROTECTION 24V	=+QE/3.2:G	EATON ELECTRIC	FAZ6-C4/1	0403824AXX
QF23	Power circuit breaker	230V SECONDARY PROTECTION	=+QE/3.3:G	EATON ELECTRIC	FAZ6-C2/1	0403819AXX
QS1	Disconnect switch	MAIN SWITCH	=+QE/1.1:E	SOCOMEC	Sirco M80	0402331AXX
QS1	Operation	=	=+QE/1.1:E	SOCOMEC	Y/R 16-80A	0402333AXX
RR1	Scaldiglia 200W 230V	HEATER E.P.	=+QE/6.4:D	EZM	091187	5729759AXX
ST1	SENSOR NTC WH IP68 -50T105 CABLE 1,5M	CABINET TEMPERATURE	=+QE/5.3:E	CAREL	NTC015WH01	NTC015WH01
TC1	TRANSFORMER	TRANSFORMER	=+QE/3.2:D		400V-230V 310VA//24V 60AV - 230V 250VA	0910244AXX

BOM external panel

EsternoQE_F01_003

Place	Short name	Function text	Position	Technical characteristics
+EXT	M1.1	Fan	=+QE/1.4:I	
+EXT	M2.1	=	=+QE/1.6:I	
+EXT	M3.1	=	=+QE/1.8:I	
+EXT	M4.1	=	=+QE/2.1:I	
+EXT	M5.1	=	=+QE/2.3:I	
+EXT	M6.1	=	=+QE/2.4:I	
+EXT	M7.1	=	=+QE/2.6:I	
+EXT	M8.1	=	=+QE/2.8:I	
+EXT	ST1	SIGNAL FOR FANS	=+QE/5.2:I	
+EXT	ST2	EXTERNAL AIR TEMP	=+QE/5.3:I	
+EXT	ST3	SIGNAL FOR FANS REGULATOR	=+QE/5.4:I	